News Release

National Aeronautics and
Space Administration

Washington, DC 20546
(202) 358-1600

For Release

July 5, 1995

Ed Campion
Headquarters, Washington, DC
(Phone: 202/358-1780)

Kari Fluegel
Johnson Space Center, Houston, TX
(Phone: 713/483-5111)

NOTE TO EDITORS: N95-46

SPACE SHUTTLE MISSION STS-69 BRIEFINGS SET FOR JULY 10 & 12

Pre-flight press briefings will be held July 10 and 12 for Space Shuttle mission STS-69, scheduled for launch in the next several weeks.

The mission will mark the second flight of the Wake Shield Facility (WSF), a saucer-shaped satellite that will fly free of the Shuttle for several days, growing thin films in a near perfect vacuum created by the wake of the satellite as it moves through space. The WSF flew previously on STS-60 in February 1994.

In addition to the WSF deploy and retrieval, Commander David M. Walker (Captain, USN) and his crewmates will deploy and retrieve the Spartan 201 astronomy satellite during the flight, as well as perform a number of other experiments. Mission Specialists James S. Voss (Lt. Col, USA) and Michael L. Gernhardt will conduct a six-hour spacewalk during the mission to test assembly techniques for the international Space Station, and to test thermal improvements made to space suits used during space walks.

The pre-flight briefings will allow two-way question and answer capability from all participating NASA Centers.

- more -

Following is the briefing schedule (All times are EDT):

July 10, 1995

9 a.m. **Mission Overview** (originating from JSC)
Jeff Bantle, STS-69 Lead Flight Director

10 a.m. **Wake Shield Facility** (originating from JSC)
Dr. Raymond Gavert, Wake Shield Facility Program Manager, NASA HQ
Alex Ignatiev, Wake Shield Facility Program Manager

11 a.m. **Spartan 201** (originating from GSFC)
Craig Tooley, Spartan 201 Mission Manager
Dick Fisher, Spartan 201 Principle Investigator

1 p.m. **International Extreme Ultraviolet Hitchhiker** (originating from GSFC)
Gerry Daelemans, IEH-1 Mission Manager
Dr. Bill Sandel, UVSTAR Co-Principle Investigator
Dr. Roberto Stalio, UVSTAR Principle Investigator
Dr. Darrell Judge, SEH Principle Investigator
Dr. Charlie Pike, GLO Scientist

2 p.m. **Capillary Pumped Loop/Thermal Energy Storage** (originating from GSFC)
Chris Dunker, CAPL/Gas Bridge Assembly Mission Manager
Dr. Jentung Ku, CAPL Principle Investigator
Carol Tolbert, TES Principle Investigator

2:45 p.m. **Getaway Special Canisters** (originating from GSFC)
Charlie Knapp, GAS Technical Manager
Lee Shiflett, GAS Technical Manager
Scherwin Beck, G-726 Experimenter

3 p.m. **Extravehicular Activity Overview** (originating from JSC)
Jerry Miller, STS-69 Lead Flight Controller
Tim Brady, Lead Hardware Developer

4 p.m. **Secondary Payloads** (originating from JSC)
Dr. Raymond Gavert, Space Processing Division, NASA HQ
Gary Deardorff, EPICS Project Engineer

July 12, 1995

10 a.m. **STS-69 Crew News Conference** (originating from JSC)
David M. Walker, Commander
Kenneth D. Cockrell, Pilot
James S. Voss, Payload Commander/Mission Specialist 1
James H. Newman, Mission Specialist 2
Michael L. Gernhardt, Mission Specialist 3

NASA Television will carry all briefings live on Spacenet 2, Transponder 5, Channel 9 at 69 degrees West longitude. The transponder frequency is 3880 MHz and the audio subcarrier is 6.8 MHz. The polarization is horizontal.

- end -

NASA press releases and other information are available automatically by sending an Internet electronic mail message to domo@hq.nasa.gov. In the body of the message (not the subject line) users should type the words "subscribe press-release" (no quotes). The system will reply with a confirmation via E-mail of each subscription. A second automatic message will include additional information on the service. Questions should be directed to (202) 358-4043.

Video Advisory

National Aeronautics and
Space Administration

Washington, DC 20546
(202) 358-1600

For Release

July 5, 1995

David E. Steitz
Headquarters, Washington, DC
(Phone: 202/358-1730)

VIDEO ADVISORY: V95-98

SHUTTLE MISSION PREPARES FOR FRIDAY LANDING

NASA Television will continue to provide live coverage of the STS-71 Space Shuttle Atlantis mission until the landing of the Orbiter, currently scheduled for 10:56 a.m. EDT Friday, July 7, at the Kennedy Space Center, FL.

(All times EDT) **THURSDAY MISSION HIGHLIGHTS**

2:32 a.m. **CREW WAKE UP**

12 p.m. **MISSION UPDATE**
Live review of the day's mission highlights from the Johnson Space Center, Houston

1 p.m. **MISSION STATUS BRIEFING**
Live mission status briefing with NASA officials, from Houston

4, 8 p.m. **FLIGHT DAY VIDEO FILE**
A replay of the day's video highlights

6:32 p.m. **CREW SLEEP BEGINS**

During STS-71, media may obtain updates by contacting the following NASA Newsrooms:

Mission operations	Johnson Space Center, Houston	713/483-5111
Shuttle landing operations	Kennedy Space Center, FL	407/867-2468

A World Wide Web Space Shuttle home page is available on the Internet. The URL is:

http://shuttle.nasa.gov

Media are encouraged to visit the Shuttle home page for extensive background material and real-time information about the Shuttle-Mir docking mission. Included at the Shuttle home page is information on Shuttle sighting opportunities for major cities around the world during the STS-71 mission.

NASA Television is broadcast on Spacenet 2, transponder 5, channel 9, C-Band, located at 69 degrees West longitude, with horizontal polarization. Frequency will be on 3880.0 megahertz, with audio on 6.8 megahertz.

-end-

News Release

National Aeronautics and
Space Administration

Washington, DC 20546
(202) 358-1600

For Release

July 6, 1995

Lisa Malone
Kennedy Space Center, FL
(Phone: 407/867-2468)

Kyle Herring
Johnson Space Center, Houston
(Phone: 713/483-5111)

NOTE TO EDITORS: N95-47

SHUTTLE LANDING, POST-MISSION BRIEFINGS ON NTV FRIDAY

NASA Television will air briefings with mission officials and the heads of the U.S. and Russian Space programs following the planned landing of Space Shuttle Atlantis Friday.

There are two opportunities for the Shuttle landing in Florida on Friday, weather permitting. The first opportunity is at 10:55 a.m. EDT and the second is at 12:31 p.m. EDT.

Approximately one hour after touch down, a post-landing press conference originating from Johnson Space Center will be held with Space Shuttle Program Director Brewster Shaw, STS-71 Entry Flight Director Wayne Hale, and Mission Scientist Tom Sullivan. Two-way Q&A capability will be available to reporters at participating NASA Centers.

Immediately following that briefing, NASA Administrator Daniel S. Goldin and RSA General Director Yuri Koptev will meet with reporters at the Kennedy Space Center, FL, press site auditorium. Due to time constraints, questions will originate from media at the Kennedy Space Center only for this briefing.

NASA Television is broadcast on Spacenet 2, transponder 5, channel 9, C-Band, located at 69 degrees West longitude, with horizontal polarization. Frequency will be on 3880.0 megahertz, with audio on 6.8 megahertz.

-end-

News Release

National Aeronautics and
Space Administration

Washington, DC 20546
(202) 358-1600

Don Nolan-Proxmire
Headquarters, Washington, DC
(Phone: 202/358-1983)

Keith Henry
Langley Research Center, Hampton, VA
(Phone: 804/864-6120)

Jeff Thal
FAA Headquarters, Washington, DC
(Phone: 202/267-7344)

For Release
July 6, 1995

RELEASE: 95-107

NASA/FAA ANNOUNCE GENERAL AVIATION DESIGN COMPETITION

NASA and the FAA are sponsoring a General Aviation Design Competition for students at U.S. aeronautical and engineering universities to address design challenges for general aviation aircraft and related transportation systems.

The competition, in its second year, allows undergraduate and graduate students working with faculty advisors to participate in a national effort to develop technologies for a small aircraft transportation system. The competition also is intended to help raise student awareness of the economic relevance of general aviation and its value for business and personal use. NASA and the FAA want to increase the involvement of the academic community in the revitalization of the U.S. general aviation industry while providing real-world design and development opportunities for students.

Student teams will be challenged to develop system design innovations in one or more of the following technical areas: integrated cockpit systems; propulsion; integrated design and manufacturing; aerodynamics and operating infrastructure. Design packages will be reviewed by a panel of industry and government experts who will provide feedback to the teams.

Design packages are due by May 6, 1996. An award of $5,000 will be given to the university academic department of the first place winner, with $3,000, $2,000 and $1,000 awards respectively given to the second, third and fourth place design teams.

Winners will be presented with their awards at the annual Experimental Aircraft Association Fly-In Convention and Sport Aviation Exhibition in Oshkosh, WI, in July 1996.

-more-

The competition was created in response to NASA Administrator Daniel S. Goldin's challenge to tap engineering talent within universities and FAA Administrator David Hinson's policy supporting general aviation innovation. The competition is being coordinated by the Virginia Space Grant Consortium, a nonprofit aerospace educational coalition, in Hampton, VA.

General aviation has proven to be an important contributor to the economic well-being of the U.S. Presently, the 212,000 general aviation aircraft in service comprise 62 percent of all U.S. flight hours, 37 percent of all flight miles, and 78 percent of all departures in our country. General aviation provides 540,000 U.S. jobs and $40 billion of economic input annually.

The U.S. general aviation industry, however, has declined steadily over the past 15 years. In 1978, a record number of 18,000 new general aviation aircraft were delivered by U.S. manufacturers. Only 800 deliveries of new general aviation aircraft were recorded last year. Moreover, the typical general aviation aircraft type is about 30 years of age and uses old technology. Flight deck systems used on present-day general aviation range from the 1950s to the 1990s, with some piston propulsion systems dating back to the 1950s.

-end-

NASA press releases and other information are available automatically by sending an Internet electronic mail message to domo@hq.nasa.gov. In the body of the message (not the subject line) users should type the words "subscribe press-release" (no quotes). The system will reply with a confirmation via E-mail of each subscription. A second automatic message will include additional information on the service. Questions should be directed to (202) 358-4043.

Video Advisory

National Aeronautics and
Space Administration

Washington, DC 20546
(202) 358-1600

For Release

July 9, 1995

David E. Steitz
Headquarters, Washington, DC
(Phone: 202/358-1730)

VIDEO ADVISORY: V95-99 *ATTENTION: NEWS WEATHER DEPARTMENT*

THUNDERSTORM RESEARCH, UPCOMING MISSION ON NTV

Monday's NASA TV news file will feature pieces on elements of thunderstorms that scientists are only now beginning to understand. Elements known as sprites and jets have been observed during thunderstorms. Sprites are very short duration optical flashes that extend into the ionosphere during storms. Blue jets are fountains propagating from the top of thunderstorms at speeds of 60 miles per second. Interviews with crewmembers of the upcoming STS-70 Shuttle mission will close out Monday's feed. *The transmission times for the video news file are noon, 3 p.m., 6 p.m. and 9 p.m. EDT.*

ITEM #1: Arkansas Thunderstorm **TRT: 3:20**
Footage of a severe thunderstorm over Arkansas from June 1994.

ITEM #2: Color Television Image of Red Sprite **TRT: :15**
Color image of a sprite observed over a thunderstorm in the Midwest.

ITEM #3: Image of a Blue Jet **TRT: :15**
A blue jet shooting upwards from a thunderstorm's top reach.

ITEM #4: National Lightening Detection Map **TRT: :15**
A map that tracks ground strokes during the period of blue jets.

ITEM #5: Interview with Rick Howard **TRT: 2:20**
Howard explains the importance and mystery of sprites and blue jets.

ITEM #6: Crew Bail Out Training **TRT: 4:51**
The Discovery crew prepare for next Thursday's Shuttle mission.

ITEM #7: Cockpit Simulation Training **TRT: 2:51**
Members of the STS-70 crew training in the Shuttle Simulator.

ITEM #8: Interview with Commander Tom Henricks **TRT: 4:18**
Henricks discusses his role as STS-70 mission commander.

ITEM #9: Interview with Pilot Kevin Kregel **TRT: 4:50**
Kregel will pilot Discovery during STS-70

ITEM #10: Interview with Mission Specialist Nancy Currie **TRT: 7:15**
Currie will be a mission specialist aboard STS-70.

NASA Television is broadcast on Spacenet 2, transponder 5, channel 9, C-Band, located at 69 degrees West longitude, with horizontal polarization. Frequency will be on 3880.0 megahertz, with audio on 6.8 megahertz.

-end-

Video Advisory

National Aeronautics and
Space Administration

Washington, DC 20546
(202) 358-1600

For Release

July 10, 1995

David E. Steitz
Headquarters, Washington, DC
(Phone: 202/358-1730)

VIDEO ADVISORY: V95-100

GALILEO PREPARES FOR PROBE DEPLOY THURSDAY

Tuesday's NASA TV news file will feature pieces reviewing the Galileo space probe's upcoming encounter with Jupiter, due to occur in December. On Thursday, Galileo will release the probe that will enter Jupiter's atmosphere to gain new data on the massive planet. Interviews with crewmembers and scientists on the upcoming STS-70 Shuttle mission will close out Tuesday's feed. *The transmission times for the video news file are noon, 3 p.m., 6 p.m. and 9 p.m. EDT.*

ITEM #1: Galileo Jupiter Encounter **TRT: :30**
Animation sequence of Galileo probe descent into Jupiter's atmosphere.

ITEM #2: Galileo Probe Animation **TRT: 2:18**
Animation of Galileo probe separation from spacecraft and atmospheric entry.

ITEM #3: Interview with Dr. Richard Young **TRT: 2:00**
Dr. Young discusses the importance of studying Jupiter using Galileo.

ITEM #4: New Mission Control Center in Houston **TRT: 2:00**
A tour of the New Mission Control Center, which will be used during the STS-70 mission.

ITEM #5: New Tracking and Data Relay Satellite Ground Terminal **TRT: 3:00**
The new ground terminal which will be used by the satellite being deployed on STS-70.

ITEM #6: Interview with Jim Gavura **TRT: 1:00**
Gavura, White Sands Ground Terminal Director, discusses the new facility.

ITEM #7: Interview with Kenneth Osbourne **TRT: 1:00**
Osbourne, Director of Operations for the new terminal, discusses the STS-70 mission.

ITEM #8: Interview with Donald Thomas **TRT: 5:14**
Thomas will be a mission specialist aboard STS-70.

ITEM #9: Interview with Mary Ellen Weber **TRT: 6:01**
Weber also will be a mission specialist aboard STS-70.

NASA Television is broadcast on Spacenet 2, transponder 5, channel 9, C-Band, located at 69 degrees West longitude, with horizontal polarization. Frequency will be on 3880.0 megahertz, with audio on 6.8 megahertz.

-end-

Video Advisory

National Aeronautics and
Space Administration

Washington, DC 20546
(202) 358-1600

For Release

July 11, 1995

David E. Steitz
Headquarters, Washington, DC
(Phone: 202/358-1730)

VIDEO ADVISORY: V95-101

IMPROVED SHUTTLE ENGINES SET TO LAUNCH ON THURSDAY

Wednesday's NASA TV news file will review new super-tough ceramic bearings that will improve reliability of Space Shuttle engines. The new bearings will fly for the first time during Thursday's launch of STS-70. The 30th anniversary of Mariner 4, an upcoming test of a modified F-16XL aircraft, and previews of Thursday's Space Shuttle mission also will be aired. *The transmission times for the video news file are noon, 3 p.m., 6 p.m. and 9 p.m. EDT.*

ITEM #1: Improved Shuttle Engine Bearing **TRT: 3:00**
A new bearing that enhances the Shuttle's engine reliability will fly on STS-70.

ITEM #2: Interview with Robert Schwinghamer **TRT: 4:00**
Schwinghamer explains how the new bearing designs are lighter and smoother, therefore more efficient.

ITEM #3: Interview with Dr. Robert Thom **TRT: 2:28**
Thom discusses the benefits of using silicon-nitride in bearing manufacturing.

ITEM #4: Mariner 4 Anniversary **TRT: 3:00**
Footage from the Mariner 4 mission to commemorate it's 30th anniversary, July 14.

ITEM #5: Supersonic Flight Testing **TRT: 3:00**
Preparations underway to test a new wing "glove" to control laminar flow. Improved laminar flow control would enable planes to fly on less fuel with smaller engines.

ITEM #6:	**REPEAT: Crew Bailout Training**	**TRT: 4:51**
ITEM #7:	**REPEAT: Cockpit Simulation Training**	**TRT: 2:51**
ITEM #8:	**REPEAT: New Mission Control Center in Houston**	**TRT: 2:00**
ITEM #9:	**REPEAT: New TDRS Ground Terminal**	**TRT: 3:00**
ITEM #10:	**REPEAT: Interview with Jim Gavura**	**TRT: 1:00**
ITEM #11:	**REPEAT: Interview with Kenneth Osbourne**	**TRT: 1:00**
ITEM #12:	**REPEAT: Galileo Jupiter Encounter**	**TRT: :30**
ITEM #13:	**REPEAT: Galileo Probe Animation**	**TRT: 2:18**
ITEM #14:	**REPEAT: Interview with Dr. Richard Young**	**TRT: 2:00**

NASA Television is broadcast on Spacenet 2, transponder 5, channel 9, C-Band, located at 69 degrees West longitude, with horizontal polarization. Frequency will be on 3880.0 megahertz, with audio on 6.8 megahertz.

-end-

News Release

National Aeronautics and
Space Administration
Washington, DC 20546
(202) 358-1600

For Release

Douglas Isbell
Headquarters, Washington, DC
(Phone: 202/358-1753)

July 11, 1995

Franklin O'Donnell
Jet Propulsion Laboratory, Pasadena, CA
(Phone: 818/354-5011)

Diane Farrar
Ames Research Center, Mountain View, CA
(Phone: 415/604-3934)

RELEASE: 95-108

GALILEO TO RELEASE JUPITER ATMOSPHERIC PROBE

A rugged, conical-shaped probe will separate from NASA's Galileo spacecraft later this week and head for Jupiter's cloud tops, the first time in history a human-made object will enter the atmosphere of an outer planet in our solar system.

The probe and its payload of scientific instruments will be deployed from the main Galileo spacecraft at 1:30 a.m. EDT July 13 and fly solo the remaining 51 million miles to Jupiter over the next five months. Confirmation of the release will be received 37 minutes later, the time necessary for the radio signal to travel back to Earth at the speed of light.

The 747-pound probe will slam into the giant gas planet's atmosphere on Dec. 7, 1995, then begin a parachute descent toward the planet, where it will make the first-ever measurements within Jupiter's atmosphere.

Designed to survive the highest impact speed ever achieved by a human-made object (106,000 mph), Galileo's atmospheric probe should provide extraordinary new details about Jupiter's chemical makeup and atmospheric dynamics.

At separation, Galileo will be 412 million miles from Earth and on a flight path headed toward the probe's aimpoint in Jupiter's atmosphere. Before the

-more-

separation, controllers will line up Galileo's spin axis so that it is pointed along the path the probe will take as it enters Jupiter's atmosphere, and spin up the combined spacecraft and probe to 10.5 rpm. The spin stabilizes the probe's attitude, or orientation in space, as it flies toward Jupiter.

In the sequence of events leading to probe release, ground controllers and Galileo's onboard systems are sending a series of commands to prepare the probe for its mission. These include programming the probe's coast timer, an onboard clock that will "wake up" the probe's systems and scientific instruments six hours before it enters Jupiter's atmosphere.

After completing checks of command, data, power and other subsystems, a built-in cable cutter has severed the umbilical between the atmospheric probe and Galileo. Before deployment, small explosive charges on nuts that secure the probe to Galileo will detonate to free the probe. Three small springs will gently push the probe away from the main spacecraft, sending it on the last leg of its voyage to Jupiter.

Two weeks later, on July 27, Galileo is scheduled to fire its main engine to deflect its own course toward an orbit high above Jupiter's cloud tops. The probe and main spacecraft will communicate again on Dec. 7 as the descending probe transmits its data to the Galileo spacecraft, where it will be recorded for later broadcast back to Earth. The probe will send data to the Galileo orbiter for up to 75 minutes.

The ultimate fate of the probe may be determined by its battery lifetime, or it may succumb to either the high temperatures or the immense pressure of Jupiter's atmosphere. Galileo, meanwhile, will begin two years of close-up studies of Jupiter, its moons, rings and powerful magnetic environment as it orbits the planet.

Galileo was launched in October 1989 aboard the Space Shuttle Atlantis, and has flown by Venus, Earth (twice), and two asteroids during its trip to the outer solar system.

- end -

Video Advisory

National Aeronautics and
Space Administration

Washington, DC 20546
(202) 358-1600

For Release

July 12, 1995

David E. Steitz
Headquarters, Washington, DC
(Phone: 202/358-1730)

VIDEO ADVISORY: V95-102

SPACE SHUTTLE DISCOVERY LAUNCH ON NASA TV THURSDAY

The Space Shuttle Discovery is set for launch on Thursday morning at 9:41 a.m. EDT from the Kennedy Space Center, FL. Discovery and the STS-70 crew will carry into space and deploy a Tracking and Data Relay Satellite (TDRS), as well as perform numerous microgravity space science experiments. NASA TV will provide live coverage of the mission from launch through landing.

LAUNCH DAY HIGHLIGHTS

(All times EDT)

5 a.m.	**LIVE COVERAGE OF LAUNCH ACTIVITIES BEGINS**
9:41 a.m.	**LAUNCH** (launch window extends until approximately 12:11 p.m. EDT)
1p.m.	**MISSION UPDATE** Live review of the day's mission highlights from the Johnson Space Center, Houston
3:53 p.m.	**TDRS DEPLOY** (not televised live)
5:41 p.m.	**VIDEOTAPE DOWNLINK REPLAY OF TDRS DEPLOY**
7:00 p.m., 12 a.m.	**FLIGHT DAY VIDEO FILE** A replay of the day's video highlights
8:11 p.m.	**CREW SLEEP BEGINS**

During the STS-70 mission, media may obtain mission updates by contacting the following NASA Newsrooms:

Shuttle launch and landing operations	Kennedy Space Center, FL	407/867-2468
During mission	Johnson Space Center, Houston	713/483-5111

NASA Television is broadcast on Spacenet 2, transponder 5, channel 9, C-Band, located at 69 degrees West longitude, with horizontal polarization. Frequency will be on 3880.0 megahertz, with audio on 6.8 megahertz.

-end-

News Release

National Aeronautics and
Space Administration

Washington, DC 20546
(202) 358-1600

For Release

July 12, 1995

Douglas Isbell
Headquarters, Washington, DC
(Phone: 202/358-1753)

RELEASE: 95-110

DIAZ NAMED TO LEAD PLANNING EFFORT FOR SCIENCE INSTITUTES

NASA Administrator Daniel Goldin has named Alphonso Diaz, NASA Deputy Associate Administrator for Space Science, to lead the development of plans for the Science Institutes proposed by the U.S. space agency. Diaz will define the scope and organizational framework of the institutes, including their staffing and financial requirements, and will report directly to the administrator, effective immediately.

NASA officials have previously announced plans in conjunction with the Zero Base Review to create Science Institutes to help streamline the agency's management structure and improve the quality of its scientific research. As envisioned by NASA, the institutes would be privatized arrangements in which government-owned assets are managed by an external entity, such as a university, an industrial organization or a consortium.

Two institutes are being defined at this time as pathfinders for institutes in other areas of science and technology that NASA may establish in the future. An institute affiliated with NASA Johnson Space Center in Houston would conduct biomedical research, and one affiliated with NASA Ames Research Center in Mountain View, CA, would focus on research related to the origins and evolution of life, and planetary biology.

"These institutes are an excellent way to simultaneously invigorate the peer review process and broaden our ties to the scientific community," Goldin said. "This should lead to the highest quality space science in the decades to come. I am pleased with the enthusiastic response to this concept that we've received, both internally and externally."

Supported by representatives from the relevant offices at NASA Headquarters and the Field Centers, the initial planning effort is expected to take approximately 90 days. Once NASA has consulted with the Administration and Congress, and secured appropriate authority, the Agency will inform interested parties about how to become formally involved as the plan is implemented.

-more-

"The effort is expected to include reviews of similar organizations, looking for successful models that can be adapted by NASA to guide the increasingly international and collaborative nature of space science," Diaz said.

-end-

NASA press releases and other information are available automatically by sending an Internet electronic mail message to **domo@hq.nasa.gov**. *In the body of the message (not the subject line) users should type the words* **subscribe press-release**. *The system will reply with a confirmation via E-mail of each subscription. A second auto message will include additional information on the service. Questions should be directed to (202) 358-4043.*

News Release

National Aeronautics and
Space Administration

Washington, DC 20546
(202) 358-1600

For Release

Douglas Isbell
Headquarters, Washington, DC
(Phone: 202/358-1753)

July 13, 1995

Franklin O'Donnell
Jet Propulsion Laboratory, Pasadena, CA
(Phone: 818/354-5011)

Diane Farrar
Ames Research Center, Mountain View, CA
(Phone: 415/604-3934)

RELEASE: 95-111

GALILEO'S JUPITER ATMOSPHERIC PROBE SUCCESSFULLY RELEASED

Packed like an interplanetary paratrooper, the atmospheric probe aboard NASA's Galileo mission successfully sprang loose from the main spacecraft early this morning and began its long, five-month free-fall toward Jupiter.

"We're delighted to have successfully released the probe on its Jupiter atmospheric mission after having carried it for almost six years," said Galileo Project Manager William O'Neil at NASA's Jet Propulsion Laboratory (JPL), Pasadena, CA.

Data from Galileo received shortly after 2:07 a.m. EDT confirmed that the probe release went as planned. "The probe is configured for its encounter with Jupiter and is on its way," said Marcie Smith, manager of the probe mission at NASA's Ames Research Center, Mountain View, CA. "We're very excited to have the probe mission underway."

The probe's flight across the remaining 51 million miles to Jupiter will end abruptly on Dec. 7, 1995 when it slams into the giant gas planet's atmosphere. After hitting the top of Jupiter's atmosphere at the highest impact speed (106,000 mph) ever achieved by a human-made object, the rugged probe will unfurl its main parachute and float downward. Seven onboard instruments will directly measure for the first time Jupiter's chemical make-up, winds, clouds and lightning. The probe will radio its data to the Galileo spacecraft for up to 75 minutes.

-more-

The probe mission is likely to end when the main Galileo spacecraft passes beyond radio contact with the probe as the spacecraft enters Jupiter orbit. The ultimate fate of the probe may be determined by its battery lifetime, or it may first succumb to the immense pressure of Jupiter's atmosphere and be crushed. Galileo, meanwhile, will begin two years of close-up studies of Jupiter, its moons, rings and powerful magnetic environment.

On July 27, Galileo will fire its main engine to deflect its own course toward an orbit high above Jupiter's cloud tops.

The overall Galileo mission is managed for NASA's Office of Space Science, Washington, DC, and by NASA's Jet Propulsion Laboratory, Pasadena, CA. Galileo's atmospheric probe is managed by the Ames Research Center, Mountain View, CA.

- end -

NOTE TO EDITORS: Images depicting the Galileo probe and its atmospheric entry at Jupiter are available to news media representatives by calling the Headquarters photo library at 202/358-1900. Photo numbers are:

Color:	Black & White:
87-HC-264	87-H-310
95-HC-365	95-H-375
95-HC-366	95-H-376

NASA press releases and other information are available automatically by sending an Internet electronic mail message to domo@hq.nasa.gov. In the body of the message (not the subject line) users should type the words "subscribe press-release" (no quotes). The system will reply with a confirmation via E-mail of each subscription. A second automatic message will include additional information on the service. Questions should be directed to 202/358-4043.

News Release

National Aeronautics and
Space Administration

Washington, DC 20546
(202) 358-1600

Douglas Isbell
Headquarters, Washington, DC
(Phone: 202/358-1753)

Diane Ainsworth
Jet Propulsion Laboratory, Pasadena, CA
(Phone: 818/354-5011)

For Release
July 14, 1995

RELEASE: 95-112

NASA NAMES FIRST ROVER TO EXPLORE THE SURFACE OF MARS

On the 30th anniversary of robotic exploration of Mars, NASA has selected the name "Sojourner" for the first rover slated to explore the Red Planet. The 25-pound, six-wheeled robotic explorer is now being readied for launch, and will be deployed to roam across an ancient Martian flood plain after the Mars Pathfinder lander touches down on the planet's surface on July 4, 1997.

The U.S. spacecraft Mariner 4 initiated humanity's study of the Red Planet 30 years ago today when it flew by Mars at a distance of about 6,000 miles on July 14, 1965, taking the first close-up images of another planet.

The name Sojourner was chosen for the Mars Pathfinder rover after a year-long, worldwide competition in which students up to 18 years old were invited to select a heroine and submit an essay about her historical accomplishments. The students were asked to address in their essays how a planetary rover named for their heroine would translate these accomplishments to the Martian environment.

Initiated in March 1994 by The Planetary Society of Pasadena, CA, in cooperation with NASA's Jet Propulsion Laboratory (JPL), the contest got under way with an announcement in the January 1995 issue of the National Science Teachers Association's magazine "Science and Children," which is circulated to 20,000 teachers and schools across the nation.

Valerie Ambroise, 12, of Bridgeport, CT, submitted the winning essay about Sojourner Truth, an African-American reformist who lived during the Civil War era. An abolitionist and champion of women's rights, Sojourner Truth, whose legal name was Isabella Van Wagener, made it her mission to "travel up and down the land," advocating the rights of all people to be free and the rights of women to participate fully in society. The name Sojourner was selected because it means "traveler."

-more-

JPL scientists and engineers working on the Mars Pathfinder project and Planetary Society staff members reviewed the 3,500 total entries received from all over the world, including essays from students living in Canada, India, Israel, Japan, Mexico, Poland and Russia. Nearly 1,700 of the essays were submitted by students aged 5 to 18 years old.

The selection of winners from this group by representatives from JPL and NASA Headquarters was based on several factors: the quality and creativity of the essay, taking into consideration the age of each contestant; the appropriateness of the name for a Mars rover; and the knowledge of the heroine and the understanding of the Pathfinder rover's mission conveyed in the essay.

The second place prize winner was Deepti Rohatgi, 18, of Rockville, MD, who proposed naming the rover after Marie Curie, a Polish-born chemist who won the Nobel Prize in 1911 for her discovery of the elements radium and polonium. The third place prize went to Adam Sheedy, 16, of Round Rock, TX, who chose the late astronaut Judith Resnik as his namesake for the new rover.

Other popular names included Sacajewea, who explored North America with Lewis and Clark; Amelia Earhart, one of the first female aviators; Athena, the Greek goddess of wisdom; Harriet Tubman, a 19th-century African-American writer and political reformist; Greek goddesses Minerva and Atalanta; and Thumbelina, the tiny fairy tale character created by Hans Christian Andersen.

The Mars Pathfinder lander and rover will be launched in December 1996 aboard a Delta rocket and then will spend seven months cruising to Mars. The mission will demonstrate a new, low-cost way of entering a planetary atmosphere and landing, through a combination of parachutes, rockets and shock-absorbing airbags designed to slow the spacecraft's descent and place it safely on the surface. Once Mars Pathfinder lands and opens its exterior panels, the solar-powered rover will be sent off to explore the chemistry of rocks in the area and other features of the planet's rocky surface.

Mars Pathfinder is part of NASA's Discovery program, a new generation of low-cost spacecraft designed to explore the solar system. The mission is managed by the Jet Propulsion Laboratory for NASA's Office of Space Science and Office of Space Access and Technology, Washington, DC.

-end-

EDITOR'S NOTE: Images to illustrate this release are available for news media representatives by calling the Headquarters Photo Library on 202/358-1900. Photo numbers are:

	Color	**B&W**
Still photos:	95-HC-368	95-H-378
Artist's Concept of Mars Pathfinder:	95-HC-369	95-H-379

News Release

National Aeronautics and
Space Administration

Washington, DC 20546
(202) 358-1600

For Release

July 18, 1995

Don Nolan-Proxmire
Headquarters, Washington, DC
(Phone: 202/358-4727)

Keith Henry
Langley Research Center, Hampton, VA
(Phone: 804/864-6120)

RELEASE: C95-j

MCDONNELL DOUGLAS SELECTED TO NEGOTIATE FOR AERONAUTICS CONTRACT

NASA's Langley Research Center, Hampton, VA, has selected McDonnell Douglas Aerospace, Long Beach, CA, for negotiation of a $160 million contract in support of the NASA Advanced Composites Technology Program.

Under the eight-year contract, McDonnell Douglas will design, develop and verify a full-scale composite wing. The wing will be made of a lightweight yet durable material, in place of standard aluminum. If tests are successful, composite wings could be used on commercial aircraft, reducing weight and cost, and meeting safety standards. The work will be conducted at the McDonnell Douglas plants in Long Beach and Huntington Beach, CA, and St. Louis, MO, from 1995 to 2002.

The major goals of the contract are to verify innovative new wing technology through design, fabrication and testing of structural elements, sub-components, a 40-foot long semi-span wing component and a full-scale wing box. All new manufacturing technology for composite structures will be directly transferred to other U.S. aircraft builders.

NASA has been developing composite primary wing structures under the Advanced Composites Technology Program, which began in 1989. The McDonnell Douglas contract results are expected to provide the technical data for the application of composite wing structures for 21st century commercial transport aircraft.

- end -

NASA press releases and other information are available automatically by sending an Internet electronic mail message to domo@hq.nasa.gov. In the body of the message (not the subject line) users should type the words "subscribe press-release" (no quotes). The system will reply with a confirmation via E-mail of each subscription. A second automatic message will include additional information on the service. Questions should be directed to (202) 358-4043.

News Release

National Aeronautics and
Space Administration

Washington, DC 20546
(202) 358-1600

For Release

July 18, 1995

Brian Welch
Headquarters, Washington, DC
(Phone: 202/358-1600)

Lisa Malone
Kennedy Space Center, FL
(Phone: 407/867-2468)

NOTE TO EDITORS: N95-49

AUGUST 5 SET AS LAUNCH DATE FOR NEXT SPACE SHUTTLE MISSION

NASA managers have selected Aug. 5 as the official launch date for the next Space Shuttle mission, STS-69, pending resolution of open items including the post flight assessment of an anomaly on one of the STS-71 solid rocket booster nozzle joints.

The 11-day mission will feature the second flight of the Wake Shield Facility (WSF), a saucer-shaped satellite that will fly free of the Shuttle for several days. The WSF will grow thin films in a near perfect vacuum created by the wake of the satellite as it moves through space. The crew also will deploy and retrieve the Spartan 201 astronomy satellite, perform a six-hour spacewalk to test assembly techniques for the international Space Station and test thermal improvements made to space suits used during space walks.

The commander for the mission is three-time Shuttle veteran David Walker and the pilot is Kenneth Cockrell, making his second flight. The three mission specialists are James Voss, flying for the third time, James Newman making his second flight, and Michael Gernhardt making his first flight.

The Shuttle Endeavour is set to liftoff from Launch Pad 39-A at 10:45 a.m. EDT at the opening of a 2 1/2 hour launch window. Landing is planned for Aug. 16 at the Kennedy Space Center, FL.

-end-

NASA press releases and other information are available automatically by sending an Internet electronic mail message to domo@hq.nasa.gov. In the body of the message (not the subject line) users should type the words "subscribe press-release" (no quotes). The system will reply with a confirmation via E-mail of each subscription. A second automatic message will include additional information on the service. Questions should be directed to (202) 358-4043.

Video Advisory

National Aeronautics and
Space Administration
Washington, DC 20546
(202) 358-1600

For Release
July 18, 1995

David E. Steitz
Headquarters, Washington, DC
(Phone: 202/358-1730)

VIDEO ADVISORY: V95-106

SHUTTLE MISSION COVERAGE CONTINUES ON NTV WEDNESDAY

NASA TV will continue coverage of the current STS-70 mission on Wednesday. Space Shuttle Discovery was launched July 13 at 9:41 a.m. EDT from the Kennedy Space Center, FL. NASA TV will continue live coverage of the Discovery mission through landing, scheduled for Friday, July 21 at 7:52 a.m. at the Kennedy Space Center.

(All times EDT) **WEDNESDAY TELEVISION HIGHLIGHTS**

1:00 p.m. **MISSION UPDATE**
Live review of the day's mission highlights from the Johnson Space Center, Houston

2:00 p.m. **MISSION STATUS BRIEFING**
NASA Officials at Houston discuss flight day activities

3:42 p.m. **CREW SLEEP BEGINS**

4:30 p.m. **FLIGHT DAY VIDEO FILE** (replayed at 8 and 10 p.m.)
A replay of the day's video highlights

During the STS-70 mission, media may obtain mission updates by contacting the following NASA Newsrooms:

During mission	Johnson Space Center, Houston	713/483-5111
Shuttle Landing operations	Kennedy Space Center, FL	407/867-2468

NASA Television is broadcast on Spacenet 2, transponder 5, channel 9, C-Band, located at 69 degrees West longitude, with horizontal polarization. Frequency will be on 3880.0 megahertz, with audio on 6.8 megahertz.

-end-

Video Advisory

National Aeronautics and
Space Administration

Washington, DC 20546
(202) 358-1600

David E. Steitz
Headquarters, Washington, DC
(Phone: 202/358-1730)

For Release

July 19, 1995

VIDEO ADVISORY: V95-107

DC-XA, OZONE RESEARCH, APOLLO-SOYUZ ON NTV THURSDAY

Thursday's video news file will open with highlights from the day's Space Shuttle mission activities. Interviews and footage showing the DC-XA experimental rocket, known as the "Delta Clipper," will then be shown. Ozone research, commemoration of the Apollo 11 Moon landing and Apollo-Soyuz 20th anniversary features also will be aired. Following the news file, NASA TV will resume coverage of the current STS-70 mission. Space Shuttle Discovery's landing is scheduled for Friday, July 21 at 7:52 a.m. at the Kennedy Space Center.

(All times EDT) **THURSDAY TELEVISION HIGHLIGHTS**

11:00 a.m. **MISSION STATUS BRIEFING**
NASA Officials at Houston discuss flight day activities

1:00 p.m. **MISSION UPDATE**
Live review of the day's mission highlights from the Johnson Space Center, Houston

3:42 p.m. **CREW SLEEP BEGINS**

4:30 p.m. **VIDEO NEWS FILE**
* Flight day video highlights (TRT: 15:00)
* DC-XA flight footage (TRT: 3:20)
* Interview on DC-XA with Gary Payton (TRT: 3:00)
* Interview on DC-XA with Dave Schweikle (TRT: 3:00)
* Upper Atmosphere Research Satellite Animation (TRT: 3:09)
* Ozone Hole Animation (TRT: 3:00)
* Interview with Dr. Robert Harriss on NASA Ozone Research (TRT: 2:32)
* Discovery Program plan for mapping mission to the Moon (TRT: 2:10)
* Apollo-Soyuz 20th anniversary footage (TRT: 2:50)
* Interview with astronaut Vance Brand on Apollo-Soyuz anniversary (TRT: 4:05)
* Apollo 11 anniversary footage (TRT: 3:00)

During the STS-70 mission, media may obtain mission updates by contacting the following NASA Newsrooms:

During mission	Johnson Space Center, Houston	713/483-5111
Shuttle Landing operations	Kennedy Space Center, FL	407/867-2468

NASA Television is broadcast on Spacenet 2, transponder 5, channel 9, C-Band, located at 69 degrees West longitude, with horizontal polarization. Frequency will be on 3880.0 megahertz, with audio on 6.8 megahertz.

-end-

News Release

National Aeronautics and
Space Administration

Washington, DC 20546
(202) 358-1600

For Release

Don Nolan-Proxmire
Headquarters, Washington, DC
(Phone: 202/358-1983)

July 20, 1995

Michael Mewhinney
Ames Research Center, Mountain View, CA
(Phone: 415/604-3937)

RELEASE: 95-113

NASA AWARDS $7.1 MILLION FOR NEW INTERNET EDUCATION PROJECTS

NASA has awarded $7.1 million to eight proposals for developing new ways to teach science, mathematics, engineering and aeronautics using the Internet.

The eight awards will be given to schools in nine states to develop new information technologies for students in kindergarten through the second year of college (K-14) and vocational education. These awards are funded through the High Performance Computing and Communications (HPCC) Office as part of NASA's Information Infrastructure Technology and Applications (IITA) program.

"We're really excited by the partnerships, diversity of students served, and innovative approaches these projects represent," said Paul Hunter, HPCC program manager at NASA Headquarters, Washington, DC.

"We'll be making substantial contributions to providing 'high-tech' career paths for physically challenged, geographically remote, and economically disadvantaged youth in a variety of social environments around the nation," Hunter said. "We're convinced we'll be demonstrating the capability the Internet offers to Americans everywhere."

The eight projects to be funded by NASA's Education, Training and Lifelong Learning in Aeronautics cooperative agreement notice include:

Student Program for Aeronautics Resources and Knowledge (SPARK): a $300,000 cooperative agreement with the University of Idaho, Moscow, ID. SPARK targets rural, Native American and disadvantaged Idaho youth and their teachers. It integrates aeronautics curriculum into the Upward Bound educational program and seeks to increase student and teacher knowledge of aeronautics.

-more-

The K-8 Aeronautics Internet Textbook: a $1.1 million cooperative agreement with Cislunar Aerospace, Inc., Vallejo, CA, to develop an electronic multimedia text, teachers' supplement and student workbook designed to be used over the Internet in conjunction with the World Wide Web. Participants include a team of classroom teachers from Northern California; St. Joseph's School for the Deaf, New York, NY; PS 102, Brooklyn, NY; St. John's University, Jamaica, NY; the Davis Joint Unified School District, Davis, CA; and the University of California, Davis.

Lego Prototyping in Aeronautics: a $570,000 cooperative agreement with Tufts University, Medford, MA, to integrate science, engineering and computers into a curriculum for K-6 grades that will encourage more students, especially females, to become interested in engineering and science. Students will use computer-operable Lego (tm) components and computers to build and test airplane wing designs while honing skills in design, computers and fundamental physics. Participants include Chapel Hill-Carrboro School District, Chapel Hill, NC; Hastings School, Lexington, MA; and Shady Hill School, Cambridge, MA.

Aviation Academy 2000: a $970,000 cooperative agreement with Wooddale High School, Memphis, TN. This project will use digital computer networking to increase students' math, science, English and technology skills and abilities. This project also will encourage and prepare students for careers in avionics support, aviation ground operations and other advanced aerospace career opportunities. Participants include Memphis City Schools.

An Internet-based Curriculum on Math and Aeronautics for Children with Physical Disabilities: a $1.18 million cooperative agreement with InfoUse, Berkeley, CA. This project will deliver a user-friendly, accessible, on-line interactive math and aeronautics curriculum for fourth through seventh graders with physical disabilities, enabling them to keep up with coursework and to follow high-tech career paths. Participants include the Center for Accessible Technology, Berkeley, CA; Alliance for Technology Access (a nationwide group with headquarters in San Rafael, CA); University of Washington College of Engineering's, "The Disabilities Opportunities Internetworking and Technology Program (DO-IT)," Seattle, WA; and the Communication Enhancement Center at Children's Hospital, Boston, MA.

Aeronautics Learning Laboratory for Science, Technology and Research (ALL STAR) Network: a $1.17 million cooperative agreement with Florida International University to develop an aeronautics curriculum, coursework and software by integrating text, graphics and animation. This aeronautics learning environment targets minority students in grades 4-14. Participants include Prime Technologies Services Corporation, Bethesda, MD, Miami Dade Community College and the Dade County Public Schools.

Aeronautics and Aviation Science Careers and Opportunities: a $730,000 cooperative agreement with the Massachusetts Corporation for Educational Telecommunications, Cambridge, MA. The project uses live, interactive satellite programming and digital computer and telecommunications technology to introduce students and teachers to aeronautics concepts, careers and applications. Participants include demonstration school sites in the greater Boston area; Bridgewater State College, Bridgewater, MA; and the Federal Aviation Administration's New England Regional Office, Burlington, MA.

Sharing Aeronautic Projects Electronically (SHAPE): a $1.04 million cooperative agreement with the Antelope Valley Union High School District, Antelope Valley, CA. SHAPE is designed to motivate and inspire K-12 students to pursue technical careers in math, science and technology through an interactive multimedia curriculum based on current or historical aeronautical events. Participants include the Palmdale School District, Palmdale, CA; Antelope Valley College, Lancaster, CA; PAT Projects, Palmdale, CA; Flight Test Historical Foundation, Lancaster, CA; and Wearls Corporation, Lancaster, CA.

The awards will have a much broader reach than just their home states. For instance, the project with InfoUse of Berkeley, CA, will reach 46 Alliance for Technology Access sites in 37 states, and the project with the Massachusetts Corporation for Educational Telecommunications will link to 100 sites nationally.

The IITA program's goal is to stimulate U.S. economic growth and contribute to the implementation of a national information infrastructure using NASA science, engineering and technology. NASA Headquarters administers the IITA program while NASA's Ames Research Center, Mountain View, CA, provides technical management and coordination of these projects.

- end -

NASA press releases and other information are available automatically by sending an Internet electronic mail message to domo@hq.nasa.gov. In the body of the message (not the subject line) users should type the words "subscribe press-release" (no quotes). The system will reply with a confirmation via E-mail of each subscription. A second automatic message will include additional information on the service. Questions should be directed to (202) 358-4043.

News Release

National Aeronautics and
Space Administration

Washington, DC 20546
(202) 358-1600

For Release

July 20, 1995

Jim Cast
Headquarters, Washington, DC
(Phone: 202/358-1779)

Dom Amatore
Marshall Space Flight Center, Huntsville, AL
(Phone: 205/544-0031)

RELEASE: 95-114

NASA RECEIVES "DC-XA" ROCKET FOR DEVELOPMENT OF RLV TECHNOLOGY

The U.S. Air Force has transferred to NASA's Office of Space Access and Technology the unpiloted, single-stage rocket known as the Delta Clipper-Experimental (DC-X) for use in NASA's Reusable Launch Vehicle (RLV) technology program.

The transfer was made after the successful completion of a series of test flights conducted for the Air Force by McDonnell Douglas at the U.S. Army's White Sands Missile Range in New Mexico. The rocket, renamed the Delta Clipper-Experimental Advanced (DC-XA) by NASA, now will be modified with technology intended for use in the X-33 or X-34 reusable launch vehicles now under development by NASA and its aerospace industry partners.

The DC-XA then will undergo extensive ground and flight testing that will provide valuable information to the X-33 and X-34 programs. Flight testing could begin as early as April 1996 at White Sands.

"We plan to take these new technology components and test them in a real world environment," said NASA's DC-XA project manager Dan Dumbacher of Marshall Space Flight Center, Huntsville, AL. Marshall is the host center for NASA's RLV technology program. "We will demonstrate what it takes to support and operate this single-stage rocket and show its performance in the real world. What we learn by testing the DC-XA will enable us to reduce hardware design changes downstream in the X-33 and X-34 programs. This will save these programs both time and money."

McDonnell Douglas will make the enhancements to the DC-XA in Huntington Beach, CA. Changes include the addition of an aluminum-lithium liquid oxygen tank; a composite (graphite epoxy) liquid hydrogen tank; a composite intertank; and a liquid-to-gas converter assembly in the flight reaction control system. McDonnell Douglas will design and develop most of these components and conduct the flight tests for NASA. They will share some of the costs of the DC-XA. Hardware costs are $20 million and integration costs are $30 million.

-more-

Phillips Laboratory at Kirtland Air Force Base in Albuquerque, NM, will act as NASA's deputy for Flight Test and Operations for the DC-XA. NASA field centers supporting the DC-XA include Marshall; Langley Research Center, Hampton, VA; and the Dryden Flight Research Center, Edwards, CA.

- end -

EDITOR'S NOTE: Images are available to media representatives to illustrate this release by calling the News Branch at 202/358-1900.

NASA photo numbers are: **Color**: 95-HC-361, 95-HC-362, 95-HC-363; **Black & White**: 95-H-371, 95-H-372, 95-H-373.

NASA press releases and other information are available automatically by sending an Internet electronic mail message to domo@hq.nasa.gov. In the body of the message (not the subject line) users should type the words "subscribe press-release" (no quotes). The system will reply with a confirmation via E-mail of each subscription. A second automatic message will include additional information on the service. Questions should be directed to (202) 358-4043.

News Release

National Aeronautics and
Space Administration

Washington, DC 20546
(202) 358-1600

For Release

Brian Dunbar
Headquarters, Washington, DC
(Phone: 202/358-1547)

July 20, 1995

RELEASE: 95-115

NASA-FUNDED RESEARCH SEES FALL OF OZONE-DEPLETING CHEMICAL

NASA-sponsored university research has indicated that levels of an ozone-depleting chemical are falling, the first decrease ever measured of a substance restricted by the Montreal Protocol, an international treaty limiting the production of ozone-depleting chemicals.

The research, led by Dr. Ronald Prinn of the Massachusetts Institute of Technology, Cambridge, MA, showed that concentrations of methyl chloroform have decreased at approximately two percent a year since mid-1990. Until that point, levels had increased approximately four percent a year since 1978.

Concentrations of methyl chloroform are measured from four ground stations around the globe. NASA funded this research through its Upper Atmosphere Research Program, part of its Mission to Planet Earth (MTPE). Results of the study were published in the journal Science last week.

"This is a very important measurement," said Dr. Robert Harriss, head of the Science Division of NASA's Office of Mission to Planet Earth. "We've already seen slowing increases in chlorofluorocarbons and other ozone-depleting chemicals. Now, for the first time, we've actually measured a decrease in one of these chemicals.

"What we're seeing are the effects of the Montreal Protocol and its amendments. Continued monitoring of ozone and the chemicals involved in ozone depletion will be crucial over the next several decades to ensure that the treaties continue to work, so that ozone levels ultimately recover," Harriss said. Scientists believe that under the Montreal Protocol, ozone levels will begin to return to their pre-1980s concentrations early in the next century. The Antarctic "ozone hole" is not expected to subside until at least the middle of the 21st century.

-more-

Monitoring ozone depletion is one of the ongoing programs of MTPE, which studies the Earth as a single global environment. MTPE scientists study how the Earth changes and how human activities contribute to those changes.

-end-

NASA press releases and other information are available automatically by sending an Internet electronic mail message to domo@hq.nasa.gov. In the body of the message (not the subject line) users should type the words "subscribe press-release" (no quotes). The system will reply with a confirmation via E-mail of each subscription. A second automatic message will include additional information on the service. Questions should be directed to (202) 358-4043.

News Release

National Aeronautics and
Space Administration

Washington, DC 20546
(202) 358-1600

For Release

Brian Dunbar
Headquarters, Washington, DC
(Phone: 202/358-1547)

July 20, 1995

David Morse
Ames Research Center, Mountain View, CA
(Phone: 415/604-4724)

RELEASE: 95-116

NASA C-130B AIRCRAFT HELPS FIGHT SCOTTSDALE FIRES

A NASA research aircraft played a critical role in fighting a major fire that threatened life and property in the Scottsdale and Fountain Hills areas of Arizona recently.

The plane, a C-130B based at Ames Research Center, Mountain View, CA, was in the area collecting geological data as part of NASA's Mission to Planet Earth. The plane was equipped with a host of data gathering devices and photographic equipment, including thermal scanners able to penetrate thick smoke and clouds.

Observers on the plane saw the fire while on approach to Phoenix on July 8. Mission manager Chris Jennison obtained clearance from Ames to document the fire and assist local emergency management personnel. Three high altitude flights with the ability to cover a wide area were immediately flown and data was recorded on videotape. These tapes were delivered to Scottsdale officials upon arrival at Sky Harbor airport for the use of the incident commander for the fire, Jeff Whitney.

"NASA played a direct role in controlling the 23,000-acre fire which threatened the communities of Scottsdale and Fountain Hills this weekend," Wilson W. Orr of the Scottsdale City Manager's Office said in a letter to NASA Administrator Daniel S. Goldin dated July 12. "The C-130 based at Ames Research Center was made available with its unique instrumentation capabilities which include infrared sensors capable of fire detection. This use of 'Mission to Planet Earth' resources to help us manage local emergencies for the preservation of life and property is a significant return on taxpayer investment. We appreciate the practical value of this program."

-more-

Instruments aboard the C-130B have the capability to penetrate both smoke and darkness and peer into hidden canyons. In this way, the aircraft can provide visual evidence of the existence and location of dangerous remaining hotspots on its black and white video monitors.

Scottsdale officials requested additional help with flights before dawn July 9. Local mapping experts and other observers aboard the C-130B were able to record changes and significant events within the fire perimeter and transfer that information to command maps for rapid distribution to fire fighting personnel.

"We were able to get crews out there and douse those hot spots," Colin Williams, a spokesperson for the Rural/Metro Fire Department, told a local newspaper. "To find a hot spot in the middle of a 23,000-acre fire would be impossible. But because of the aerial maps, this whole fire will probably be out today (July 9)."

"With pre-dawn flights, we were able to accurately identify the fire perimeter showing overnight changes in fire intensity and spread," Orr said . "This was invaluable information in deploying limited resources to protect threatened life and property. The C-130 crew also identified a two-mile change in the fire front which let the fire team deploy this morning with greater accuracy and safety," he said.

The C-130B has helped local officials handle emergencies before. This crew mapped the Mount St. Helens region after its eruption in 1980. It has assisted with brush fires threatening several California cities, most notably providing thermal and mapping information to ground crews fighting the massive, destructive Oakland Hills fire in late 1991.

- end -

NASA press releases and other information are available automatically by sending an Internet electronic mail message to domo@hq.nasa.gov. In the body of the message (not the subject line) users should type the words "subscribe press-release" (no quotes). The system will reply with a confirmation via E-mail of each subscription. A second automatic message will include additional information on the service. Questions should be directed to (202) 358-4043.

Video Advisory

National Aeronautics and
Space Administration

Washington, DC 20546
(202) 358-1600

For Release

July 24, 1995

David E. Steitz
Headquarters, Washington, DC
(Phone: 202/358-1730)

VIDEO ADVISORY: V95-109

F16-XL SUPERSONIC FLIGHT TESTING PREPARATIONS ON NTV

Tuesday's NASA Television video news file will feature footage of preparations to flight test a concept designed to improve the aerodynamics of aircraft traveling at supersonic speeds. The Supersonic Flow Control experiment will use an F-16XL wing "glove" with a suction panel to remove air from the wing boundary layer and maintain a smoother, low drag laminar flow. Such laminar flow control would enable planes to fly on less fuel and with smaller engines. NASA TV will then replay new Hubble Space Telescope (HST) deep space survey images as well as interviews with Hubble survey team members. Following the Hubble features, animation, hardware footage and an interview on the upcoming Cassini mission will be shown.

NASA Television video news files air at noon, 3, 6, and 9 p.m. EDT.

ITEM #1: SUPERSONIC FLIGHT TESTING **TRT: 3:00**

Preparations for flight testing of a modified F-16XL specially fitted with a wing "glove" to help reduce laminar flow, increasing aircraft fuel and engine efficiency.

ITEM #2:	**REPEAT: HST MEDIUM DEEP SURVEY**	**TRT: :35**
ITEM #3:	**REPEAT: HST DEEP SURVEY**	**TRT: :27**
ITEM #4:	**REPEAT: FAINT BLUE GALAXY**	**TRT: :58**
ITEM #5:	**REPEAT: INTERVIEW WITH RICHARD GRIFFITHS**	**TRT: :27**
ITEM #6:	**REPEAT: CASSINI/HUYGENS PROBE ANIMATION**	**TRT: :37**
ITEM #7:	**REPEAT: EUROPEAN CASSINI HARDWARE ARRIVES**	**TRT: 1:35**
ITEM #8:	**REPEAT: INTERVIEW WITH RICHARD SPEHALSKI**	**TRT: 2:11**

NASA Television is broadcast on Spacenet 2, transponder 5, channel 9, C-Band, located at 69 degrees West longitude, with horizontal polarization. Frequency will be on 3880.0 megahertz, with audio on 6.8 megahertz.

-end-

Launius, Roger

From: NASANews
To: press-release-nasa
Subject: NASA Reports on Aviation, Space Advances at Oshkosh '95
Date: Monday, July 24, 1995 2:12PM

Don Nolan-Proxmire July 24, 1995
Headquarters, Washington, DC
(Phone: 202/358-1983)

Michael Mewhinney
Ames Research Center
(Phone: 415/604-3937)

Keith Henry
Langley Research Center
(Phone: 804/864-6124)

Cam Martin
Dryden Flight Research Center
(Phone: 805/258-3448)

Lori Rachul
Lewis Research Center
(Phone: 216/433-8806)

RELEASE: 95-119

NASA REPORTS ON AVIATION, SPACE ADVANCES AT OSHKOSH '95

"National Leadership/National Partnership" is NASA's theme at this yearUs Experimental Aircraft Association (EAA) Fly-In Convention and Sport Aviation Exhibition July 27 - Aug. 2 at Oshkosh, WI.

Exhibits highlighting the latest innovations in aerospace research will be featured in an updated exhibit hall and technical aerospace forums at AmericaUs largest fly-in convention and air show.

Craftspersons from NASA's research centers will discuss and demonstrate how they make wind tunnel models, instruments and other devices that make NASA's advancements in aeronautical research possible.

Computer experts and novices alike will enjoy an exhibit area devoted to a new on-line Internet World Wide Web hookup devoted to general aviation.

A featured exhibit identifies unique partnerships formed between government, industry and academia to revitalize the general aviation industry in areas ranging from modernizing cockpits to reducing aircraft weight and cost. A concept demonstrator flight simulator will introduce advanced general aviation technology. Highlighted are activities of selected companies developing general aviation technology through the NASA Small Business Innovation Research program.

Another exhibit showcases NASA's role in making air travel safer for thousands of pilots and millions of passengers. The agency's research on weather-related hazards such as wind shear and icing, and on new technology to combat them will be featured.

Visitors will learn how the products of NASA research travel from the lab to the runway in a recap of the payoffs of NASA's aviation research. The way NASA technology is utilized in a variety of products, ranging from new engines and nacelles for the Boeing 777 to small aircraft, automobiles and sailboats, also will be discussed.

Although NASA's Oshkosh exhibit is geared toward aviation, exciting displays of the agency's space programs will include the latest on the Hubble Space Telescope and the international Space Station.

NASA's contribution to the EAA forum program includes a panel of distinguished researchers, government officials and industry representatives who will discuss aviationUs past and future. Other presentations will range from using revolutionary composite components in wind tunnel research to icing protection, advanced cockpit systems for general aviation aircraft and the challenge of flying subsonic aircraft at very high altitudes.

Four NASA aeronautics research centers are supporting the Agency's presence at Oshkosh this year: Ames Research Center, Mountain View, CA, Dryden Flight Research Center, Edwards, CA, Langley Research Center, Hampton, VA, and Lewis Research Center, Cleveland, OH. NASA's Marshall Space Flight Center, Huntsville, AL, is contributing space exhibits and interpreters.

- end -

NOTE TO EDITORS: News media attending Oshkosh '95 are invited to participate in a signing ceremony/media briefing and award presentation Saturday, July 29, at 10 a.m. at the EAA press site.

NASA administrator Daniel Goldin will be present to sign for NASA. The agreement will formally establish a consortium for the revitalization of general aviation in this country. The consortium is made up of NASA, the FAA, U.S. aviation companies and universities. In addition, winners of the first NASA/FAA general aviation university design competition will be announced, and NASA officials will unveil plans for a new general aviation CD-ROM and the establishment of a general aviation site on the Internet World Wide Web.

NATIONAL AERONAUTICS AND SPACE ADMINISTRATION

95-121

SPACE SHUTTLE MISSION

STS-69

PRESS KIT
AUGUST 1995

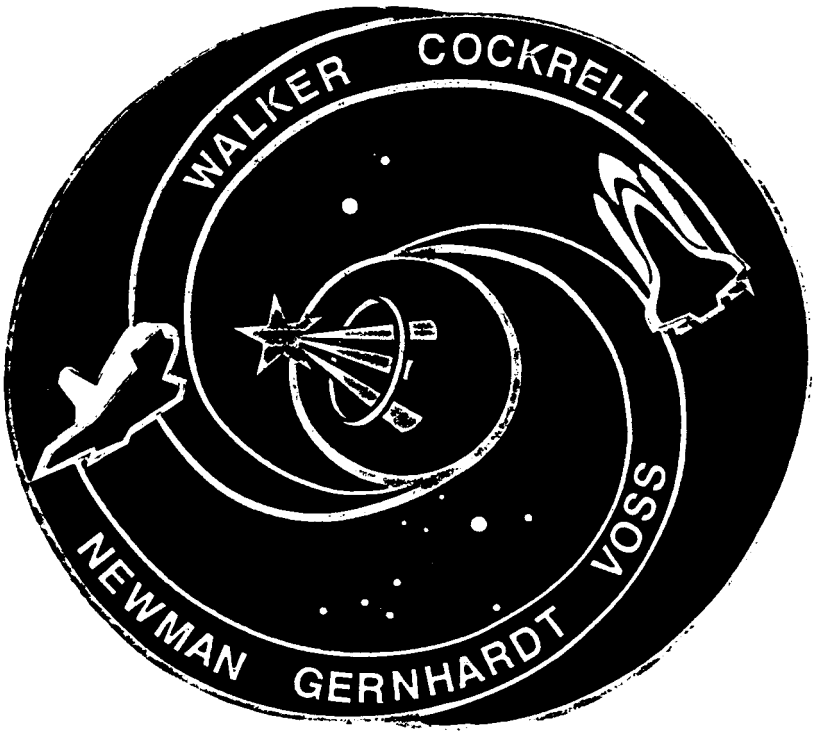

WAKE SHIELD FACILITY-2
SPARTAN-201
CAPL-02/GBA
IEH

PUBLIC AFFAIRS CONTACTS

For Information on the Space Shuttle

Ed Campion Headquarters, Wash., DC	Policy/Management	202/358-1778
Rob Navias Johnson Space Center, Houston, TX	Mission Operations Astronauts	713/483-5111
Bruce Buckingham Kennedy Space Center, FL	Launch Processing KSC Landing Information	407/867-2468
June Malone Marshall Space Flight Center, Huntsville, AL	External Tank/SRBs/SSMEs	205/544-0034
Cam Martin Dryden Flight Research Center, Edwards, CA	DFRC Landing Information	805/258-3448

For Information on STS-69 Experiments & Activities

Jim Cast Headquarters, Wash., DC	WSF-2, CGBA, CMIX, EPICS	202/358-1779
Don Savage Headquarters, Wash., DC	SPARTAN-201	202/358-1547
Doug Isbell Headquarters, Wash., DC	IEH	202/358-1547
Mike Braukus Headquarters, Wash., DC	BRIC, NIH-C4	202/358-1979
Tammy Jones Goddard Space Flight Center, Greenbelt, MD	CAPL/GBA, GAS	301/286-5566

CONTENTS

GENERAL BACKGROUND
General Release....3
Media Services Information....6
Quick-Look Facts....8
DTOs/DSOs....9
Shuttle Abort Modes....10
Summary Timeline....11
Orbital Events Summary....12
Payload and Vehicle Weights....13
Crew Responsibilities....14

CARGO BAY PAYLOADS & ACTIVITIES
Wake Shield Facility-2 (WSF-2)....15
SPARTAN-201....25
Extreme Ultraviolet Hitchhiker (IEH)....32
Capillary Pumped Loop-2/Gas Bridge Assembly (CAPL-2/GBA)....37
Get Away Special (GAS)....39
STS-69 Extravehicular Activities (EVA)....42

IN-CABIN PAYLOADS
Space Tissue Loss/National Institutes of Health-Cells (STL/NIH-C)....43
Commercial Generic Bioprocessing Apparatus-7 (CGBA)....45
Biological Research in Canister (BRIC)....48
Electrolysis Performance Improvement Concept Study (EPICS)....49
Commercial MDA ITA Experiments (CMIX)....51

STS-69 CREW BIOGRAPHIES
David M. Walker, Commander (CDR)....53
Kenneth D. Cockrell, Pilot (PLT)....53
James S. Voss, Payload Commander/Mission Specialist-1 (MS-1)....54
Jim Newman, Mission Specialist-2 (MS-2)....54
Michael L. Gernhardt, Mission Specialist-3 (MS-3)....55

Release: 95-121

Aug 29, 1995

TWO DEPLOY/RETRIEVE PAYLOADS AND A SPACEWALK HIGHLIGHT FIFTH SHUTTLE MISSION OF 1995

The fifth Space Shuttle flight of 1995 will be highlighted by the deployment and retrieval of two scientific spacecraft and a spacewalk to practice for Space Station activities and evaluate space suit design modifications.

Leading the five-person STS-69 crew will be Mission Commander David M. Walker, making his fourth space flight. Pilot for the mission is Kenneth D. Cockrell, making his second flight. The three mission specialists are James S. Voss, serving as Payload Commander and Mission Specialist 1. Voss will be making his third flight. Jim Newman, Mission Specialist 2 is making his second flight and Michael L. Gernhardt, Mission Specialist 3 is making his first flight.

Launch of Endeavour is currently scheduled for August 5, 1995, at 10:45 a.m. EDT. The planned mission duration is 10 days, 20 hours and 29 minutes. An on-time launch on August 5 would produce a landing at 7:14 a.m. EDT on August 16 at the Kennedy Space Center's Shuttle Landing Facility.

The STS-69 mission will mark the second flight of the Wake Shield Facility-2 (WSF-2), a 12-foot diameter, stainless steel disk which will be deployed and retrieved using the Shuttle robot arm. While the WSF flies free of the Shuttle, it will generate an "ultra-vacuum" environment in space within which to grow thin semiconductor films for next-generation advanced electronics. The commercial applications for these new semiconductors include digital cellular telephones, high-speed transistors and processors, fiber optics, opto-electronics and high-definition television.

The Spartan 201 free-flyer will be making its third flight aboard the Shuttle. The Spartan 201 mission is a scientific research effort aimed at the investigation of the interaction between the Sun and its outflowing wind of charged particles. Spartan's goal is to study the outer atmosphere of the Sun and its transition into the solar wind that constantly flows past the Earth.

This flight of Spartan 201 is intended to coincide with the passage of the Ulysses spacecraft over the Sun's north polar region. Ulysses, a cooperative deep space mission of the European Space Agency and NASA, was launched from the Space Shuttle in 1990 with the goal of studying the Sun at high heliographic latitudes.

Last year, Ulysses flew over the south pole of the Sun, becoming the first spacecraft ever to do so. The spacecraft returned a wealth of scientific information about this previously unexplored region. Recently, Ulysses data observed, for the first time, periodic oscillations originating from deep within the Sun's interior.

STS-69 will see the first flight of the International Extreme Ultraviolet Hitchhiker (IEH-1), the first of five planned flights to measure and monitor long-term variations in the magnitude of absolute extreme ultraviolet (EUV) flux coming from the Sun, and to study EUV emissions from the plasma torus system around Jupiter originating from its moon Io.

Also flying aboard Endeavour will be the combined Capillary Pumped Loop-2/Gas Bridge Assembly (CAPL-2/GBA) payload. This experiment consists of the CAPL-2 Hitchhiker payload designed as an in-orbit microgravity demonstration of a cooling system planned for the Earth Observing System Program and the Thermal Energy Storage-2 payload, part of an effort to develop advanced energy generation techniques. Also a part of this payload are several Get Away Special (GAS) experiments which will investigate areas such as the interaction of spacecraft attitude and orbit control systems with spacecraft structures, fluid-filled beams as structural dampers in space and the effects of smoldering combustion in a long-term microgravity environment.

On the tenth flight day, two astronauts will leave Endeavour's crew cabin for about six hours to perform several tasks that will broaden NASA's experience base for building and maintaining the Space Station and for other future spacewalks. The astronauts will perform a number of tasks designed to evaluate and verify specific assembly and maintenance tasks for the Space Station. The spacewalk also will evaluate spacesuit design modifications to protect spacewalkers from the extremely cold space environment.

Another payload being flown with a connection to the development of the Space Station is the Electrolysis Performance Improvement Concept Study (EPICS). Supply of oxygen and hydrogen by electrolyzing water in space will play an important role in meeting NASA's needs and goals for future space missions. On-board generation of oxygen is expected to reduce the annual resupply requirement for the Space Station by approximately 12,000 pounds. The oxygen generation assembly which was initially baselined for the Space Station Freedom Program is the Static Feed Electrolyzer (SFE). The EPICS hardware being flown on STS-69 will demonstrate and validate the SFE electrochemical process in microgravity, as well as investigate performance improvements thought possible in a microgravity environment.

There are various payloads which have made several flights aboard the Space Shuttle which will be flying once again. The payloads are the National Institutes of Health-Cells-4 (NIH-C4) experiment that will continue examining bone loss during space flight; the Biological Research in Canister-6 (BRIC-6) that will continue the study of the processing of outside signals by mammalian cells and the gravity-sensing mechanism within mammalian cells, which scientists are still trying to identify.

Two other frequent flyers on the Shuttle are the commercial experiments (CMIX-4) whose objectives will include analysis of cell change in microgravity along with studies of neuro-muscular development disorders. Also flying is the Commercial Generic Bioprocessing Apparatus-7 (CGBA-7). CGBA is a secondary payload that serves as an incubator and data collection point for experiments in pharmaceuticals testing and biomedicine, bioprocessing and biotechnology, agriculture and the environment.

STS-69 will be the 9th flight of Space Shuttle Endeavour and the 71st flight of the Space Shuttle System.

- end -

MEDIA SERVICES INFORMATION

NASA Television Transmission

NASA Television is available through Spacenet-2 satellite system, transponder 5, channel 9, at 69 degrees West longitude, frequency 3880.0 MHz, audio 6.8 Megahertz.

The schedule for television transmissions from the Orbiter and for mission briefings will be available during the mission at Kennedy Space Center, FL; Marshall Space Flight Center, Huntsville, AL; Dryden Flight Research Center, Edwards, CA; Johnson Space Center, Houston; NASA Headquarters, Washington, DC. The television schedule will be updated to reflect changes dictated by mission operations.

Television schedules also may be obtained by calling COMSTOR 713/483-5817. COMSTOR is a computer data base service requiring the use of a telephone modem. A voice update of the television schedule is updated daily at noon Eastern time.

Status Reports

Status reports on countdown and mission progress, on-orbit activities and landing operations will be produced by the appropriate NASA newscenter.

Briefings

A mission press briefing schedule will be issued prior to launch. During the mission, status briefings by a Flight Director or Mission Operations representative and when appropriate, representatives from the payload team, will occur at least once per day. The updated NASA television schedule will indicate when mission briefings are planned.

Access by Internet

NASA press releases can be obtained automatically by sending an Internet electronic mail message to domo@hq.nasa.gov. In the body of the message (not the subject line) users should type the words "subscribe press-release" (no quotes). The system will reply with a confirmation via E-mail of each subscription. A second automatic message will include additional information on the service.

Informational materials also will be available from a data repository known as an anonymous FTP (File Transfer Protocol) server at ftp.pao.hq.nasa.gov under the directory /pub/pao. Users should log on with the user name "anonymous" (no quotes), then enter their E-mail address as the password. Within the /pub/pao directory there will be a "readme.txt" file explaining the directory structure.

The NASA public affairs homepage also is available via the Internet. The page contains images, sound and text (press releases, press kits, fact sheets) to explain NASA activities. It also has links to many other NASA pages. The URL is: **http://www.nasa.gov/hqpao/hqpao_home.html**

Pre-launch status reports from KSC are found under **ftp.hq.nasa.gov/pub/pao/statrpt/ksc**, and mission status reports can be found under **ftp.hq.nasa.gov/pub/pao/statrpt/jsc**. Daily TV schedules can be found under **ftp.hq.nasa.gov/pub/pao/statrpt/jsc/tvsked**.

Access by fax

An additional service known as fax-on-demand will enable users to access NASA informational materials from their fax machines. Users calling (202) 358-3976 may follow a series of prompts and will automatically be faxed the most recent Headquarters news releases they request.

Access by Compuserve

Users with Compuserve accounts can access NASA press releases by typing "GO NASA" (no quotes) and making a selection from the categories offered.

STS-69 QUICK LOOK

Launch Date/Site:	August 5, 1995/KSC Launch Pad 39B
Launch Time:	10:45 a.m. EDT
Launch Window:	2 hours, 30 minutes
Orbiter:	Endeavour (OV-105) - 9th flight
Orbit/Inclination:	200 nautical miles/28.45 degrees
Mission Duration:	10 days, 20 hours, 29 minutes
Landing Date:	August 16, 1995
Landing Time:	7:14 a.m. EDT
Primary Landing Site:	Kennedy Space Center, FL
Abort Landing Sites:	Return to Launch Site - KSC Transoceanic Abort Landing - Banjul, The Gambia Ben Guerir, Morocco, Moron, Spain Abort Once Around - Edwards AFB, CA
Crew:	Dave Walker, Commander Ken Cockrell, Pilot Jim Voss, Payload Commander, Mission Specialist 1 Jim Newman, Mission Specialist 2 Mike Gernhardt, Mission Specialist 3
EVA Crewmembers:	Voss (EV 1), Gernhardt (EV 2)
Cargo Bay Payloads:	Wake Shield Facility SPARTAN-201 IEH-01 CAPL/GBA
Middeck Payloads:	BRIC CGBA CMIX EPICS STL/NIH-C

Developmental Test Objectives/Detailed Supplementary Objectives

DTO 301D:	Ascent Structural Capability Evaluation
DTO 305D:	Ascent Compartment Venting Evaluation
DTO 306D:	Descent Compartment Venting Evaluation
DTO 307D:	Entry Structural Capability
DTO 312:	ET TPS Performance
DTO 414:	APU Shutdown Test
DTO 415:	Water Spray Boiler Electrical Heater Capability
DTO 653:	Evaluation of the MK-1 Rowing Machine
DTO 656:	PGSC Single Event Upset Monitoring
DTO 667:	Portable In-Flight Landing Operations Trainer (PILOT)
DTO 671:	EVA Hardware for Future EVA Missions
DTO 672:	EMU Electronic Cuff Checklist
DTO 679:	KU-Band Communications Adapter Demonstration
DTO 700-8:	GPS Developmental Flight Test
DTO 700-10:	Orbiter Space Vision System Flight Video Taping
DTO 805:	Crosswind Landing Performance
DTO 831:	Manipulator Position Display as an Aid to RMS Operators
DTO 833:	EMU Thermal Comfort Evaluations
DTO 914:	Space Linear Acceleration Mass Measurement Device Evaluation
DTO 1210:	EVA Operations Procedure/Trainer
DSO 482:	Cardiac Rhythm Disturbances During EVA
DSO 483:	Back Pain Pattern in Microgravity
DSO 485:	Inter Mars TEPC
DSO 489:	EVA Dosimetry Evaluation
DSO 491:	Characterization of Microbial Transfer During Space Flight
DSO 492B:	In-Flight Evaluation of a Portable Clinical Blood Analyzer
DSO 494:	Influence of Microgravity and EVA on Pulmonary Oxygen Exchange
DSO 604:	Visual Vestibular Integration as a Function of Adaptation
DSO 605:	Postural Equilibrium Control During Landing/Egress
DSO 608:	Effects of Space Flight on Aerobic and Anaerobic Metabolism in Exercise
DSO 610:	In-Flight Assessment of Renal Stone Risk
DSO 624:	Pre and Postflight Measurement of Cardiorespiratory Responses to Submaximal Exercise
DSO 901:	Documentary Television
DSO 902:	Documentary Motion Picture Photography
DSO 903:	Documentary Still Photography

Space Shuttle Abort Modes

Space Shuttle launch abort philosophy aims toward safe and intact recovery of the flight crew, Orbiter and its payload. Abort modes for STS-69 include:

Abort-To-Orbit (ATO) -- Partial loss of main engine thrust late enough to permit reaching a minimal 105-nautical mile orbit with the orbital maneuvering system engines.

Abort-Once-Around (AOA) -- Earlier main engine shutdown with the capability to allow one orbit of the Earth before landing at the Edwards AFB, CA.

TransAtlantic Abort Landing (TAL) -- Loss of one or more main engines midway through powered flight would force a landing at either Banjul, The Gambia; Ben Guerir, Morocco; or Moron, Spain.

Return-To-Launch-Site (RTLS) -- Early shutdown of one or more engines, and without enough energy to reach a TAL site, would result in a pitch around and thrust back toward the Kennedy Space Center until within gliding distance of the Shuttle Landing Facility.

MISSION SUMMARY TIMELINE

Flight Day One:
Launch/Ascent
OMS-2 Burn
IEH Activation
WSF Activation
RMS Checkout

Flight Day Two:
IEH Operations
CMIX Operations
SPARTAN-201 Deploy

Flight Day Three:
IEH Operations
Rendezvous Burns
Exercise DTOs and DSOs

Flight Day Four:
SPARTAN-201 Retrieval
WSF Communications Checkout

Flight Day Five:
WSF Ram Cleaning and ADACS Checkout
WSF Deploy
WSF Science Monitoring

Flight Day Six:
WSF Science Monitoring
Secondary Experiment Operations
Rendezvous Burns

Flight Day Seven:
WSF Plume Tests
WSF Retrieval

Flight Day Eight:
WSF CHAWS Operations
WSF Berthing
IEH Operations
Cabin Depress
Electronic Cuff Checklist Checkout

Flight Day Nine:
Off Duty Time
GLO Operations
EMU Checkout
Crew News Conference

Flight Day Ten
EVA Prep
EVA (6 hours)

Flight Day Eleven
Flight Control System Checkout
Reaction Control System Hot Fire
GLO Operations
Cabin Stow

Flight Day Twelve
Deorbit Prep
Deorbit Burn
Entry
KSC Landing

STS-69 ORBITAL EVENTS SUMMARY

EVENT	Mission Elapsed Time	Eastern Time/Date
Launch	0/00:00	10:45 AM, August 5
OMS-2	0/00:43	11:28 AM, August 5
SPARTAN Release	1/00:33	11:18 AM, August 6
SPARTAN Grapple	2/23:13	9:58 AM, August 8
OMS-3	3/02:59	1:44 PM, August 8
OMS-4	3/03:43	2:28 PM, August 8
WSF Release	3/18:33	5:16 AM, August 9
WSF Grapple	6/00:07	10:50 AM, August 11
OMS-5	7/00:08	10:53 AM, August 12
OMS-6	7/00:52	11:37 AM, August 12
EVA Begins	8/17:03	3:48 AM, August 14
EVA Ends	8/23:13	9:58 AM, August 14
Deorbit Burn	10/19:29	6:14 AM, August 16
Landing	10/20:29	7:14 AM, August 16

PAYLOAD AND VEHICLE WEIGHTS

Vehicle/ Payload	Pounds
Orbiter (Endeavour), empty and 3 SSMEs	174,249
Wake Shield Facility (WSF)	4,364
WSF Support Equipment	3,882
Spartan-201	2,842
Spartan-201 Support Equipment	2,405
BRIC	54
CGBA	121
CMIX	70
EPICS	102
STL	69
DTOs/DSOs	694
Shuttle System at SRB Ignition	4,519,985
Orbiter Weight at Landing	219,718

STS-69 CREW RESPONSIBILITIES

Task	Prime	Backup
Wake Shield Systems	Gernhardt	Voss
Wake Shield Science	Newman	Voss
WSF Deploy and Retrieve	Newman	Voss
SPARTAN Systems	Gernhardt	Voss
SPARTAN Deploy/Retrieve	Gernhardt	Newman
Rendezvous	Walker	Cockrell/Newman
IEH	Cockrell	Voss/Walker
BRIC	Gernhardt	Voss
CAPL/GBA	Newman	Voss
CGBA	Voss	Walker
CMIX	Gernhardt	Voss
EVA	Voss	Gernhardt
EVA Coordinator	Cockrell	
EVA RMS	Newman	
EPICS	Gernhardt	Newman
STL/NIH-C	Cockrell	Voss
Earth Observations	Cockrell	Newman

WAKE SHIELD FACILITY-2 (WSF-2)

The Wake Shield Facility (WSF) is a 12-foot diameter, stainless steel disk designed to generate an "ultra-vacuum" environment in space within which to grow thin films for next generation advanced electronics. This mission -- the second in a planned series of four -- represents the utilization of a unique attribute of space, the "ultra-vacuum." The STS-69 crew will deploy and retrieve WSF-2 during the mission. NASA's Office of Space Access and Technology, Wash. DC, is the sponsor of the WSF-2.

The principle objectives of the WSF-2 mission include: performance of WSF as a free-flyer far enough away from the Orbiter to achieve and characterize for the first time an uncontaminated "ultra-vacuum" in low-Earth orbit; and, demonstrate the feasibility of epitaxial growth of high quality compound semiconductor thin films and heterostructures required for future advanced electronic and optoelectronic devices as part of the four-flight WSF proof-of-concept program.

The first flight of the WSF-1 occurred aboard Discovery on STS-60 in February of 1994. Because of difficulties in attitude control, experiments were performed only while WSF-1 was attached to the Shuttle's robot arm. Although the results of WSF-1 did demonstrate wake formation and thin film growth, water vapor contamination from the Shuttle interfered with the achievement of "ultra vacuum" necessary for achieving the growth of semi-conductor materials superior to those that can be grown on Earth. Following this first flight, a WSF advisory committee reviewed flight anomalies and approved corrective actions. Subsequently, a NASA independent review board evaluated all systems and unanimously agreed that WSF-2 was ready for flight.

Results from the four planned WSF flights may have a significant impact on the microelectronics industry because the use of advanced semiconducting thin film materials in electronic components holds a very promising economic advantage. The commercial applications for high quality semiconductor devices are most critical in the areas of cellular telephones, high-speed transistors and processors, high-definition television, fiber optic communications and opto-electronics. The majority of electronic components used today are made of the semiconductor silicon, but there are many other materials that could achieve higher predicted performance than silicon. Atomic quality, sample size, and sample processing all suffer for compound semiconductors, and improving these parameters would result in high quality semiconductor materials which could lead to a new generation of electronic components.

Epitaxy, the growth of atomically ordered thin films in a vacuum environment, is one method of generating such advanced materials. A prime barrier to improving epitaxial films is the limit on the quality of the vacuum which can be generated in an industrial growth chamber. To improve the material, the vacuum in which it is grown must be improved. The vacuum of space can make this improvement possible.

Low-Earth Orbit (LEO) space can be used to grow compound semiconductor materials such as gallium arsenide, by creating a vacuum "wake" behind an object moving in orbit. The moderate natural vacuum in LEO has enough atoms present to contaminate a growing film. A vehicle in orbit, such as the WSF, can push those atoms out of the way, leaving few, if any, behind in its wake, thus the name. The unique ultra-vacuum produced in space by the WSF will be 1,000 to 10,000 times better than the best laboratory vacuum chambers on Earth. Using this ultra-vacuum in space, the WSF holds the promise of producing the next generation of semiconductor materials and the devices they will make possible.

The WSF was designed, built, and managed by the Space Vacuum Epitaxy Center (SVEC)--a NASA Center for the Commercial Development of Space based at the University of Houston, -- with its principle industry partner, Space Industries, Inc. (SII), League City. Twelve additional corporate partners support the WSF program, including: Advanced Modular Power Systems, Ann Arbor, MI; American Xtal Technology, Dublin, CA; AKZO Chemicals, Inc., Houston, TX; Honeywell Satellite Systems, Phoenix, AZ; Ionwerks, Houston, TX; International Stellar Technology, Inc., Houston, TX; Instruments, S.A., Inc., Edison, NJ; Lockheed Martin, Syracuse, NY; MKS Instruments, Andover, MA; and S.I. Diamond, Inc., Houston, TX. In addition, Baylor University, Case Western Reserve University, Lamar University, the University of Texas at Dallas, the University of Texas at Austin; the University of Toronto; NASA's Johnson Space Center, NASA's Marshall Space Flight Center, NASA's Lewis Research Center, and the U.S. Air Force Phillips Laboratories are members of the SVEC consortium.

Program Overview

The space ultra-vacuum concept was first identified by NASA more than 20 years ago, but there was no need identified at that time for its use. The recent interest of scientists and corporate researchers in epitaxial thin film growth has motivated the use of space to create the ultra-vacuum in which to grow better thin films.

Recognizing this scientific opportunity as a new economic opportunity in 1987, SVEC formed a consortium of interested industries, academic institutions and government laboratories to utilize LEO for thin film growth. In 1989, SVEC partnered with its industry members, led by SII, Inc., and with NASA's Johnson Space Center to build the WSF using an innovative commercial approach.

The SVEC commercial approach to space hardware development foregoes extensive paperwork, uses commercial off-the-shelf hardware where possible, and maintains design simplicity, while not compromising safety. It does, however, prudently accept some risk in mission success through not designing for the traditional 100% reliability goal of most aerospace programs. This unique approach has allowed the WSF to be produced at less than one sixth or $30 million -- the cost of a traditional aerospace hardware development program -- in a 10-year period.

Hardware Description

The WSF hardware consists of the Shuttle Cross Bay Carrier mounting equipment and the Free Flyer. The Carrier remains in the Shuttle and has a latch system which holds the Free Flyer to it. The Shuttle's robot arm will be used to remove the Free Flyer from the Carrier and deploy it into space. The WSF will follow behind the Shuttle at a station-keeping distance of 30 nautical miles.

The Free Flyer is a fully-equipped spacecraft on its own, with cold gas propulsion for separation from the Shuttle and a momentum bias attitude control system. Sixty kilowatt-hours of energy, stored in silver-zinc batteries, power the thin-film growth furnaces, substrate heaters, process controllers, and a sophisticated array of vacuum characterization devices, including mass spectrometers and total pressure gauges. Weighing approximately 8,100 pounds altogether, (the Free Flyer itself is 4,350 pounds), the WSF occupies one quarter of the Shuttle payload bay. Process control equipment and vacuum characterization equipment are located on the back (wake side) of the free flyer, while the controller electronics, attitude control system, batteries and support equipment are located on the front (ram side). The WSF radio frequency communications system routes telemetry and commands, including video, from the Cross Bay Carrier, through the Shuttle systems to both WSF ground personnel and the flight crew.

The WSF as a Versatile Space Platform

As a free-flying platform, the WSF's wake side -- the "ultra-clean side" -- is used on this mission primarily for ultra-pure thin-film growth. The ram side -- the "dirty side" -- houses the avionics platform and also is used to accommodate other experiments and space technology applications. The ram side has more than 65 square feet of usable surface in the form of the outer shield, which will support other space payloads.

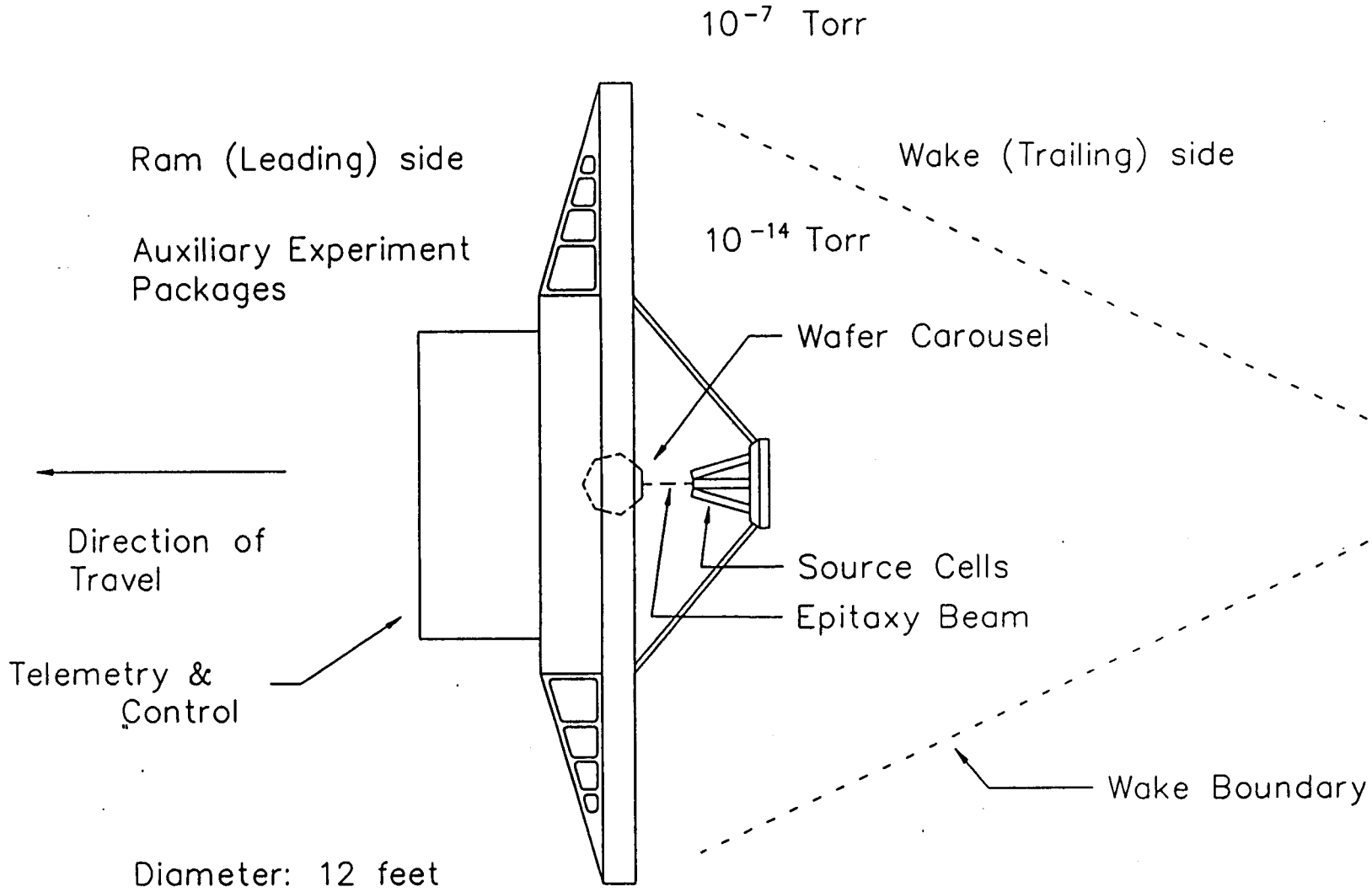

Wake Shield Facility

Since the WSF is mounted horizontally in the Shuttle payload bay, the open volume below the WSF is effectively used by mounting additional payload canisters on the Cross Bay Carrier. The Carrier's power and data capabilities are extended to the payload canisters, prompting the name "Smart Cans." Based on NASA's Goddard Space Flight Center's Get Away Special Canisters (GAS Cans), the Smart Cans also provide the opportunity for other payloads to fly with the WSF (however, they stay inside the Orbiter payload bay during the entire mission.) Candidates for these supplemental payload opportunities have been actively pursued by SVEC, resulting in nine additional experiments being undertaken on WSF-2 in a cooperative manner.

What is Epitaxial Thin Film Growth?

Epitaxial thin film growth is an approach to generating atomically ordered thin films of semiconductor oxides and metals with a reduced number of defects through the growth of material on a crystalline substrate in a vacuum. In epitaxy, a prepared surface, or substrate, is exposed in a vacuum to atomic or molecular beams of elements such as aluminum (Al), arsenic (As), gallium (Ga), or indium (In). The substrate acts as an atomic pattern, or template, upon which the atoms form crystalline thin films. The atoms grow in layers which follow the atomic structure pattern of the substrate. A thin film of new materials then grows on top of the substrate in an atom-by-atom, atomic-layer-by-atomic-layer manner to form a "wafer" with an ultra-high purity. This growth technique is defined as Molecular Beam Epitaxy, and has been used as a laboratory technique for studies in new thin film electronic materials for the past 20 years. It has been shown during this time that the vacuum environment within which the materials are grown is critical to the quality of the thin film.

WSF-2 can grow epitaxial thin films on seven different substrate wafers with material from seven different source furnaces, or cells. The principle objectives of thin film experiments are the growth of high purity films and high electron mobility structure in aluminum, gallium, arsenide type systems.

Cooperative Payloads: Free-Flyer Experiments

The **Global Positioning System** (GPS) is a dual mode experiment from the University of Texas at Austin using a GPS receiver to determine precision position and velocity of the WSF and employing GPS signal strength attenuation to determine atmospheric temperature profiles. Partially funded by a NASA Johnson Space Center regional university grant, the GPS experiment will operate during the free flight portion of the WSF mission recording position, velocity, signal strength and diagnostic information. The system will be activated by ground command from the JSC Payload Operations Control Center (POCC). Data will be collected onboard, stored in an unique solid state recording device developed for this mission by JSC, and analyzed post flight.

NASA engineers and scientists working jointly with SVEC will undertake the ambitious **Shuttle Plume Impingement Experiment** in support of Space Station development. The complex interaction between Shuttle jet firings and space structures is a critical concern to Space Station planners. The WSF Free Flyer, loaded with environmental diagnostic equipment, is the ideal target for this study -- a cost-effective means to multiply benefits to differing program goals. A complex and extensive series of Shuttle thruster firings at a variety of distances from the WSF have been developed to use the WSF's response as measure of the characteristics of the Shuttle's thruster plumes.

The Neutral Mass Spectrometer (NMS) was developed in a team effort by the University of Texas at Dallas and Lamar University, Beaumont, TX. This experiment will test a magnetic-sector field mass spectrometer designed to measure the ultra-vacuum created in the wake of the WSF. Located on the WSF outer shield, the NMS will be ground commanded for operations during the free flight portion of the WSF mission.

The **Cosmic Dust and Orbital Debris Experiment Monitor** (CoDEM) is an experiment from the Baylor University Space Science Laboratory. This experiment will collect and characterize the near WSF environment with in-situ measurements of dynamic and physical characteristics of particulate matter. The ensemble of detectors will measure particle time-of-flight, impact plate plasma, and particle impact momentum. This experiment incorporates high sensitivity, high reliability integrated detectors into a package capable of returning captured materials for laboratory examination.

This state-of-the-art detector will employ thin-film plasma, impact plate plasma, and particle impact momentum devices to measure hypervelocity impacts of cosmic dust or orbital debris. These measurements will permit determination of mass, density, and velocity. The experiment will attempt to capture dust grains using micropore foams and a substance called aerogel. CoDEM is a self-contained experiment which requires no interaction from the ground during on-orbit operations.

The **Earth Reference Attitude Determination System** (ERADS), from Honeywell Satellite Systems, uses a combination of Earth and Sun sensors in combination on the rim of the WSF. The sensor has an annular field of view which permits Earth limb and star field viewing. ERADS is activated and controlled from the ground, collecting data in an on-board data recorder. Data will be processed post flight. Real time interaction is limited to state of health and system activation/deactivation.

The University of Toronto Institute for Aerospace Studies has developed a **Materials Exposure Experiment** for collecting data on atomic oxygen interaction with various materials. This is a passive exposure experiment mounted on top of the WSF batteries facing into the velocity vector (ram direction). The experiment will expose over 150 samples of 26 different materials to the space environment. The objective is to gather data on how this affects these materials.

The **Hyper Velocity Impact Capture Experiment**, developed by NASA's Jet Propulsion Laboratory, is a passive debris collection/exposure experiment which has flown on previous Shuttle missions. The experiment has three collectors -- two on the WSF free flyer, and one remaining on the Cross Bay Carrier in the Shuttle payload bay. The objective is to measure space debris around the WSF and compare it to data collected on previous space flights. The two exposure plates on the free flyer are mounted on the outer shield, the large collector facing into the velocity vector and the smaller facing the opposite direction.

The Cross Bay Carrier collector is mounted on the port side of the carrier facing out of the Shuttle bay. The objective is to gather information about the flow of debris around the WSF. The capture medium will be aerogel.

Charging Hazards and Wake Studies (CHAWS), an experiment from the Air Force Phillips Laboratory located at Hanscom AFB, MA, expands the understanding of the interactions of the space environment with space systems and the hazards these interactions create for satellite systems. Goals are to: measure the ambient low energy positively charged particles, and study the magnitude and directionality of the current collected by a negatively charged object in the plasma wake. The experiment consists of two sensors and control electronics. The Langmuir probe is located on the wake side of the WSF, and the other sensor is located on the ram side at the nadir position near the edge of the outer shield.

The CHAWS experiment will collect its primary data while the WSF is attached to the Shuttle robot arm. Shuttle attitude and the robot arm position will be varied to expose the sensors and allow the "mapping" of plasma wake around the Shuttle. Real-time data and command is used to control the CHAWS during the operations. The payload will be controlled by Air Force personnel from the JSC POCC. CHAWS operations will be conducted during a six-hour period at the conclusion of the WSF free flight mission. This experiment is a re-flight of the experiment flown during WSF-1 on STS-60.

Cooperative Payloads: Cross Bay Carrier Experiments

The **Iowa Joint Experiment on Microgravity Solidification**, constructed by the Iowa Space Grant Consortium, is carried in a WSF SMART Can located on the Cross Bay Carrier. The overall objective of the experiment is to examine the effects of a microgravity environment on the solidification process of a tin-cadmium alloy imbedded with particulate matter. The experiment consists of six test cells, heaters and a control processor located in the "Can". The on-board computer is a 486 processor with 3 megabytes of flash memory. The cells, 1 inch diameter by 4 inches long stainless steel tubes, will be heated to melt the samples, held at this temperature, and then passively cooled. The temperature of the cells will be monitored and recorded by the on-board computer processor. Samples will be analyzed post-flight.

During the WSF-2 mission, the experiment will be activated by the crew using the Shuttle standard switch panel. All experiment events are pre-programmed and the experiment will be autonomous.

The **Advanced Process Controller** (APC) is a joint Space Industries and Space Vacuum Epitaxy Center venture for development and space qualification of a PC type process controller. Future uses of the controller include the automated control of the commercial WSF. The process controller will be located in a "Can" and will be used to monitor temperatures, current and voltage as well as providing relay control functions. The APC will be activated by the flight crew using the standard switch panel. Ground commanding will originate from the POCC at JSC.

An engineering team at JSC has developed **Long Range AutoTRAC**, a video system for testing light-enhanced photogrammetric ranging techniques on-orbit. The video camera/light emitting diode (LED) combination instrument is located on the Wake Shield Cross Bay Carrier. The LEDs will illuminate four retro reflectors located on the ram side of the WSF, and the camera will view the returned light. Video images will be stored for post-flight analysis to determine range, bearing and attitude of the WSF.

Other Experiments Supported by WSF

The **MagField Experiment** undertaken by tenth grade students at Gregory Jarvis High School in Mohawk, New York, will determine the variation of the Earth's magnetic field from magnetometer and electron diffraction data obtained during the Wake Shield mission. An electron beam, used for in-situ diffraction measurement of the atomic structure of growing semiconductor thin films, is deflected by the Earth's magnetic field. The amount and direction of the deflection can be used to determine the magnitude and direction of the Earth's magnetic field as a function of the WSF's orbital position.

Data collected during the WSF mission will be given to the school for post-flight analysis. The high school students will work with Space Vacuum Epitaxy Center researchers in applying the WSF magnetic field data to the identification of variations of the Earth's magnetic field from that of an ideal magnetic dipole field.

Mission Scenario

On Flight Day 4, the WSF will be grappled by the Shuttle arm and removed from the Cross-Bay Carrier. The WSF will be positioned by the arm to be scoured by the highly reactive atomic oxygen found in LEO, and by the Sun's heat. The cleaning will last from one-and-a-half to three hours. Some systems tests will be run during this cleaning cycle, such as communications checks between the Carrier and the Free Flyer, checks of the Free Flyer batteries, and activation of the primary video camera on the wake side of the Free Flyer.

After the cleaning is done, the arm will move the WSF to the release position near the center of the payload bay. The Free Flyer will separate from the arm and move under its own nitrogen gas thrusters to about 30 nautical miles behind the Shuttle to isolate it from Shuttle contamination sources (such as water dumps, fuel cell purges and engine firings).

The WSF will stay 30 nautical miles behind the Shuttle while growing the thin films. During this time, it will be operated from the POCC at JSC. The SVEC team will monitor and control all aspects of WSF operations in close cooperation with the astronaut crew. Cooperative payloads will be operated from the Commercial Payload Command Center located at Space Industries a few miles from JSC in League City, TX. On Flight Day 6, the Shuttle will rendezvous with the Free Flyer. Every member of the STS-69 crew has a vital role to play during the WSF rendezvous and capture, and the integral plume experiment. During approach, David Walker and Kenneth Cockrell will fly Endeavor in a complex series of maneuvers designed to expose the WSF to carefully controlled thruster exhaust plumes. James Newman and Michael Gernhardt will coordinate the plume experiment initiation and data acquisition, and James Voss will track the WSF position by video. After the astronauts recapture the WSF, it will stay on the Shuttle arm above the payload bay during the astronaut sleep period for extended WSF environmental measurements.

On Flight Day 7, the CHAWS experiment will be performed. The astronauts will position the WSF to the point above the overhead windows and maneuver it to gather plasma flow data around the WSF. The Auroral Photography Experiment B camera will be used in support of the plasma flow studies to view the Shuttle glow phenomenon on the CHAWS plasma probe from the Shuttle's aft flight deck windows. Plasma flow data will be acquired for two full orbits after which the WSF will be re-stowed for return to Earth.

Future Plans for the WSF Program

The WSF program consists of four flights at roughly one year intervals. During these four flights, the WSF program will characterize the uncharted neutral and plasma wake formed by a vehicle in LEO; grow thin films in the unique wake ultra-vacuum; and demonstrate the ability to grow commercial quantities of epitaxial thin films in space, establishing the "proof-of-concept" required for industry to fully embrace the space epitaxial growth technology. To accomplish these goals, the WSF program is designed to evolve, with the WSF-3 flight in 1996, increased capability in number and types of thin film grown, and in command and control of the growth process through ground operations from a commercial payload control center. WSF-3 also will see the addition of solar panels, additional on-board computing capabilities, and robotic substrate sample manipulation for extended orbital operations. WSF-4 in 1998 is expected to have the capability of processing up to 300 epitaxial thin film wafers.

Beyond the first "proof-of-concept" flights, full commercial use of the WSF is projected. This "Mark II" phase envisions -- a WSF Free Flyer orbiting for a five-year manufacturing cycle. The 4,350-pound weight of the Free Flyer makes it economically unfeasible to launch and retrieve for every batch of wafers grown. Since each 300 wafer batch only weighs about ten pounds, it is clearly more suitable to launch only the raw materials and bring back only the finished wafers. Therefore, the WSF Mark II would be launched into orbit and then periodically serviced from the Space Station.

Conclusion

Accomplishing the objectives of the four flight test program is expected to prove the theory that electronic materials grown in space can be of higher quality than those grown on Earth, can be processed in space, and can be produced in large areas. The electronics industry's need for high-speed optical and high-frequency electronic devices will continue to drive advanced materials development and improvement. The ever-increasing use of electronic materials worldwide and the ability to grow them in thin film form in space is expected to give commercial viability to the use of the space ultra-vacuum to produce advanced electronic materials.

NASA SPECIAL PAYLOADS DIVISION ON STS-69

STS-69 marks a major milestone for payloads from the Goddard Space Flight Center. All three of the payloads are part of NASA's effort to produce faster, better, and cheaper access to space and all three of the payloads come from the Special Payloads Division (SPD) at Goddard. Not only are both of the Shuttle projects under SPD represented, but all of the Shuttle programs administrated by the SPD have at least one experiment flying on STS-69.

The Spartan Project is flying the third Spartan 201 (SP201-03) mission in a series of four, which is a primary payload. The White Light Coronograph (WLC) instrument on SP201 is a Goddard Laboratory for Astronomy and Solar Physics Division instrument. The other two bridges, International Extreme Ultraviolet Hitchhiker (IEH-1) and Capillary Pumped Loop-2 (CAPL-2)/Get Away Special Bridge Assembly (GBA-6) are from the Shuttle Small Payloads Project (SSPP). IEH-1 has three Hitchhiker Program experiments and a Hitchhiker-Jr Program experiment. CAPL-2/GBA(6) has one Hitchhiker experiment, one Complex Autonomous Payload using the Get Away Special (GAS) carrier, and four GAS payloads.

SPARTAN 201-03

The Spartan 201-03 mission is a scientific research effort aimed at the investigation of the interaction between the Sun and its outflowing wind of charged particles. Spartan's goal is to study the outer atmosphere of the Sun and its transition into the solar wind that constantly flows past the Earth. The mission involves the deployment and operation of the free-flying Spartan spacecraft from Space Shuttle Endeavour.

This mission -- the third for Spartan -- is intended to coincide with the passage of the Ulysses spacecraft over the Sun's north polar region. As the Ulysses spacecraft passes high over the north pole of the Sun, its instruments are sampling the physical properties of electrons, protons, and ions in the solar wind flowing past the spacecraft. These properties include variations of temperature, density, ionic composition, and magnetic and velocity fields. At the same time, intensive collaborative observations of the source of the solar wind at the Sun are planned, including Spartan 201-03 and a variety of other ground and space-based experiments.

SPARTAN 201-03 Science and Instruments

Science Objectives

The primary objective of the Spartan 201-03 mission is to understand the physical circumstances of the corona at the Sun during the time of the Ulysses north polar passage. It had been suspected for about 20 years that the polar regions of the Sun were sources for high speed solar wind streams. This

hypothesis was finally confirmed by measurements made by the Ulysses spacecraft during the south polar passage in September 1994.

The Spartan solar viewing instruments will be used to define conditions at the base of the heliosphere where the solar wind has its origins. The great mysteries yet to be solved are what process accelerates the solar wind and, still more basic, why the corona is so much hotter than the underlying layers of the Sun.

Instruments

The two scientific instruments on Spartan 201-03 are the Ultraviolet Coronal Spectrometer (UVCS) and the White Light Coronagraph (WLC).

The UVCS is used to measure characteristics of the light emitted by neutral hydrogen atoms in the solar corona. It also measures the brightness of light emitted by hot, highly-charged atomic ions. These measurements are used to determine line-of-sight velocities, kinetic temperatures, densities, and bulk outflow velocities for some of the major constituents in the corona and solar wind. This device was developed by the Smithsonian Astrophysical Observatory, Cambridge, MA.

The WLC is a specialized telescope which produces an artificial eclipse of the Sun so that the constantly-changing shape and form of the solar corona can be imaged. The experiment is operated by the Goddard Space Flight Center and was developed by the High Altitude Observatory, Boulder, CO.

The UVCS will return spectroscopic data for ionized hydrogen and five-times ionized oxygen located in coronal regions from 1.35 to 4 solar radii. The light used by UVCS is in the extreme ultraviolet region of the spectrum. Radiation from these ions is unobservable from the surface of the Earth because of atmospheric absorption.

The WLC instrument images the white light (electron-scattered) component of the corona to provide information on the detailed coronal structure. Space-borne instruments of this type are free from the glare caused by light-scattering within the Earth's atmosphere. They allow the corona to be imaged at distances high above the Sun's surface. Together, these two instruments will be used to investigate properties of the solar corona at the base of the solar wind. These include:

* The distribution of temperature and density distributions for both electrons (WLC) and protons and heavy ions (UVCS).

* Detection of bulk flows in the lower corona and inference of systematic velocity fields in the corona.

* Detection of heating of the lower corona by the deposition of energy carried by hydromagnetic waves (WLC and UVCS).

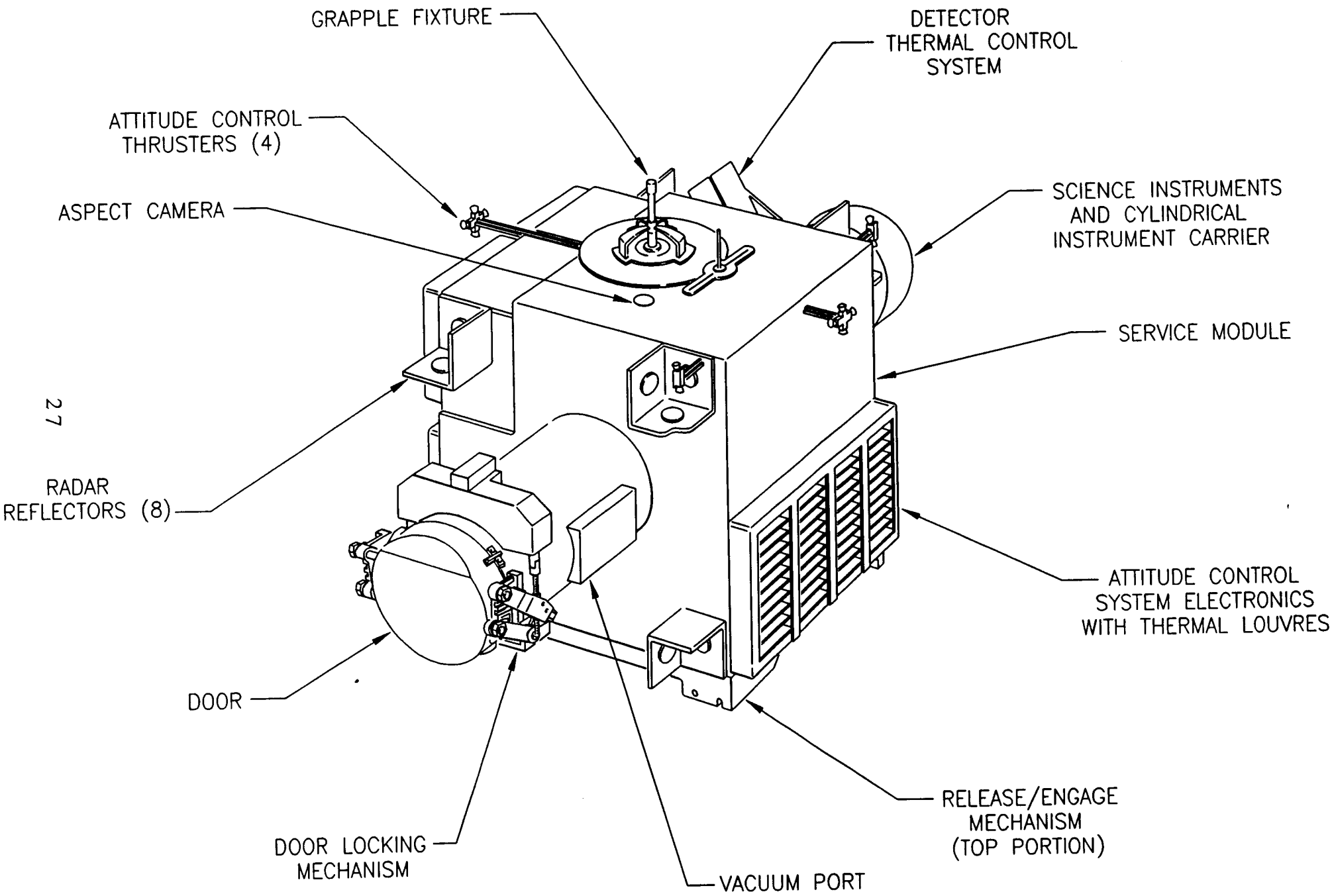
GRAPPLE FIXTURE
DETECTOR THERMAL CONTROL SYSTEM
ATTITUDE CONTROL THRUSTERS (4)
ASPECT CAMERA
SCIENCE INSTRUMENTS AND CYLINDRICAL INSTRUMENT CARRIER
SERVICE MODULE
RADAR REFLECTORS (8)
ATTITUDE CONTROL SYSTEM ELECTRONICS WITH THERMAL LOUVRES
DOOR
RELEASE/ENGAGE MECHANISM (TOP PORTION)
DOOR LOCKING MECHANISM
VACUUM PORT

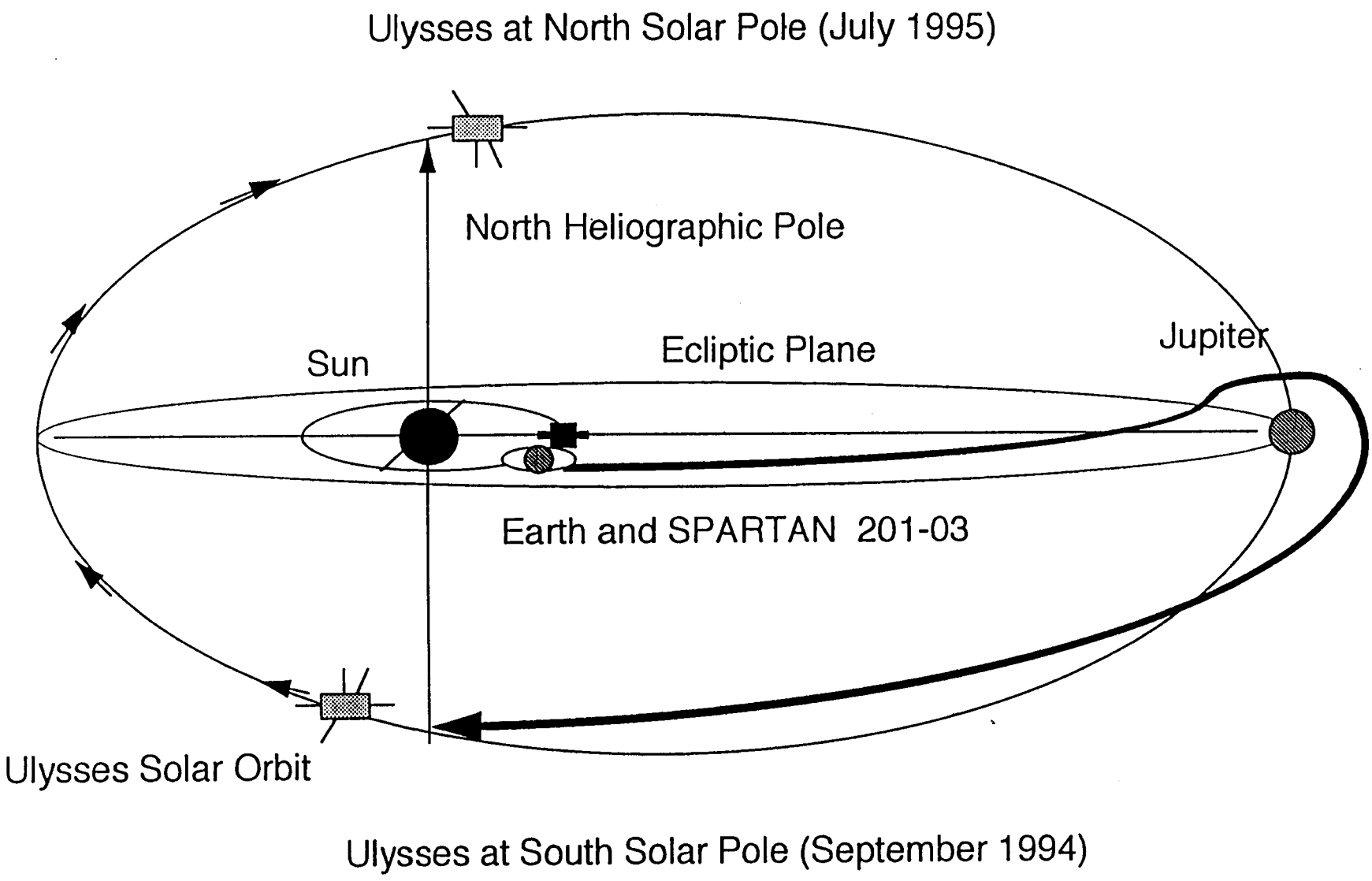

Earth-Sun Relationship During Joint SPARTAN-Ulysses Operations

Science Background

Why Investigate the Corona and Solar Wind?

The modern world is becoming increasingly dependent upon advanced communication, navigation, and other technologies. These technologies have occasionally fallen victim to disruptions in operation caused by changes in "space weather" due to solar variations. Earlier this year NASA's Wind spacecraft determined that space weather effects were the primary reason that two spacecraft -- Anik E-1 and GOES-8 -- experienced equipment problems last year. Therefore, knowledge of the influences of the Sun upon the Earth is not only important, but ultimately required for optimal design and operation of some of these key systems.

The Sun is a magnetic variable star whose energy -- including heat, light, X-rays, gamma-rays and the solar wind -- dominates and powers the solar system. The thin, hot upper atmosphere of the Sun, called the solar corona, achieves enormous temperatures -- about two million degrees -- and is the interface between the Sun and the solar wind. The solar wind is a continual torrent of electrically charges particles blown away from the Sun in all directions.

Gusts in the solar wind flowing past the Earth's magnetic field are responsible for disruptions felt on Earth associated with space weather. The interplay of forces is responsible for dramatic global effects. One spectacular example of the effects of this interplay in the Earth's polar atmospheres are aurora, called the Northern and Southern lights. Other more indirect effects of the solar wind may be highly disruptive, such as electric power distribution system failures, radio communication disruptions, aerial magnetic prospecting or surveys, and diminished performance and reliability of spacecraft in Earth orbit.

Additional background information and graphics on Spartan 201, Ulysses, and the Sun may be obtained from the World-Wide Web directly through the Spartan 201-03 Home Page at: http://umbra.gsfc.nasa.gov/spartan or via links through the STS-69 Mission Home Page at: http://shuttle.nasa.gov

Key Spacecraft Characteristics

Mass:	2,845 lbs. with instruments
Power:	28 Volt DC batteries, 18 kwh capacity
Command and Data System:	Pulse Code Modulation (PCM) system with 10 gigabyte tape recorder for science and engineering data storage onboard
Attitude Control System:	Three axis stabilized cold gas (GN2) pointing system, +/- 30 arc-sec accuracy using Sun sensors

Construction:	Reusable bolted aluminum service module and instrument carrier
Communications:	In-bay communication through Shuttle laptop computer also known as the Payload General Support Computer, used for final solar target input. No communication while in free-flight
Science Mission Duration:	45 hours of free-flight
Advanced Instrumentation Systems:	(1) UVCS: first spectral diagnostics of coronal proton temperature, and coronal bulk flows (2) WLC: first externally occulted orbital coronagraph with a two-dimensional solid-state detector for precision photometry.

Mission Operations

After the Spartan is deployed by the Shuttle, the spacecraft operates on its own for 43 hours, achieving a maximum distance of 70 to 100 nautical miles from the Shuttle at mid-mission.

After its independent operation, Spartan is placed into a safe-hold condition, and is recovered and placed into the Shuttle cargo bay. The internal tape recorder is removed from the spacecraft after landing and data are recovered during tape playback.

Background

The Spartan program is designed to provide easy and relatively inexpensive access to Earth orbit via the Space Shuttle for science experiments. Spartan's design consists of a basic carrier, which, with the addition of a science experiment, becomes a complete spacecraft designed to meet specific science objectives on each mission. Spartan missions include stellar, solar, Earth fine-pointing, and microgravity science and technology experiments requiring space exposure away from the Space Shuttle.

The Spartan program was conceived in the mid-1970s and developed by the Special Payloads Division, Goddard Space Flight Center, and the U.S. Naval Research Laboratory, Washington, DC, to extend the capabilities of sounding rocket-class science experiments by making use of the Space Shuttle.

In June 1985, a Spartan mission successfully carried an X-ray telescope aboard STS-51G. Another carrier, Spartan Halley, was on board Shuttle Mission STS-51L. In April 1993 and September 1994, Spartan 201 was flown aboard the Space Shuttle Discovery on missions STS-56 and STS-64. The Spartan 204 carrier system was carried aboard STS-63 in February 1995.

The Spartan project is managed by NASA's Goddard Space Flight Center for the Office of Space Science, Washington, DC. Goddard provides the Spartan carrier and manages its integration with the Shuttle.

Spartan Team

Spartan 201-03 Project Manager:	Craig Tooley, Goddard Space Flight Center Greenbelt (GSFC), MD
UVCS Principal Investigator:	Dr. John Kohl, Smithsonian Astrophysical Observatory, Cambridge, MA
WLC Principal Investigator:	Dr. Richard Fisher, GSFC
Space Physics Division Director:	Dr. George Withbroe, NASA Headquarters, Washington, DC
Spartan Program Manager:	Paul DeMinco NASA Headquarters,
Special Payloads Division Director:	Robert Weaver, GSFC
Discipline Scientist for Solar Physics:	Dr. William Wagner, NASA Headquarters
STS-69 Mission Scientist:	Dr. Richard Fisher, GSFC

International Extreme Ultraviolet Hitchhiker (IEH-1)

IEH-1 is the first of five planned flights to measure and monitor long-term variations in the magnitude of absolute extreme ultraviolet (EUV) flux coming from the Sun, and to study EUV emissions from the plasma torus system around Jupiter originating from its moon Io.

These observations are accomplished by the two complementary experiments that comprise IEH, the Solar Extreme Ultraviolet Hitchhiker (SEH) and the Ultraviolet Spectrograph Telescope for Astronomical Research (UVSTAR).

SEH and UVSTAR are international cooperative investigations. International partners in IEH-1 from the Italian Space Agency will study the EUV emission of hot stellar objects. The NASA portion of the science is sponsored by the Solar System Exploration Division, NASA Headquarters.

The EUV spectrum contains very short wavelength light that does not penetrate the Earth's atmosphere. Because these wavelengths are blocked by the atmosphere, scientists must use instruments above the atmosphere to study this portion of the solar flux. Useful models of the Earth's atmosphere (or any other planetary atmosphere) require accurate knowledge of the sun's absolute EUV irradiance. It is widely recognized in the scientific community that more accurate long-term solar measurements of this type are urgently needed, given that the solar spectrum changes from day to day, from one solar rotation to the next, and it changes even more dramatically over the 11-year solar cycle.

Solar Extreme Ultraviolet Hitchhiker (SEH)

SEH is a set of instruments designed and built to provide research scientists with a tool to accurately measure solar flux (the amount of light passing through a given area in a given time) in the Extreme Ultraviolet (EUV) region of the solar spectrum.

Using an EUV solar spectrometer, a device that measures the wavelengths of non-visible light, the SEH instrument will take a photograph of the EUV solar spectrum between 250 and 1700 angstroms. (The shortest wavelength of light which we can see with our eyes is deep blue and has a wavelength of 4,000 angstroms. The longest is red with a wavelength of 7,000 angstroms. The light this instrument will view on STS-69 is a *very deep blue*) SEH also takes measurements with gas cell experiments, using helium and neon gas. These gas cells provide extremely accurate brightness-type measurements of the solar EUV, much like a light meter on a camera.

Relatively little is known about this important EUV energy source, even though there have been previous missions conducted to measure the solar EUV radiation. This is because absolute measurements in the EUV are difficult, and EUV-related technology is still maturing.

This difficulty is well known, and most past missions have produced data with rather large uncertainties, due primarily to instrument calibration uncertainties and time-dependent instrument sensitivity changes which are difficult to separate clearly from the variability of solar EUV emissions. The stability of the SEH instrument removes these difficulties.

The SEH set of instrumentation was most recently flown successfully on a sounding rocket mission on September 4, 1990. The combination of spectral and brightness data reveals not only what wavelengths are in the solar EUV spectrum, but also provides an exact measurement of the absolute flux in that region, providing the most reliable absolute solar EUV data available.

The SEH experiment was developed and built at the University of Southern California, with Dr. Darrell Judge as the principal investigator and Don McMullin as the experiment manager.

Consortium for Materials Development in Space Complex Autonomous Payload (CONCAP IV-03)

CONCAP IV-03 is the third flight of an experiment that studies the growth of organic nonlinear optical (NLO) crystals and thin films. The materials being used are of great interest because they can be used in the photonics industry. Photonics is the use of laser light instead of electrons through wires to send bits of information. The advantage of photonics is the elimination of mechanical components, switches, and wear items, and the increased speed of information transferal that lasers offer.

NLO materials are the key to many optical applications now and in the future, with optical computing being a prime example. Many studies have suggested that the photonics industry ultimately will grow to the scale of the current electronics industry. Just as material improvements in silicon were essential to electronics, so too are improved optical materials required for advances in photonics. NLO materials play the same role in photonics and optoelectronics that semiconductors do in the electronics industry. The issue in this project is whether crystals grown in microgravity can speed the evolution of photonics.

A total of two crystals and 45 thin films will be grown. It is anticipated that the lack of gravity will achieve two goals: it will avoid convection, leading to crystals with more uniform composition; and it will avoid the deformation of the crystals under their own weight "sagging" at the relatively high growth temperatures where they are extremely soft.

Nonlinear optical crystals have two important properties: frequency doubling and the pockets effect. When a laser beam passes through the crystal it comes out with twice the frequency of the original beam, a phenomenon known as "frequency doubling." Frequency doubling is important because it doubles the range of frequencies available for laser applications. Currently, lasers only

operate at a limited number of frequencies with some very important frequencies missing for scientific and commercial applications. When an electric field is applied to some NLO materials, the index of refraction of the material changes, a phenomenon known as the "pockets effect." When the index of refraction changes, so does the path of light traveling through the crystal. The pockets effect allows a crystal to act as a high speed switch.

CONCAP IV-03 is contained in a Hitchhiker canister and uses the Hitchhiker-Jr (HH-J) carrier avionics system. This experiment is the first to use HH-J which utilizes the Payload and General Support Computer located in the aft flight deck and operated by a crewmember.

CONCAP IV-03 is managed by the Consortium for Materials Development in Space, at the University of Alabama at Huntsville. The experiment manager is Bill Carswell.

Shuttle GLO Experiment (GLO-3)

This experiment originated as the "Shuttle Glow" experiment sponsored by the USAF/Phillips Laboratory. It also is referred to as the Arizona Airglow Experiment. The nature of the instrument makes it ideal for studies of Earth's thermosphere. Consequently, it has become a joint program with NASA's Space Physics Division of the Office of Space Science.

Scientists continue to investigate the mysterious shroud of luminosity, called the "glow phenomenon," observed by astronauts on past Shuttle missions. Theory suggests that the glow may be due to atmospheric gasses on the windward or ram side surface of the Space Shuttle colliding and interacting with gaseous engine effluents and contaminate outgassing molecules. The glow intensity is weak, decreases with altitude and requires some special conditions for good detection -- both the Sun and Moon must be below the horizon, for example, so the spatial extent of the glow will be mapped precisely (0.1 degrees). The effects of ambient magnetic field, orbit altitude, mission elapsed time, Shuttle thruster firings, and surface composition on the intensity and spectrum of the glow also will be measured. An optical emission model will then be developed from the data.

According to Dr. David J. Knecht, Phillips Laboratory program manager for GLO, the experiment consists of imagers and spectrographs, which are bore-sighted to the imagers, so that both sensors are focused onto the same area of observations, e.g. the Shuttle tail. Imagers serve to unambiguously identify the source region of the glow spectrum as well as to map the spatial extent of the luminosity. Unique features of the sensors are their high spectral and spatial resolution. Each spectrograph employs a concave holographic grating that focuses and disperses light within a small field of view (0.1 by 8.5 degrees) over the wavelength range of 115-1100 nanometers. The sensor comprises 9 separate channels, each of which operates simultaneously and independently, to cover individual segments of the spectrum.

The Shuttle glow experiments are short compared to the total flight time of the mission; therefore, the remainder of the flight is dedicated to studies of Earth's atmosphere. The scientific objectives are related to the Ionosphere, Thermosphere and Mesosphere section of the NASA Space Physics Division. Active participants who have ground-based instrumentation try to make observations throughout the campaign. The data is correlated and deposited in a data bank at the National Center for Atmospheric Research, Boulder, Colorado, for use by the community. The coordination of this data is important to relate local observation to the global picture provided by the GLO observations from the Shuttle.

Dr. Edmond Murad from the Phillips Laboratory and Dr. A. Lyle Broadfoot from the University of Arizona are co-principal investigators on GLO.

Ultraviolet Spectrograph Telescope for Astronomical Research (UVSTAR).

Response in the solar system to the solar input measured by SEH will be observed by a complementary set of instruments called UVSTAR. On this Shuttle mission, the UVSTAR instrumentation will measure EUV and Far Ultraviolet (FUV) emissions in the Jovian system, and the SEH will provide the solar flux data needed for proper context.

UVSTAR is a pair of telescopes with imaging spectrographs that are sensitive to EUV and FUV wavelengths, from 500-850 angstroms and 800-1250 angstroms respectively. From the Space Shuttle, UVSTAR will form spectrally resolved images of stars and extended emission regions such as the Io plasma torus. Observing time will be shared to achieve objectives in both planetary science and stellar astronomy.

UVSTAR offers an important advantage for Io torus research in its capability to form simultaneous images of the torus in each of its brightest emission lines. The spectral dispersion is great enough to separate images of most of the important emissions.

The EUV spectrum of the plasma torus is rich in information about the ion composition, density, and electron temperature of the plasma. Studies of the spectrum and shape of the torus will help answer fundamental scientific questions about the source of the energy and how material becomes a part of the torus.

Although ground-based studies of torus emissions at visual wavelengths have added much to our knowledge of this plasma, measurements in the EUV offer a more direct means of studying certain processes in the torus. Recent EUV measurements by the Hopkins Ultraviolet Telescope on the Astro-2 Shuttle mission and the Extreme Ultraviolet Explorer spacecraft have emphasized the importance of this wavelength range.

UVSTAR also will complement and extend observations planned by the Galileo spacecraft, which arrives in orbit around Jupiter on December 7. Galileo's orbital geometry limits its opportunities for viewing the plasma torus with its UV instruments, especially with the EUV spectrograph.

UVSTAR will provide observations of the Jovian system at greatly improved spectral resolution. The imaging spectrographs will measure the intensity of several important emission lines of ionized sulfur and ionized oxygen as a function of position and time in the torus, measure molecular and atomic hydrogen from Jupiter's dayglow and aurora, and possibly help to clarify the coupling between the torus and the aurora.

UVSTAR includes capabilities for independent target acquisition and tracking. Rough pointing will be provided by orienting the Shuttle. The finder telescope will locate the target and move the optical axis to it. Pointing control will then be transferred to the tracker telescope. A computer-controlled digital feedback system will hold the UVSTAR on target by canceling the Shuttle's attitude control motions.

UVSTAR was prepared for flight jointly by principal investigators Dr. A. Lyle Broadfoot of the Lunar and Planetary Laboratory, University of Arizona and Dr. Roberto Stalio of the Center for Advanced Research in Space Optics, University of Trieste, Italy. Dr. Broadfoot is the lead principal investigator for the Io plasma torus observations. Dr. Stalio is the lead principal investigator for the astronomical observations.

Capillary Pumped Loop / Get Away Special Bridge Assembly (CAPL-02/GBA)

The combined CAPL-2/GBA (6) payload consists of the CAPL-2 Hitchhiker payload, the Thermal Energy Storage-2 (TES-2) payload, and five GAS payloads on a single cross-bay structure called the GBA.

The Shuttle Space Payloads Project (SSPP) Office has responsibility for the mission management, safety, payload integration, and mission operations of the payload. Chris Dunker, from SSPP, is the mission manager.

Capillary Pumped Loop (CAPL-2)

The CAPL-2 payload is an in-orbit microgravity demonstration of the full-scale capillary pumped loop system planned for the Earth Observing System (EOS) Program. The CAPL-2 payload is a reflight of the CAPL-1 Hitchhiker payload flown on STS-60 in February 1994, with modifications to enhance the startup of its capillary system. The CAPL-2 flight will verify the heat transport requirements of the thermal control system under design for the EOS.

This experiment uses an evaporator plate with a capillary pump that vaporizes a liquid ammonia working fluid by the use of heaters. The vapor ammonia then travel through a three-meter-long line to heat exchangers, where the vapor is condensed to a liquid and returned to the evaporator plate via a three-meter-long liquid line. Heat rejection is accomplished via heat pipes that carry the heat from the exchangers to a radiator. A unique feature of the CAPL-2 is that all of the pumping is done by capillary forces, with no mechanical moving parts. The CAPL-2 utilizes separate electronics control modules for telemetry, command, and power. The CAPL-2 electronics are, in turn, connected to the Hitchhiker avionics as a standard, easy-to-use Shuttle carrier system. During the mission, a control center at Goddard will issue commands to the CAPL-2 experiment, monitor its performance and conduct real-time mission analysis on the CAPL-2 system.

The Capillary Pumped Loop is sponsored by NASA's Mission to Planet Earth and developed by the Goddard Space Flight Center Thermal Engineering Branch with Jentung Ku as the principal investigator. Dan Butler is the experiment manager.

Thermal Energy Storage (TES)

The Thermal Energy Storage (TES-2) experiment also is part of the CAPL-2/GBA-6. The TES-2 payload is designed to provide data for understanding the long-duration behavior of thermal energy storage fluoride salts that undergo repeated melting and freezing in microgravity. The TES-2 payload is designed to study the microgravity behavior of voids in Lithium Fluoride-Calcium Fluoride eutectic, a thermal energy storage salt. Data from this experiment will validate a computer code called TESSIM, useful for the analysis of heat receivers in advanced solar dynamic power system designs.

Solar dynamic power systems provide power by converting solar energy to electrical power. During solar conditions some of the Sun's energy is also used to melt a thermal energy storage salt which resides in a heat receiver. In shade, or eclipse conditions, the thermal energy salt freezes giving up its thermal energy such that electrical power may be continually provided.

TES-2 occupies a standard five cubic-foot Get Away Special canister and is expected to develop internal temperatures in excess of 700 degrees Celsius in order to melt the fluoride salts. When the thermal energy salt is melted, it expands approximately 30 percent in volume. As the thermal salt cools, it solidifies and shrinks, thus causing voids or pockets to form in the salt. This void formation affects both the heat absorption rate of the salt, and the design of the heat receiver containers holding the salt.

Repeated melt/freeze cycles will characterize the void formation and movement of the void in the salt. Understanding and predicting the melt/freeze behavior of contained thermal energy storage salt in the on-orbit microgravity environment will lead to an improved design for solar dynamic system heat receivers.

TES-2 is the second of four flight experiments. It is flying as a Complex Autonomous Payload (CAP) managed by the Shuttle Small Payloads Project at Goddard Space Flight Center, Greenbelt, MD.

The TES experiment conception, design and fabrication took place at NASA's Lewis Research Center, Cleveland, OH. Carol Tolbert is the TES-2 principal investigator and Frank Robinson Jr. is the TES-2 project manager.

GET AWAY SPECIAL (GAS) PAYLOADS

Four Get Away Special (GAS) payloads are planned for STS-69. Each will be contained in a standard five-cubic-foot canister. The four payloads are as follows:

G-515
European Space Agency, Noordwijk, The Netherlands

The **Control Flexibility Interaction Experiment** will study active damping control loops using a flexible plate and two piezo (pressure) actuators for better understanding of the interaction of spacecraft attitude and orbit control systems with spacecraft structures.

This experiment will verify the feasibility of an active damping system, autonomous in operation, as part of an overall spacecraft control system. The experiment will show through a scaled simulation a cantilevered, flexible plate being perturbed and then having its motion detected and damped automatically.

The experiment duration will be around two hours and will include several runs of the perturbation - control loop. Expected disturbances induced by Space Shuttle maneuvers are welcome to proof of the concept of active damping.

Since 1990, the In-Orbit Technology Demonstration Program of the European Space Agency has flown four Get Away Special payloads and one Hitchhiker payload on board a U.S. Space Shuttle.

G-645
Millcreek Township School District, Erie, PA
McDowell High School, LORD Corp.

G-645 will investigate the performance of Electrorheological (ER) fluid-filled beams as structural dampers in space. The experiment consists of two instrumented aluminum beams filled with ER fluid. The beams are moved from rest into a deflected position by an actuator; they are then held in this position by electro-magnets. A 5000-volt current is applied to the beams, activating the ER fluid. On a command from the computer, the beams are released, and the frequency and decay rate are measured and recorded on a computer chip. The cycle is repeated without the 5000-volt application, and the full test is repeated six times each hour during the first three days of the flight.

ER fluid is such that when it is subjected to an electric field, its flow characteristics are changed. The fluid becomes more viscous and exhibits more resistance to shear stress which increases the damping of the fluid.

The objective of this payload is to conduct a structural damping evaluation of ER fluid-filled beams in a space environment. By subjecting the ER fluid-filled beams to launch, orbit, and re-entry conditions, the vibratory performance of these beams will be monitored and the effect of microgravity determined.

G-702
NASA Lewis Research Center, Cleveland, OH

The Microgravity Smoldering Combustion (MSC) experiment, will study the effects of smoldering combustion in a long-term microgravity environment. This experiment will focus on one-dimensional smoldering of polyurethane foam.

Smoldering is a non-flaming form of combustion that takes place in the interior of porous combustible materials. Common examples of smoldering are non-flaming embers, charcoal briquettes, and cigarettes. The objective of the study is to provide a better understanding of the controlling mechanisms of smoldering, both in microgravity and Earth gravity. As with other forms of combustion, gravity affects the availability of air and transport of heat, and therefore the rate of combustion. The results of the microgravity experiments will be compared with identical ones carried out in Earth's gravity. They also will be used to verify present theories of smolder combustion. The results of the study will provide new insights into the process of smoldering combustion.

Professor Carlos Fernandez-Pello of the University of California, Berkeley, is the principal investigator for the MSC experiment. Dr. David Urban of NASA's Lewis Research Center is project scientist, and John M. Koudelka of Lewis is project manager.

G-726
NASA Langley Research Center, Hampton, VA

The Joint Damping Experiment (JDX) is a structural dynamics experiment designed to study the non-linear, gravity dependent behavior of a pin-jointed truss. A precise knowledge of the dynamics and damping of space structures is vital to the robust design of future NASA missions involving precision structures. Many proposed designs for large space structures use light-weight trusses composed of high-stiffness members which exhibit very little damping. Deployable truss structures using pinned joints typically have significantly higher damping than erectable trusses using "tight" mechanical joints. However, joint damping is difficult to predict and highly dependent on preload across the joint interface.

JDX will allow comparison of damping in microgravity and 1-G environments. Flight testing has previously been conducted on an aircraft which provides a short duration microgravity environment.

The JDX test article consists of three cubic (8x8 inches) bays of a truss structure mounted within a GAS canister. One end of the structure is cantilevered to the bottom of the GAS canister. A mass is attached to the free end to lower the fundamental resonant frequencies of the structure. A controller/data acquisition system, an excitation assembly consisting of linear actuators, linkages, and electromagnets, plus a set of sealed batteries, also are housed.

JDX is designed to be fully autonomous. On ascent, a baroswitch applies power to the controller. During the first astronaut sleep period (when vehicle accelerations are minimal), the controller conducts a series of tests. During each of the 30 planned tests, one of three vibration modes of the truss is excited and the resulting vibration decay is recorded.

The JDX is conducted by the Department of Mechanical and Aerospace Engineering, Utah State University. JDX is funded by the NASA Office of Space Access and Technology through the In-Space Technology Experiments Program. Technical oversight and project administration is provided by NASA's Langley Research Center. JDX is designed to be a relatively simple and inexpensive space flight experiment and was competitively selected by NASA for its innovative approach to the study of structural dynamics in space. JDX and similar projects provide the university community with a unique opportunity to perform basic engineering science experiments in the space environment and to contribute to the nation's space expertise.

EXTRAVEHICULAR ACTIVITY DEVELOPMENT FLIGHT TEST-2

Two astronauts will leave Endeavour's crew cabin for about six hours on the 10th day of the mission to perform several tasks that will broaden the capabilities and experience base for building and maintaining the International Space Station and for other future spacewalks.

The extravehicular activity, conducted by Mission Specialists Jim Voss and Michael Gernhardt, supports four different Detailed Test Objectives (DTOs).

DTO 833 is designed to evaluate spacesuit design modifications to protect spacewalkers from the extremely cold space environment and their ability to perform in such conditions. At the start of the EVA, one of the crewmembers will install two thermal cubes in the payload bay to collect temperature data on the space environment. One cube will be mounted on the end of the Shuttle' s robot arm, and the other cube will be mounted at the task board worksite.

As another part of the test, engineers will collect temperature data within the spacesuit throughout the entire spacewalk. Temperature data also will be collected on modified crew garments which are designed to bypass the present Liquid Cooling Ventilation Garment.

DTO 671 consists of a number of tasks designed to evaluate and verify specific assembly and maintenance tasks for the Space Station. Each of the two EVA astronauts will spend about an hour performing a variety of tasks at a board mounted on the starboard side of the payload bay. The tasks include working with handrails, fasteners and connectors while the spacewalker is both free-floating and positioned in a fixed foot restraint. The amount of time and effort required for specific tasks also will be assessed during this time.

Throughout the EVA, any specific instructions the crew member may need will be displayed on an Electronic Cuff Checklist, which represents **DTO 672**. The checklist, which has been tested on two previous missions, is being flown to demonstrate its on-orbit use and to gain the experience necessary to move toward operational use.

Comments from the crewmembers on all of the tests will be evaluated as part of **DTO 1210**, which will help ground crews improve EVA operations.

For the spacewalk, Voss will be designated as EV1 and will have red stripes around the legs of his spacesuit, while Gernhardt will be EV2. Pilot Ken Cockrell will assist the spacewalkers from inside the crew cabin.

The spacewalk is the 30th EVA of the Shuttle program.

NATIONAL INSTITUTES OF HEALTH-CELLS 4

Effect Of Space Flight On Bone Cell Formation And Loss During Space Flight

Principal Investigator:
Dr. Russell T. Turner
Mayo Clinic
Rochester, MN

Weightlessness results in bone loss. The bone loss is similar to that which occurs in people who undergo prolonged bed rest or, in some cases, lose the use of one of their limbs due to injury or disease. The exact cause of the bone loss is not yet clear but is at least partially due to decreased activity of osteoblasts, the cells which produce the matrix which mineralizes to become bone. Weightlessness results in decreased bone formation in rodents, as well as humans. Studies performed on rats implicate a protein which is produced by bone cells and is important in the communication between cells. The gene for that protein was found to be expressed in bone at reduced level immediately following space flight but that level was dramatically increased (within 24 hours) when normal activity was reestablished after landing.

This experiment will determine if gene expression is reduced in cultured bone cells following space flight and how quickly the levels return to normal after flight. Results from this experiment will help determine the usefulness of cultured bone cells in understanding how gravity functions to maintain bone cell activity.

Osteoblasts And Bone Formation In Microgravity

Principal Investigator:
Dr. Robert Majeska
Mount Sinai School of Medicine
New York, NY

Bone loss during space flight is well documented, but remains not yet fully understood. Among the unanswered issues are the direct effects which microgravity exerts on bone cells, and the mechanisms by which these cells recognize changes in gravity. This study will focus on bone cells of the osteoblast family, which synthesize bone matrix and also may participate in its breakdown (resorption) by regulating the formation and activity of bone-resorbing cells. The experiment will test the hypothesis that microgravity can produce direct effects on osteoblastic cells similar to those of regulatory hormones. In addition, the study will examine whether microgravity alters the interaction of osteoblastic cells with their matrix, resulting in changes in shape or cellular organization known to affect cell function.

In this study, cells will be cultured in the middeck compartment of the Shuttle in the Space Tissue Loss culture device. Parallel control cultures will be maintained on Earth under identical conditions. During the flight, batches of

both control and experimental cells will be fixed for analysis and samples of culture medium will be collected for biochemical changes. Following the flight, the cells will be analyzed to identify changes in shape and function. Samples of medium culture will be analyzed to identify the presence of bone matrix proteins and matrix-degrading enzymes which may participate in early stages of bone change.

The NIH-C4 payload is sponsored by NASA's Office of Life and Microgravity Sciences and Applications and the National Institute of Arthritis and Musculoskeletal Diseases.

COMMERCIAL GENERIC BIOPROCESSING APPARATUS (CGBA-7)

General

STS-69 will mark the seventh flight of BioServe's Commercial Generic Bioprocessing Apparatus (CGBA-7). BioServe is a NASA Center for the Commercial Development of Space based at the University of Colorado in Boulder, CO, and at Kansas State University in Manhattan, KS. The CGBA is a middeck-locker secondary payload that serves as a housing, incubator and data collection point for BioServe's Fluids Processing Apparatuses (FPAs). FPAs are multi-purpose devices that are essentially multi-chambered syringes that, upon activation, permit fluids to be mixed. After a specified period of time, the FPAs can be activated again to "fix," or stop, an experiment prior to return to Earth. CGBA-7 will support experiments in pharmaceuticals testing and biomedicine, bioprocessing and biotechnology, agriculture and the environment.

One of the strengths of the CGBA/FPA payload is that it is capable of addressing a wide variety of experimenter needs. The CGBA/FPA also has proven to be an exceptionally reliable payload: quality sample/data return rates from previous flights have exceeded 99%. Highlights of the experiments to be flown in the CGBA during the STS-69 mission include:

Bacteriorhodopsin Polymerization

(Manufacture of Uniform Three-Dimensional Polymer Matrices Containing Bacteriorhodopsin for use in Memory Architectures)

Principal Investigators: Dr. Robert Birge, Deshann Govender, Center for Molecular Electronics, University of Syracuse, NY

Bacteriorhodopsin is a protein that has promise as a data storage medium. It is hoped that access to microgravity will permit the formation of more homogenous bacteriorhodopsin polymers. During the STS-69 mission, BioServe will assist Dr. Birge of the Center for Molecular Electronics (a consortium of university and industry with interests in protein-based mass memories) in his efforts to optimize the formation of the bacteriorhodopsin matrix needed to develop the protein matrix materials needed for improved three-dimensional optical memory storage devices. Bacteriorhodopsin-based memories offer the promise of exceptionally high data storage densities for future computer applications.

Water Purification

(Disinfection of Pseudomons aeruginosa with Low Levels of Polyiodide, Silver, Copper, and Silver/Copper Resins)

Principal Investigator: Dr. George Marchin, Kansas State University.

Kansas State University's Dr. George Marchin, working with BioServe Affiliate WTC-Ecomaster (Minnesota), will determine if a combination of silver and copper resin materials will be effective in disinfecting Pseudomons bacterial contamination with applications to the microbial check valve used on the Shuttle. In addition to water purification applications in space, products developed by Dr. Marchin have already found wide use in industry for a variety of water purification applications.

Bone Cell Growth in Space

(Development, Growth and Activation of Bone Marrow Macrophages, Phase II)

Principal Investigators: Dr. Keith Chapes, Dr. A. Forsman, Dr. A. Beharka, Kansas State University

This second flight of bone marrow macrophages supports BioServe-affiliate Chiron's (Emeryville, CA) interests in two ways. First, Dr. Chapes and his colleagues seek to test whether the transcription of receptor proteins or cytokines are altered by space flight. A second goal is to determine if culturing the macrophages in an agar culture system alters cell behavior during space flight as compared to ground controls. The information gathered during this flight may contribute to Chiron's growing understanding of immune suppression. This information has application to terrestrial efforts to understand and mitigate immune-related diseases and disorders. For space flight applications, this work may result in therapies or methods that could eventually be used to reduce the risk of infection by astronauts during exposure to space flight. This ability will become progressively more important as astronauts spend more time in space.

Stabilization and Activation of Cells in Space:

(CeReS-Mediated Cell Stabilization and Reversal)

Principal Investigators: Dr. Terry C. Johnson, Dr. H. Fattaey, Kansas State University

Working in collaboration with Dr. Floyd Taub of Syncrocell (Silver Spring, MD), Drs. Johnson and Fattaey have been working with a unique sialoglycopeptide that has the property of stopping the activities of cells in such a way that they can subsequently be "re-activated." The applications for space-based biological research are important: a colony of cells can be "stabilized" prior to launch, "activated" in orbit and, finally,"stabilized" again prior to their return to Earth. This both accommodates launch holds and permits the cells to conduct all of their desired activities in microgravity without the confounding effects of a gravity field. The terrestrial applications for biotechnology applications and a variety of unique disease treatments may be even more significant, however. For example, it may be that desired groups of diseased or cancerous cells can be "stabilized" and subsequently "re-activated" such that drugs can be delivered to the cells when they are most receptive to them. This

has the promise of increasing the effectiveness of existing drugs and therapies considerably.

Growth of Biological Crystals in Space

(Crystallization of Oligonucleotides and Proteins in Space)

Principal Investigators: Dr. Paul Todd, Dr. Michael Sportiello, University of Colorado

Working with researchers from NeXstar (Boulder, CO), Drs. Todd and Sportiello will seek to accomplish two objectives. First, they will attempt to grow large, high-quality crystals of ribonucleic acid in order to determine the three-dimensional structure. Also during the flight of a new, proprietary crystallization methodologies will be investigated which hold the promise of permitting the formation of crystals of higher quality. After the crystals are returned to Earth, they will be subjected to a variety of analysis techniques. With an understanding of the structure of the crystals in hand, researchers will then possess invaluable information that can be used for the design of new drugs.

Dr. George Morgenthaler is the Director of the BioServe CCDS. Dr. Louis Stodieck is responsible for mission management for CGBA-07.

Biological Research in Canister - 06

Principal Investigator:
Dr. Ingrid Block
German Aerospace Research Establishment

The processing of outside signals by mammalian cells is a complex pathway, and gravity is one signal which is received by these cells. The gravity-sensing mechanism within mammalian cells has not been identified. To study this intracellular signal transmission, the Biological Research in Canister-06 (BRIC-06) payload will fly a unicellular eucaryote cell culture of slime mold (*PHYSARUM POLYCEPHALUM)* as a model system. The investigator will examine the cultures for specific chemical concentrations which are signs of the signal transduction process. Dr. Block has flown three previous space flight experiments and has answers to some pieces of the transduction pathway puzzle. The BRIC-06 flight will add another piece to the puzzle of how gravity is sensed within mammalian cells.

The slime mold will be housed inside 36 petri dishes which are stacked inside three aluminum canisters in the Shuttle's middeck area. On flight day-two, crew members will place one set of samples in the gaseous nitrogen freezer which will instantly fix the samples at their current state. This procedure will be repeated on flight day-three for a second set of samples. The third set of samples will remain at ambient temperature throughout the mission. Upon landing, all the samples will be removed from the Shuttle and returned to the landing site laboratory. Ambient samples then will be frozen and shipped, along with the inflight-frozen samples, to Dr. Block's laboratory in Germany.

The Biological Research in Canister payload is the sixth in a series of payloads which studies the effects of microgravity on plants, small animals, and cell cultures. The experiment is sponsored by NASA's Office of Life and Microgravity Sciences and Applications, Wash, DC.

ELECTROLYSIS PERFORMANCE IMPROVEMENT CONCEPT STUDY (EPICS)

Background

Supply of oxygen and hydrogen by electrolyzing water in space will play an important role in meeting NASA's needs and goals for future space missions.

On-board generation of oxygen is expected to reduce the annual resupply weight for the Space Station by approximately 12,000 pounds with an associated reduction in logistics costs. The oxygen generation assembly which was initially baselined for the Space Station Freedom program is the Static Feed Electrolyzer (SFE) manufactured by Life Systems, Inc. The EPICS flight experiment will demonstrate and validate the SFE electrochemical process in microgravity, as well as investigate performance improvements projected possible in a microgravity environment.

The space environment is needed for this experiment because the SFE process has not been operated in microgravity, data on gas and liquid transport in microgravity is very limited, and one-G test results are compromised by buoyancy and by gravity-affected fluid configuration within the electrolysis cells. A lower cell voltage operation may result from microgravity effects on the distribution of liquid electrolyte, the gas/liquid interfaces with the cell, and the capillary forces on fluids within the pores of the electrodes and the electrolyte matrix.

Mission Description

The EPICS experiment will examine the effects of microgravity on electrolyte distribution in the SFE electrolyte retention matrix. This will be accomplished by determining performance characteristics of electrode/matrix assemblies having different matrix thicknesses and electrode pore sizes, and operating at varying current densities. In one-G SFE operation, gravity produces an electrolyte distribution gradient and an electrolyte density gradient in the cell core. Such gradients result from the relative effects of gravity and capillary forces acting on the electrolyte solution within the cell core matrix. If a more uniform electrolyte distribution were to occur in microgravity, then a more efficient electrolysis process could result. Comparison of flight and ground test data collected under the same operating conditions will enable designers to determine if, and by how much, efficiency is enhanced in microgravity. This understanding can then be applied to the development of improved SFE designs.

The experimental hardware consists of two primary hardware assemblies:

a. Mechanical/Electrochemical Assembly (M/EA)
b. Control/Monitor Instrumentation (C/MI)

The M/EA contains the physical capability for conducting the EPICS experiment. It is composed of three separate, self-contained, Integrated Electrolysis Units (IEUs), ancillary components, and the enclosure. Each IEU is made up of an integrated electrolysis cell, a thermal control plate, an O2 accumulator, and a H2 accumulator.

The C/MI controls the operation of the experiment, provides for monitoring and control of critical parameters, and stores experimental data.

The experiment is designed to be self-contained, requiring only electrical energy and cabin air for cooling. The experiment is designed to be compatible with the weight, power, and heat rejection capability of two standard middeck locker spaces. The weight is approximately 93 lbs, and the required power is approximately 230 watts. The heat rejected to the cabin is essentially the power consumed.

The flight of the EPICS is sponsored by the NASA's Office of Space Access and Technology as part of the In-Space Technology Experiments Program. The EPICS payload is being developed by Life Systems, Inc., Cleveland, OH, and is managed by NASA's Johnson Space Center, Houston, TX.

COMMERCIAL MDA ITA EXPERIMENTS (CMIX-4)

CMIX-4 is the fourth in a five-flight program to support commercially driven biomedical research involving NASA, the University of Alabama/Huntsville (UAH) Consortium for Materials Development in Space, and Instrumentation Technology Associates, Inc. (ITA), a small business located in Exton, PA.

The Consortium's research goals for this mission include an analysis of microgravity and its effects on cell change, as prior flight experiments indicate that microgravity slows cell growth. This alteration of cell growth in microgravity may provide important insight into cell changes on Earth and may lead to therapeutic measures to counter cell growth inhibition, loss of bone mass and impaired immune function.

Research also will focus on neuro-muscular development disorders which are of interest to the industrial pharmaceutical and biotechnical research communities.

A third set of experiments will be associated with plant cell growth. Pharmaceutical products from plants have been used for treatment of various types of cancer. Plant products include vinblastine and taxol. Cultured cells from soy bean plants will be flown during this mission to assess the effect of microgravity on growth, development and production of secondary metabolites. These cells, grown in ground-based tests, produce a product with anti-colon cancer activity. Preliminary research indicates that microgravity may foster higher production of this product. Other research experiments will be conducted using the flight hardware provided by ITA.

ITA's portion of the mission concentrates on three research activities: the growth of over a dozen types of protein crystals with emphasis on urokinase protein crystals; microencapsulation of drugs; and the ITA student space education program.

The urokinase experiment is designed to grow protein crystals of urokinase for research linked to breast cancer inhibitors. If the structure of the urokinase protein crystal can be established, an inhibitor drug can be developed to combat breast cancer metastasis. To date, no ground-based research effort has provided urokinase crystals of sufficient size to effectively analyze. It is anticipated that the microgravity environment will enable urokinase protein crystals to be developed with sufficient size and uniformity of structure to be analyzed.

ITA also is working with its partners to explore microencapsulation of drugs (a drug delivery system) to better target the intervention area of tumors without affecting surrounding healthy tissues. These research efforts have considerable potential for the pharmaceutical industry and medical provider community.

A third major effort is ITA's student space experiment outreach program which donates a percentage of the CMIX payload flight hardware and technical support to selected university and high school projects as a means of fostering an interest in the field of space technology. ITA also will have other experiments including an assessment of properties of collagen fibrils grown in space.

This ambitious experiment activity is accomplished through an innovative exchange agreement between NASA and UAH, with a corresponding agreement between UAH and ITA. In exchange for the flight opportunities, ITA provides 50 percent of its privately developed Materials Dispersion Apparatus (MDA) flight hardware capacity to the UAH researchers. ITA markets half of its hardware commercially and provides a turn-key space processing, hardware and payload integration service to domestic and international users, including private sector companies, universities and research institutions. In addition, ITA conducts its own corporate biomedical research projects. This mission will also use Liquid Mixing Apparatus developed by ITA, and BioProcessing Modules provided by UAH. Some of these units will be contained within the Commercial Refrigerator Incubator Module. Others will be located in a separate storage pouch. This configuration of material and fluid mixing flight equipment enables hundreds of separate experiment samples to be flown within a single middeck locker.

A number of researchers will take part in this mission for UAH experiments, including Dr. Millie Hughes-Fulford, University of California at San Francisco; Dr. Mary Ann Priniapato, U.S. Food and Drug Administration; Dr. Edward Piepmeier, University of South Carolina; Dr. Raphael Gruener, University of Arizona; and Dr. Peter Kaufman, University of Michigan. These researchers are collaborating with Dr. Marian Lewis of UAH. ITA research projects and commercial users include two U.S. cancer centers, four U.S. corporations, a JSC researcher, four U.S. universities/research institutions, several international university research organizations including Canada and Germany (INTOSPACE) and one high school.

STS-69 CREW BIOGRAPHIES

Endeavour's ninth mission will be commanded by three-time Shuttle veteran **David M. Walker**. A captain in the United States Navy, Walker, 51, was born in Columbus, GA, but considers Eustis, FL., to be his hometown. He received a bachelor's degree from the U.S. Naval Academy in 1966. After graduating from Annapolis, Walker received flight training from the Naval Aviation Training Command at bases in Florida, Mississippi and Texas. He was designated a naval aviator in December 1967 and proceeded to Naval Air Station Miramar, CA, for assignment to F-4 Phantoms aboard the carriers USS Enterprise and USS America. From December 1970 to 1971, he attended the USAF Aerospace Research Pilot School at Edwards Air Force Base, CA.

Selected as an astronaut in January 1978, Walker has logged a total of 464 hours in space. His first flight was as pilot of STS-51A in 1984. During that mission, crew members deployed Canada's Anik D-2 satellite and Hughes' LEASAT-1 satellite, and carried the first space salvage mission by retrieving the Palapa B-2 and Westar VI satellites for return to Earth.

Walker's second mission was STS-30 in May 1989. The highlight of the four-day mission was the deployment of the Magellan probe. Most recently, he commanded STS-53 in November/December 1992. The crew of five deployed a classified Department of Defense payload and then performed several Military-Man-In-Space and NASA experiments.

Kenneth D. Cockrell, a native of Austin, TX, will serve as the STS-69 pilot. Cockrell, 45, received a bachelor's degree in mechanical engineering from the University of Texas in 1972, and a master's degree in aeronautical systems from the University of West Florida in 1974.

Cockrell received his commission through the Naval Aviation Reserve Officer Candidate Program at Naval Air Station at Pensacola, FL, in December 1972. He was designated a naval aviator in August 1974. Cockrell resigned his commission in 1987 to join the Johnson Space Center as an aerospace engineer and research pilot at Ellington Field, Houston, serving as an instructor pilot and functional check pilot in NASA T-38 aircraft.

Selected as an astronaut candidate in January 1990, Cockrell has had a variety of technical assignments including serving in the Astronaut Office's Operations Development Branch; working on landing, roll-out, tires and brake issues; and serving as CAPCOM in the Mission Control Center for ascent and entry.

Cockrell's first space flight in April 1993 was STS-56, the ATLAS-2 mission. During the nine-day flight, the crew conducted atmospheric and solar studies in order to better understand the effect of solar activity on the Earth's climate and environment.

The Payload Commander for the flight will be Army Lieutenant Colonel **James S. Voss**, Mission Specialist 1.

Voss, 46, was born in Cordova, AL, but considers Opelika, AL, to be his hometown. He has a bachelor's degree in aerospace engineering from Auburn University in 1972 and a master's degree in aerospace engineering sciences from the University of Colorado in 1974.

Upon graduation from Auburn and commissioning as a 2nd Lieutenant, Voss went directly to the University of Colorado to obtain his master's degree under the Army Graduate Fellowship Program. After attending the U.S. Naval Test Pilot School at the Armed Forces Staff College, Voss was assigned to the U.S. Army Aviation Engineering Flight Activity as a Flight Test Engineer/Research and Development Coordinator. He was involved in several major flight test projects before being detailed to the Johnson Space Center.

Voss began working at Johnson in 1984 as a Vehicle Integration Test Engineer. He participated in the STS 51-L accident investigation and supported the resulting reviews dedicated to returning the Space Shuttle safely to flight. He was selected as an astronaut in 1987, and is now a veteran of two Shuttle flights. His first mission, STS-44 in November 1991, included the deployment of a Defense Support Program satellite with an Inertial Upper Stage booster. His second mission was STS-52 in December 1992 during which a classified Department of Defense payload was deployed. He has logged more than 340 hours in space.

Jim Newman, Ph.D., 38, will serve as Mission Specialist 2. Born in the Trust Territory of the Pacific Islands, Newman considers San Diego, CA, to be his hometown. He graduated cum laude with a bachelor's degree in physics from Dartmouth College in 1978. He received a master's and a doctorate in physics from Rice University in 1982 and 1984, respectively. After graduating from Rice, Newman did an additional year of post-doctoral work at Rice before being appointed as an adjunct assistant professor in the Department of Space Physics and Astronomy at the university. That same year, he came to work at Johnson where he conducted flight crew and flight control team training for all mission phases in the areas of Orbiter propulsion, guidance and control. He was working as a simulation supervisor when selected for the astronaut program in 1990.

STS-69 will be Newman's second flight. His first mission was STS-51 in September 1993. During the 10-day flight, crew members deployed the advanced Communications Technology Satellite and the Orbiting and Retrievable Far and Extreme Ultraviolet Spectrometer on the Shuttle Pallet (SPAS) Satellite. Newman was responsible for SPAS operations and conducted a seven-hour spacewalk. He has logged 236 hours in space.

Michael L. Gernhardt, Ph.D., 39, will serve as Mission Specialist 3 for the STS-69 crew.

Born in Mansfield, OH, Gernhardt received a bachelor s degree in physics from Vanderbilt University in 1978, and master's and doctorate degrees in bioengineering from the University of Pennsylvania in 1983 and 1991, respectively.

From 1977 to 1984, Gernhardt worked as a professional deep sea diver and project engineer on a variety of subsea oil field construction and repair projects around the world. He has logged more than 700 deep sea dives and has experience in air, mixed gas, bounce bell and saturation diving.

In 1988, he founded Oceaneering Space Systems, a wholly-owned subsidiary of Oceaneering International. Until his selection by NASA in 1992, he worked on the development of new astronaut and robot-compatible tools for performing maintenance on the Space Station. He also worked on the development of new portable life support systems and decompression procedures for extravehicular activities.

Since coming to NASA, Gernhardt has been detailed to the Shuttle Avionics Laboratory, supported training for the Hubble Space Telescope servicing mission and has worked on a variety of Space Station EVA developments. STS-69 will be his first space flight.

UPCOMING SHUTTLE MISSIONS

MISSION	ORBITER	MAJOR PAYLOADS	TARGET DATE	MISSION DURATION
STS-69	ENDEAVOUR	Wake Shield Facility-2 SPARTAN-201	AUGUST 1995	11 Days
STS-73	COLUMBIA	U.S. Microgravity Laboratory-2	SEPTEMBER 1995	16 Days
STS-74	ATLANTIS	Shuttle-Mir Mission-2	NOVEMBER 1995	6+1 Days
STS-72	ENDEAVOUR	Space Flyer Unit-Retrieval OAST-FLYER	DECEMBER 1995	10 Days
STS-75	COLUMBIA	Tethered Satellite System United States Microgravity Payload-3	FEBRUARY 1996	13 Days
STS-76	ATLANTIS	Shuttle-Mir Mission-3	APRIL 1996	10+1 Days
STS-77	ENDEAVOUR	SPACEHAB-4 SPARTAN-207	MAY 1996	9 Days
STS-78	COLUMBIA	LMS	JULY 1996	14+2 Days
STS-79	ATLANTIS	Shuttle-Mir Mission-4	AUGUST 1996	9+1 Days

Based on February 1995 Manifest

SHUTTLE FLIGHTS AS OF JULY 1995

70 TOTAL FLIGHTS OF THE SHUTTLE SYSTEM -- 45 SINCE RETURN TO FLIGHT

OV-099 Challenger (10 flights)

- STS 51-L 01/28/86
- STS 61-A 10/30/85 - 11/06/85
- STS 51-F 07/29/85 - 08/06/85
- STS 51-B 04/29/85 - 05/6/85
- STS 41-G 10/5/84 - 10/13/84
- STS 41-C 04/06/84 - 04/13/84
- STS 41-B 02/03/84 - 02/11/84
- STS-8 08/30/83 - 09/05/83
- STS-7 06/18/83 - 06/24/83
- STS-6 04/04/83 - 04/09/83

OV-102 Columbia (17 flights)

- STS-65 07/08/94 - 07/23/94
- STS-62 03/04/94 - 03/18/94
- STS-58 10/18/93 - 11/01/93
- STS-55 04/26/93 - 05/06/93
- STS-52 10/22/92 - 11/1/92
- STS-50 06/25/92 - 07/09/92
- STS-40 06/05/91 - 06/14/91
- STS-35 12/02/90 - 12/10/90
- STS-32 01/09/90 - 01/20/90
- STS-28 08/08/89 - 08/13/89
- STS 61-C 01/12/86 - 01/18/86
- STS-9 11/28/83 - 12/08/83
- STS-5 11/11/82 - 11/16/82
- STS-4 06/27/82 - 07/04/82
- STS-3 03/22/82 - 03/30/82
- STS-2 11/12/81 - 11/14/81
- STS-1 04/12/81 - 04/14/81

OV-103 Discovery (21 flights)

- STS-70 July 1995
- STS-63 02/03/95 - 02/11/95
- STS-64 09/09/94 - 09/20/94
- STS-60 02/03/94 - 02/11/94
- STS-51 09/12/93 - 09/22/93
- STS-56 04/08/93 - 04/17/93
- STS-53 12/2/92 - 12/9/92
- STS-42 01/22/92 - 01/30/92
- STS-48 09/12/91 - 09/18/91
- STS-39 04/28/91 - 05/06/91
- STS-41 10/06/90 - 10/10/90
- STS-31 04/24/90 - 04/29/90
- STS-33 11/22/89 - 11/27/89
- STS-29 03/13/89 - 03/18/89
- STS-26 09/29/88 - 10/03/88
- STS 51-I 08/27/85 - 09/03/85
- 51-G 06/17/85 - 06/24/85
- 51-D 04/12/85 - 04/19/85
- STS 51-C 01/24/85 - 01/27/85
- STS 51-A 11/08/84 - 11/16/84
- STS 41-D 08/30/84 - 09/04/84

OV-104 Atlantis (14 flights)

- STS-71 06/27/95 - 07/07/95
- STS-66 11/03/94 - 11/14/94
- STS-46 7/31/92 - 8/8/92
- STS-45 03/24/92 - 04/02/92
- STS-44 11/24/91 - 12/01/91
- STS-43 08/02/91 - 08/11/91
- STS-37 04/05/91 - 04/11/91
- STS-38 11/15/90 - 11/20/90
- STS-36 02/28/90 - 03/04/90
- STS-34 10/18/89 - 10/23/89
- STS-30 05/04/89 - 05/08/89
- STS-27 12/02/88 - 12/06/88
- STS 61-B 11/26/85 - 12/03/85
- STS 51-J 10/03/85 - 10/07/85

OV-105 Endeavour (8 flights)

- STS-67 03/02/95 - 03/18/95
- STS-68 09/30/94 - 10/11/94
- STS-59 04/09/94 - 04/20/94
- STS-61 12/2/93 - 12/13/93
- STS-57 6/21/93 - 7/1/93
- STS-54 01/13/93 - 01/19/93
- STS-47 09/12/92 - 09/20/92
- STS-49 05/07/92 - 05/16/92

News Release

National Aeronautics and
Space Administration

Washington, DC 20546
(202) 358-1600

For Release

July 24, 1995

Douglas Isbell
Headquarters, Washington, DC
(Phone: 202/358-1753)

Franklin O'Donnell
Jet Propulsion Laboratory, Pasadena, CA
(Phone: 818/354-5011)

RELEASE: 95-122

GALILEO ENGINE FIRING SCHEDULED; PRESS BRIEFING TO FOLLOW

NASA's Galileo spacecraft, now homing in on Jupiter, is scheduled to fire its main rocket engine early Thursday, July 27, in a critical maneuver that will put it on course for entry into orbit around the giant planet later this year.

The engine firing for the so-called "orbiter deflection maneuver" will begin at 3:38 a.m. EDT and last five minutes, six seconds. (This is the time when Galileo's radio signal reporting the event is received on Earth. The signal travels at the speed of light, and one-way light time from Galileo to Earth will be about 38 minutes on the day of the maneuver.)

A press briefing originating from NASA's Jet Propulsion Laboratory (JPL), Pasadena, CA, to discuss the Galileo orbiter deflection maneuver, the recent release of Galileo's Jupiter atmospheric probe, and the major scientific goals of the mission, will be carried live on NASA Television at 1 p.m. EDT on July 27.

A two-second firing, or "wake-up burn" of the main rocket engine was successfully completed early this morning. The short burn allowed flight controllers to check out the overall health of the propulsion system in preparation for the longer engine burn on Thursday.

The upcoming rocket firing follows the successful targeting and release of Galileo's Jupiter atmospheric probe on July 13. The atmospheric probe, with no propulsion or guidance system of its own, will continue to freefall toward Jupiter and will enter the planet's atmosphere on December 7.

As planned, Galileo is currently on a course that without further action would send the spacecraft along the same Jupiter-impact trajectory that the atmospheric

-more-

probe is flying. This week's engine firing, however, will deflect the spacecraft off that trajectory and put it on course for its close flyby of Jupiter's volcanic moon Io, which also occurs on December 7.

"With the completion of this maneuver, we're looking forward to the culmination of three weeks of intensive work in targeting the spacecraft for the beginning of its tour of Jupiter," said Galileo Project Manager William O'Neil of JPL. "Everything is going perfectly."

The main engine could not be tested or fired prior to release of the atmospheric probe because the probe was mounted in front of the engine nozzle. Thursday's firing also serves as a demonstration of engine operability for an even larger firing of the same engine during a December 7 maneuver that will brake the spacecraft and allow it to be captured into Jupiter orbit. That engine firing, called Jupiter orbit insertion, will be the largest such maneuver of the Galileo mission.

The orbiter deflection maneuver will provide a change in the spacecraft's velocity of about 140 miles per hour. By comparison, the Jupiter orbit entry maneuver will expend 831 pounds of propellant and result in a velocity change of 1,438 miles per hour.

Galileo was launched in October 1989 aboard Space Shuttle Atlantis from NASA's Kennedy Space Center, FL. Galileo's Jupiter atmospheric probe is managed by NASA's Ames Research Center, Mountain View, CA. The Galileo spacecraft was built and the overall mission is managed by NASA's JPL.

- end -

NOTE TO EDITORS: A new NASA fact sheet is available to news media by calling the NASA Headquarters Newsroom at 202/358-1600. **"Galileo's New Telecommunications Strategy,"** explains the software and hardware changes that are being implemented to enable Galileo to achieve at least 70 percent of its original science objectives while using only its low-gain antenna.

News Release

National Aeronautics and
Space Administration

Washington, DC 20546
(202) 358-1600

For Release

Donald Savage
Headquarters, Washington, DC
(Phone: 202/358-1547)

July 25, 1995

RELEASE: 95-123

NASA RELEASES NEW SCIENCE POLICY GUIDE FOR PUBLIC COMMENT

NASA is seeking public comment on a new science policy guide which will become the agency's major instrument for communication about its conduct of science.

Called "Science in Air and Space: NASA's Science Policy Guide," the policy guide will publish for the first time the framework for pursuing the agency's science goals. The guide is intended for use by the research community, other agencies and branches of government, industry and the American public.

"I ask all participants and beneficiaries to take the time to review, comment and enrich this policy," said NASA Administrator Daniel S. Goldin. "We want this to be America's policy for scientific research in civil air and space, not just NASA's policy. When boldly executed, this policy can make research in air and space much more meaningful, both intellectually and economically, for future generations of Americans."

NASA's Chief Scientist Dr. France Cordova said the policy is a guide which not only addresses the rationale and conduct of the agency's science programs in a rapidly changing environment, but also describes the roles and responsibilities of individuals, groups, institutions and commercial enterprises. Development of the draft policy represents more than a year of effort by the NASA Science Council as well as reviews by non-NASA researchers throughout the country.

"It covers a broad policy landscape and deals with multi-faceted issues," said Cordova. "One of the most far-reaching discussions in the guide is how partnerships -- diverse representations of individuals, groups and institutions -- and contributions by the international scientific community are important to enhance the quality and vitality of NASA's science programs."

- more -

The guide examines the importance of peer review, advisory committees and metrics in assessing quality. According to the guide, among the responsibilities of NASA and its participants are early dissemination of scientific data; education and communicating science to the public; fostering of long-term basic research; and developing and using new technologies to advance science and provide economic returns to the nation.

NASA's science policy guide is consistent with the NASA Strategic Plan and "Science in the National Interest," the President's science and technology policy document released last year. The policy guide covers science research in a broad sense -- fundamental and strategic, basic and applied -- and includes focused scientific research and interpretation that provide the foundation for engineering research, projects and technology.

"This is the first time NASA has had such an all-encompassing research policy. I want to encourage people to feel comfortable communicating and working with us on producing a policy that is relevant and meaningful for all America," said Goldin.

Public comment will be accepted over the next six months. Those with access to the internet can retrieve the document by using a web browser through links from the NASA public affairs home page at "http://www.nasa.gov" under the section "Hot Topics" or directly at "http://dlt.gsfc.nasa.gov/cordova/guide.html" (no quotation marks). In addition, the document will be available via anonymous ftp at dlt.gsfc.nasa.gov, where further instructions may be found in the README file. Responses can be sent via e-mail to comments@admingw.hq.nasa.gov. Copies of the draft policy also are available for review at NASA Centers, or by calling the NASA Headquarters Information Center at 202/358-0000.

The final document is expected to be published following the six-month public comment period.

- end -

EDITOR'S NOTE: Copies of the document are available for media representatives by calling the NASA Newsroom at 202/358-1600.

NASA press releases and other information are available automatically by sending an Internet electronic mail message to domo@hq.nasa.gov. In the body of the message (not the subject line) users should type the words "subscribe press-release" (no quotes). The system will reply with a confirmation via E-mail of each subscription. A second automatic message will include additional information on the service. Questions should be directed to (202) 358-4043.

News Release

National Aeronautics and
Space Administration

Washington, DC 20546
(202) 358-1600

For Release

July 25, 1995

Don Nolan-Proxmire
Headquarters, Washington, DC
(Phone: 202/358-1983)

Mary M. Spracher
Langley Research Center, Hampton, VA
(Phone: 804/864-6527)

RELEASE: 95-124

NASA GEARS UP TESTS ON THE "HOLY GRAIL" OF AERODYNAMICS

After years of planning, NASA is preparing to flight-test a concept designed to improve the aerodynamics of aircraft traveling at supersonic speeds.

The Supersonic Laminar Flow Control (SLFC) experiment is a special structure mounted on the wing of an F-16XL. The structure, known as a "glove," will use a suction panel and suction system to remove air from the wing boundary layer and maintain a smooth, low-drag, or laminar flow. Maintaining laminar flow will decrease drag by reducing skin friction on the surface of the wing.

Such laminar flow control would enable planes to fly on less fuel and with smaller engines. Successful control at supersonic speeds would be a major breakthrough in the field of flight.

"Historically, laminar flow control has been called the Holy Grail of aerodynamics," said Mike Fischer, principal investigator for the project, a collaborative effort led by NASA's Langley Research Center, Hampton, VA.

Successful supersonic laminar flow control could bring the High-Speed Civil Transport (HSCT) one step closer to reality. The HSCT is the conceptual supersonic airliner of the future. Such a plane would fly twice as fast as today's typical airliner and carry approximately 300 to 350 passengers.

-more-

The successful application of laminar flow control to the HSCT may reduce drag enough to decrease takeoff gross weight by 10 percent, an amount roughly equal to an entire load of passengers.

The SLFC glove is designed to fit over the left wing of an F-16XL. The resulting wing extends the basic aircraft's highly swept wing shape to the fuselage, thus more loosely matching the form of the HSCT. The outer surface of the suction panel is made of titanium and perforated with over 10 million laser-cut holes, each 0.003 inches in diameter.

The panel is divided into 20 suction regions, each individually controlled by valves. An onboard turbo compressor will provide the suction. A passive fairing, made of foam and fiberglass, completes the aerodynamic shape of the glove. The passive fairing does not include suction, but simply blends the uniquely shaped wing into the fuselage.

The suction panel has been installed on the wing of an F-16XL at NASA's Dryden Flight Research Center in Edwards, CA. System tests are scheduled to begin in July and the modified F-16XL is expected to begin six months of flight testing in late September. The flight test's objective is to obtain key data which will enable HSCT designers to proceed with confidence.

Development of the suction panel and its sub-systems has been a "big team effort," said Project Manager Jeff Lavell at Langley. Dryden collaborated from the start with Langley's SLFC research team on the experiment planning. A development contract for the suction panel and system was awarded in October 1992 and, based on Langley's overall concept and plans, an industry team of Boeing, Rockwell and McDonnell Douglas formulated the design of the panel and suction system.

The panel was assembled at Boeing and delivered to Dryden in December 1994. Delivery of the suction system, fabricated by McDonnell Douglas, was completed in April 1995.

A smaller suction panel has been flown at Dryden at supersonic speeds on an F-16XL, but the concept has never been demonstrated to this scale. "This is relatively high-risk technology," said Lavell. "If successful, it will have a high payoff," he said.

-end-

NASA press releases and other information are available automatically by sending an Internet electronic mail message to domo@hq.nasa.gov. *In the body of the message (not the subject line) users should type the words* subscribe press-release. *The system will reply with a confirmation via E-mail of each subscription. A second auto message will include additional information on the service. Questions should be directed to (202) 358-4043.*

Video Advisory

National Aeronautics and
Space Administration

Washington, DC 20546
(202) 358-1600

For Release

July 25, 1995

David E. Steitz
Headquarters, Washington, DC
(Phone: 202/358-1730)

VIDEO ADVISORY: V95-110

GALILEO PROBE-ORBITAL DEFLECTION MANEUVER ON NTV

Wednesday's NASA Television video news file will feature animation of the Galileo spacecraft, now homing in on Jupiter, in a critical maneuver that will put it on course for orbit around the giant planet later this year. The animation will begin with the spacecraft's orbiter and probe en route spinning at 10.5 revolutions per minute. Springs will gently push the probe away to begin its journey to enter and study Jupiter's atmosphere. The orbital deflection maneuver will change trajectory of the orbiter to put it on course for orbit around Jupiter. On Dec. 7, 1995, the probe will plunge into Jupiter's clouds as the orbiter receives and records the probe's data thousands of miles overhead. NASA TV also will repeat footage of preparations to flight test a concept designed to improve the aerodynamics of aircraft traveling at supersonic speeds. The Supersonic Flow Control experiment will use an F-16XL wing "glove" with a suction panel to remove air from the wing boundary layer and maintain a smoother, low drag laminar flow. Such laminar flow control would enable planes to fly on less fuel and with smaller engines.

NASA Television video news files air at noon, 3, 6, and 9 p.m. EDT.

ITEM #1: GALILEO PROBE-ORBITAL DEFLECTION MANEUVER TRT: 1:23

Wednesday's NASA Television video news file will feature animation of the Galileo spacecraft, now homing in on Jupiter, in a critical maneuver that will put it on course for entry into orbit around the giant planet later this year.

ITEM #2: REPEAT: SUPERSONIC FLIGHT TESTING TRT: 1:07

Preparations for flight testing of a modified F-16XL specially fitted with a wing "glove" to help reduce laminar flow, increasing aircraft fuel and engine efficiency.

NASA Television is broadcast on Spacenet 2, transponder 5, channel 9, C-Band, located at 69 degrees West longitude, with horizontal polarization. Frequency will be on 3880.0 megahertz, with audio on 6.8 megahertz.

-end-

News Release

National Aeronautics and
Space Administration

Washington, DC 20546
(202) 358-1600

Brian Welch
Headquarters, Washington, DC
(Phone: 202/358-1600)

For Release
July 26, 1995

NOTE TO EDITORS: N95-50

ASTRONAUTS/COSMONAUTS TO NARRATE IMAX FILM AUGUST 2

Astronauts and cosmonauts who participated in the historic link-up of the Space Shuttle Atlantis and the Russian space station Mir will narrate a 16-minute IMAX film clip taken during the recently completed STS-71/Mir 18 mission.

The special showing for local news media will take place at the National Air and Space Museum's Langley Theater beginning at 9 a.m. on Wednesday, August 2. Following the 16-minute film clip, the astronauts and cosmonauts will take questions from the media for about 20 minutes.

Crew members scheduled to attend the screening are STS-71 commander Robert "Hoot" Gibson, pilot Charlie Precourt, mission specialists Ellen Baker, Greg Harbaugh, and Bonnie Dunbar, and Mir 18's commander, Vladimir Dezhurov, flight engineer Gennadiy Strekalov, and U.S. astronaut and cosmonaut researcher Norm Thagard.

Media wishing to attend the event should RSVP with the NASA Newsroom by close of business on August 1. Access to the Air and Space Museum will be through the entrance on the Independence Ave. side of the building. Media can check in at the museum any time after 8:30 a.m.

NASA flew an IMAX camera on STS-71 to record the first-ever docking of the Space Shuttle to the Mir space station. The 70mm film camera provides very high definition pictures which are displayed on large screens by special IMAX projectors.

A limited number of photographs taken from the IMAX film will be available for media, and Beta copies of the movie will be provided to television media.

-end-

NASA press releases and other information are available automatically by sending an Internet electronic mail message to domo@hq.nasa.gov. In the body of the message (not the subject line) users should type the words "subscribe press-release" (no quotes). The system will reply with a confirmation via E-mail of each subscription. A second automatic message will include additional information on the service. Questions should be directed to (202) 358-4043.

Video Advisory

National Aeronautics and
Space Administration

Washington, DC 20546
(202) 358-1600

For Release

July 26, 1995

David E. Steitz
Headquarters, Washington, DC
(Phone: 202/358-1730)

VIDEO ADVISORY: V95-111

TOPSAR, ULYSSES MILESTONE, WETLANDS IMAGES ON NTV

Thursday's NASA Television news file will feature a 3-D visualization created with radar data collected by NASA's airborne topographic synthetic aperture radar (TOPSAR) as gathered over Pasadena, CA. Following an interview on TOPSAR, NTV will air animation and interviews on the Ulysses spacecraft reaching the highest northern latitude in its investigation of the Sun. Satellite images of the Jug Bay Wetlands Sanctuary, MD, will be aired, followed by interviews on NASA's involvement in the Wetlands monitoring. A replay of animation showing the Galileo spacecraft, now homing in on Jupiter, will close out the day's video news file. *NASA Television video news files air at noon, 3, 6, and 9 p.m. EDT.*

ITEM #1: TOPSAR **TRT: tbd**
3-D visualization of Pasadena, CA, area taken by the TOPSAR satellite.

ITEM #2: INTERVIEW WITH DR. HOWARD ZEBKER ON TOPSAR **TRT: 2:00**
Zebker, Assistant Manager of the Radar Science and Engineering Branch of the Jet Propulsion Laboratory discusses the process of TOPSAR data gathering.

ITEM #3: ULYSSES CROSSES THE NORTH POLE **TRT: 1:10**
Animation of the Ulysses spacecraft reaching the highest northern latitude in its investigation of the Sun.

ITEM #4: INTERVIEW WITH DR. EDWARD SMITH **TRT: tbd**
Ulysses project scientist Smith discusses this mission milestone.

ITEM #5: SATELLITE IMAGES OF JUG BAY **TRT: 1:00**
Electronic images of Jug Bay Wetlands Sanctuary, MD, showing water, soil and vegetation.

ITEM #6: JUG BAY WETLANDS SANCTUARY **TRT: 2:00**
Video footage of the Wetlands Sanctuary.

ITEM #7: INTERVIEW WITH ANDREW ROGERS **TRT: 2:00**
Rogers explains the role of the University of Maryland in the Jug Bay project.

ITEM #8: INTERVIEW WITH CHRIS SWARTH **TRT: 2:00**
Swarth explains how the Landsat satellite has helped maintain the health of the Wetlands.

ITEM #9: REPLAY: GALILEO PROBE-ORBITAL MANEUVER **TRT: 1:23**

NASA Television is broadcast on Spacenet 2, transponder 5, channel 9, C-Band, located at 69 degrees West longitude, with horizontal polarization. Frequency will be on 3880.0 megahertz, with audio on 6.8 megahertz.

-end-

News Release

National Aeronautics and
Space Administration

Washington, DC 20546
(202) 358-1600

Ed Campion
Headquarters, Washington, DC
(Phone: 202/358-1780)

Brian Welch
Headquarters, Washington, DC
(Phone: 202/358-1600)

Rob Navias
Johnson Space Center, TX
(Phone: 713/483-5111)

For Release
July 27, 1995

NOTE TO EDITORS: N95-51

NASA BRIEFING TO DISCUSS SHUTTLE BOOSTER STATUS FRIDAY

NASA will hold a briefing for reporters Friday evening to discuss the status of an investigation into erosion seen on Space Shuttle solid rocket booster nozzle O-rings during the last two flights.

The briefing will follow a meeting being held by senior Shuttle managers and a special team formed to look into the O-ring concerns. The meeting, which begins at 3 p.m. EDT, is expected to last for several hours. NASA plans to brief reporters as soon as possible after the meeting concludes.

The briefing, with Director, Space Shuttle Operations Brewster Shaw and Manager, Space Shuttle Program Integration Office Ron Dittemore, will originate from the Johnson Space Center (JSC), Houston. NASA Newsrooms at Headquarters, Washington, DC, Kennedy Space Center, FL, Marshall Space Flight Center, Huntsville, AL, and JSC, will be open to support the briefing. Reporters can call those newsrooms for a status on the time of the briefing, or watch NASA Television for updated information on the briefing status.

Two-way question and answer capability will be available to support the briefing from each of the four NASA locations. NASA Television is carried on Spacenet 2, transponder 5, Channel 9, C-Band, located at 69 degrees West longitude, with horizontal polarization. Frequency is 3880 MHz with audio on 6.8 MHz.

-end-

NASA press releases and other information are available automatically by sending an Internet electronic mail message to domo@hq.nasa.gov. In the body of the message (not the subject line) users should type the words "subscribe press-release" (no quotes). The system will reply with a confirmation via E-mail of each subscription. A second automatic message will include additional information on the service. Questions should be directed to (202) 358-4043.

Video Advisory

National Aeronautics and
Space Administration

Washington, DC 20546
(202) 358-1600

For Release

July 27, 1995

David E. Steitz
Headquarters, Washington, DC
(Phone: 202/358-1730)

VIDEO ADVISORY: V95-112

SHUTTLE O-RING FOOTAGE, PRESS BRIEFING ON NTV FRIDAY

Friday's NASA TV video news file will air video and interviews explaining how the Space Shuttle's Solid Rocket Booster (SRB) O-rings operate. Following the O-ring features, the video news file will replay 3-D visualizations created with radar data collected by NASA's airborne topographic synthetic aperture radar (TOPSAR) as gathered over the San Francisco Bay area and Pasadena, CA. Following an interview on TOPSAR, NTV will air animation and interviews on the Ulysses spacecraft reaching the highest northern latitude in its investigation of the Sun. Satellite images of the Jug Bay Wetlands Sanctuary, MD, will be replayed, followed by interviews on NASA's involvement in the Wetlands monitoring. *NASA Television video news files air at noon, 3, 6, and 9 p.m. EDT.*

ITEM #1: O-RING HEAT UP **TRT: 1:22**
ITEM #2: INTERVIEW WITH BRYAN O'CONNOR **TRT: 1:10**
O'Connor, Director of NASA's Space Shuttle Program, discusses the recent O-ring anomalies.
ITEM #3: INTERVIEW WITH KEITH HENSON **TRT: :50**
Henson explains the difference between the current O-ring situation and the Challenger accident.

ITEM #4: REPEAT: 3-D IMAGERY OF SAN FRANCISCO AREA **TRT: 1:45**
ITEM #5: REPEAT: 3-D IMAGERY OF PASADENA, CA AREA **TRT: 1:45**
ITEM #6: REPEAT: INTERVIEW WITH DR. ZEBKER ON TOPSAR **TRT: 2:00**
ITEM #7: REPEAT: ULYSSES CROSSES THE NORTH POLE **TRT: 1:10**
ITEM #8: REPEAT: INTERVIEW WITH DR. EDWARD SMITH **TRT: 2:00**
ITEM #9: REPEAT: SATELLITE IMAGES OF JUG BAY **TRT: 1:00**
ITEM #10: REPEAT: JUG BAY WETLANDS SANCTUARY **TRT: 2:00**
ITEM #11: REPEAT: INTERVIEW WITH ANDREW ROGERS **TRT: 2:00**
ITEM #12: REPEAT: INTERVIEW WITH CHRIS SWARTH **TRT: 2:00**

EDITORS NOTE: Friday evening NASA Shuttle Program officials will hold a **press briefing** originating from the Johnson Space Center, Houston, **to discuss the O-ring anomalies** discovered on the SRBs after the two most recent Shuttle flights. The briefing will follow a meeting being held by senior Shuttle managers and a special team formed to look into the O-ring concerns. The meeting, which begins at 3 p.m. EDT, is expected to last for several hours. NASA plans to brief reporters as soon as possible after the meeting concludes. Two-way question and answer capability will be provided for media attending the briefing at the Kennedy Space Center, FL, the Marshall Space Flight Center, Huntsville, AL, and NASA Headquarters, Washington, DC.

NASA Television is broadcast on Spacenet 2, transponder 5, channel 9, C-Band, located at 69 degrees West longitude, with horizontal polarization. Frequency will be on 3880.0 megahertz, with audio on 6.8 megahertz.

-end-

News Release

National Aeronautics and
Space Administration

Washington, DC 20546
(202) 358-1600

For Release

Don Savage
Headquarters, Washington, DC
(Phone: 202/358-1547)

July 27, 1995

Diane Ainsworth
Jet Propulsion Laboratory, Pasadena, CA
(Phone: 818/354-5011)

RELEASE: 95-125

ULYSSES CLIMBS TO HIGHEST LATITUDE OVER SUN'S NORTHERN POLE

The European Space Agency's (ESA) Ulysses spacecraft, the first probe ever to fly over the poles of the Sun, will climb to its maximum latitude of 80.2 degrees north of the Sun's equator on Monday, July 31, and survey the solar forces at work from this unique vantage point in space.

The spacecraft will have traveled about 1.86 billion miles when it reaches the summit of its trajectory over the Sun at 11 a.m. EDT, according to mission operations team members at NASA's Jet Propulsion Laboratory, Pasadena, CA.

All Ulysses operations and science experiments continue to go well in this unique, five-year journey out of the ecliptic plane. NASA's tracking facilities near Madrid, Spain and at Goldstone, CA, are monitoring the spacecraft 24 hours a day as maneuvers are performed to keep Ulysses' radio antenna pointed to Earth.

Launched on October 6, 1990, aboard the Space Shuttle Discovery, the 810-pound ESA probe was designed to study the heliosphere -- that region of space dominated by the solar wind -- at all latitudes above and below the Sun's equatorial plane. These high latitude regions have never been explored before.

Named for the legendary Greek adventurer who journeyed to the hidden side of the Sun, Ulysses carries nine scientific instruments provided by European countries and the United States to make detailed studies of solar wind, magnetic fields and particles, interplanetary dust and gas, and cosmic rays entering the solar system from the Milky Way galaxy. In addition, Ulysses' radio data have been used for other experiments to study the Sun's outer atmosphere, or corona, and to search for gravitational waves in interplanetary space, and the gamma ray burst detector helps triangulate the brightest cosmic gamma ray bursts.

-more-

Today the spacecraft is traveling at about 55,300 miles per hour with respect to the Sun. Ulysses will begin to descend in latitude as it loops over the northern solar polar region.

On September 29, the spacecraft will complete the northern polar pass and begin to journey back out to the orbit of Jupiter, reaching Jupiter's distance of 5.4 astronomical units (about 500 million miles) on April 17, 1998. Ulysses will then head back on its high latitude trajectory toward the Sun, returning again to its vicinity in September 2000.

Ulysses is managed jointly by NASA and ESA to study the regions above the Sun's poles. The Jet Propulsion Laboratory manages the U.S. portion of the mission for NASA's Office of Space Science, Washington, DC.

- end -

NASA press releases and other information are available automatically by sending an Internet electronic mail message to domo@hq.nasa.gov. In the body of the message (not the subject line) users should type the words "subscribe press-release" (no quotes). The system will reply with a confirmation via E-mail of each subscription. A second automatic message will include additional information on the service. Questions should be directed to (202) 358-4043.

News Release

National Aeronautics and
Space Administration

Washington, DC 20546
(202) 358-1600

For Release

July 27, 1995

Brian Dunbar
Headquarters, Washington, DC
(Phone: 202/358-1547)

Jim Sahli
Goddard Space Flight Center, Greenbelt, MD
(Phone: 301/286-0697)

RELEASE: 95-126

JOSEPH H. ROTHENBERG NAMED DIRECTOR OF GODDARD

Joseph H. Rothenberg will become the Director of NASA's Goddard Space Flight Center, Greenbelt, MD, effective immediately, NASA Administrator Daniel S. Goldin announced today. Rothenberg has been the center's Deputy Director since rejoining NASA from industry in April of this year.

In making the announcement, Goldin said, "Since returning to NASA, Joe Rothenberg has proven himself to be one of our most capable managers. I am very proud that he will be leading Goddard, our center of excellence for space and Earth sciences."

Rothenberg rejoined NASA from Computer Technology Associates, Inc., Space Systems Division, McLean, VA, where he was executive vice president. From 1990 to 1994, he was associate director of flight projects for the Hubble Space Telescope (HST) at Goddard. In this position, he directed the development and execution of the successful first servicing mission of the HST.

The new director began his career with Grumman Aerospace in 1964, ultimately serving as staff project engineer to the director of engineering for test and operations and as project manager for Goddard's Solar Maximum Mission.

In 1983, Rothenberg joined Goddard as operations manager for the HST. In that position he led the NASA team responsible for developing and conducting orbital operations of the HST.

In April 1987, he was appointed chief of Goddard's Mission Operations Division. In September 1989 he was appointed deputy director of Mission Operations and Data Systems, followed by his appointment in 1990 as associate director for flight projects for the HST.

- more -

Rothenberg holds a bachelor of science degree in engineering science and a master of science degree in engineering management from C.W. Post College of the Long Island University. He is a member of the American Institute of Aeronautics and Astronautics (AIAA) and past president of the Long Island Section of the Instrument Society of America. He was the recipient of the Presidential Rank Award in 1995, NASA's Distinguished Service Medal in 1994, Senior Executive Service Meritorious Executive Award in 1994, the AIAA's Goddard Astronautics Award and the National Space Club Goddard Memorial Award in 1994, the Collier Trophy in 1993, and NASA's Exceptional Service Medal in 1990.

-end-

NASA press releases and other information are available automatically by sending an Internet electronic mail message to domo@hq.nasa.gov. In the body of the message (not the subject line) users should type the words "subscribe press-release" (no quotes). The system will reply with a confirmation via E-mail of each subscription. A second automatic message will include additional information on the service. Questions should be directed to (202) 358-4043.

News Release

National Aeronautics and
Space Administration
Washington, DC 20546
(202) 358-1600

For Release

July 28, 1995

Don Savage
Headquarters, Washington, DC
(Phone: 202/358-1547)

Tammy Jones
Goddard Space Flight Center, Greenbelt, MD
(Phone: 301/286-5566)

Ray Villard
Space Telescope Science Institute, Baltimore, MD
(Phone: 410/338-4514)

RELEASE: 95-127

HUBBLE DISCOVERS NEW MOONS ORBITING SATURN

Astronomers using NASA's Hubble Space Telescope have announced the discovery of at least two, and possibly as many as four, new moons orbiting the giant planet Saturn. Their discovery is based upon images taken on May 22, 1995, when Saturn's rings were tilted edge-on to Earth.

Amanda S. Bosh, of Lowell Observatory, Flagstaff AZ, and Andrew S. Rivkin, also of Lowell Observatory, and the University of Arizona/Lunar and Planetary Laboratory, reported the discovery in the July 27 International Astronomical Union telegram (Circular No. 6192).

"We were excited to see new satellites in the Hubble pictures. This was not a primary goal of our observations, so we were quite surprised," said Bosh.

Two of the satellites seen by Hubble are in orbits similar to those of a pair of moons, called Atlas and Prometheus, discovered in 1980 by the Voyager 1 and 2 spacecraft. "If these two satellites are the same seen by Voyager, then their orbital longitudes are different from what we expected," said Bosh.

Additional Hubble observation of Saturn, taken when the Earth again crosses the ring plane on Aug. 10, will provide more images that will be used to determine whether two of the four satellites detected by Hubble are truly new or not. If all four satellites are new, then the total number of known moons orbiting Saturn will grow from 18 to 22.

- more -

Two of the new moons (called S/1995 S1 and S2) lie inside Saturn's thin, eccentric "F" ring; a third moon (S3) lies just outside the F ring; and the fourth moon (S4) is 3,700 miles beyond the F ring. The moons are no bigger than about 45 miles across.

Hubble's sharp view is ideal for detecting faint new satellites that have previously gone unseen. The astronomers identified the new moons by first processing the Hubble pictures to remove a residual light from the ring edge, and noting the locations of Saturn's known satellites. After this was done, the researchers saw four objects moving from frame to frame that did not correspond with any of the known satellites.

"With the exception of S4, which we're having trouble finding in a few frames, we can follow the other three satellites for 10 hours as they go around the planet," said Bosh.

Saturn ring plane crossings happen only once every 15 years and historically have given astronomers an opportunity to discover new satellites that are normally lost in the glare of the planet's bright ring system. Astronomers discovered 13 of Saturn's moons during ring-plane crossings from 1655 to 1980. Other satellites were identified during the Voyager spacecraft flybys of Saturn in the early 1980s.

After the upcoming Aug. 10 ring plane crossing, the next such event that will be visible from Earth will be in the year 2038. Saturn will be edge-on in 2009 and 2025, but will be too close to the Sun, as seen from Earth, to be observed.

The Space Telescope Science Institute is operated by the Association of Universities for Research in Astronomy, Inc. for NASA, under contract with the Goddard Space Flight Center, Greenbelt, MD. The Hubble Space Telescope is a project of international cooperation between NASA and the European Space Agency.

- end -

EDITOR'S NOTE: An image accompanying this release is available by calling the Space Telescope Science Institute at 410/338-4562. Also, the image is available electronically on the internet at the following address:

ftp: ra.stsci.edu /pub/levay
WWW: ftp://ra.stsci.edu/pub/levay

The GIF file is S1995S3.gif and also a JPEG S1995S3.jpg (faster transmission). The image is gray only, so a TIFF is not needed.

NASA press releases and other information are available automatically by sending an Internet electronic mail message to domo@hq.nasa.gov. In the body of the message (not the subject line) users should type the words "subscribe press-release" (no quotes). The system will reply with a confirmation via E-mail of each subscription. A second automatic message will include additional information on the service. Questions should be directed to (202) 358-4043.

News Release

National Aeronautics and
Space Administration

Washington, DC 20546
(202) 358-1600

Don Nolan
Headquarters, Washington, DC
(Phone: 202/358-1983)

For Release
July 28, 1995
EMBARGOED UNTIL JULY 29, 1995

Mark Chambers
Langley Research Center, Hampton, VA
(Phone: 804/864-3728)

Keith Henry
Langley Research Center, Hampton, VA
(Phone: 804/864-6124)
(414/235-5424 or 5438 at Oshkosh, July 27-Aug. 1)

RELEASE: 95-128

NASA FORMS PARTNERSHIP TO REVITALIZE GENERAL AVIATION

Two years of government-industry cooperation have resulted in the formation of a unique partnership to revitalize the U.S. general aviation industry.

The Advanced General Aviation Transport Experiments (AGATE) consortium was formally established in a signing ceremony today at Oshkosh, WI. Participating were NASA, the FAA and industry consortium members. Universities and non-profit organizations also make up AGATE, one of the larger member consortia of any kind in the United States.

The purpose of AGATE is to enable market growth for inter-city transportation in small aircraft. AGATE members share resources and risks to make the market "pie" bigger for everyone. Members are committed to developing safer aircraft and more efficient flight systems to improve pilot training and operations in and near congested airports.

This joint government-industry effort is the outgrowth of a meeting between NASA administrator Daniel S. Goldin and several industry members at the Experimental Aircraft Association Convention in Oshkosh, WI, in 1992, spurred in large part by the Clinton Administration and Congress' commitment to "reinventing government." The consortium operates under a unique Space Act process called the Joint Sponsored Research Agreement (JSRA). Research conducted under a JSRA eliminates many of the burdensome and time-consuming operations of federal acquisition regulations. Early AGATE results have been impressive in this regard.

-more-

The consortium represents a new 'blueprint' to map out this revitalization, according to Dr. Bruce A. Holmes, AGATE's first director and head of the General Aviation Office at NASA's Langley Research Center, Hampton, VA. Of AGATE, Holmes said, "It offers industry the ability to work together to undertake tasks of higher risk, with higher payoff, faster speed of technology transfer, control of proprietary and shared technologies, reduced costs and more efficient use of research & development resources."

The agreement is a product of several years of investigation and development by the American Technology Initiative, Inc. (AmTech) of Menlo Park, CA, a NASA-sponsored, public-benefit, non-profit corporation that facilitates public-private research and development collaboration.

Of the more than 60 consortium members, 31 are companies having total annual revenues of more than $25 billion and 250,000 employees. Consortium members' general aviation output generates $5 billion per year and employs 53,000 people. One purpose of AGATE is to increase revenue and create new jobs in manufacturing, sales, training, service, support and operations industries throughout the nation's small airport infrastructure.

General Aviation—defined as all flying except the military services and commercial airlines—has fallen from its economic heights in the late 1970's to record lows due to outdated technologies, regulatory restrictions, increasing costs and liability burdens.

The AGATE program targets technologies for new operating capabilities in small aircraft including improved bad weather flight systems; emergency avoidance systems that support decision-making; night and low visibility terrain-following systems; traffic avoidance systems; and systems that ease the flight-planning workload, minimize the danger of injuries, and improve comfort, performance and efficiency.

NASA's Small Business Innovation Research (SBIR) Program provides substantial support for the general aviation industry. More than $8 million in contracts have been awarded in 1993 and 1994 to small general aviation companies. Most of these companies have chosen to join the AGATE consortium to leverage their SBIR efforts with other companies.

-end-

NASA press releases and other information are available automatically by sending an Internet electronic mail message to domo@hq.nasa.gov. In the body of the message (not the subject line) users should type the words "subscribe press-release" (no quotes). The system will reply with a confirmation via E-mail of each subscription. A second automatic message will include additional information on the service. Questions should be directed to (202) 358-4043.

News Release

National Aeronautics and
Space Administration

Washington, DC 20546
(202) 358-1600

Don Nolan
Headquarters, Washington, DC
(Phone: 202/358-1983)

For Release
July 28, 1995
EMBARGOED UNTIL JULY 29, 1995

Jeff Thal
FAA Headquarters, Washington, DC
(Phone: 202/267-7344)

Keith Henry
Langley Research Center, Hampton, VA
(Phone: 804/864-6124)

Mary Sandy
Virginia Space Grant Consortium, Hampton, VA
(Phone: 804/865-0726)

RELEASE: 95-129

NASA/FAA ANNOUNCE AVIATION DESIGN COMPETITION WINNERS

NASA and the FAA have selected a team from three Kansas universities as joint winners of their first National General Aviation Design Competition for U.S. aeronautical and engineering universities. The joint team was composed of students and faculty from the University of Kansas, Lawrence; Kansas State University, Manhattan; and Wichita State University, Wichita.

The contest challenged teams of undergraduate and/or graduate students, working with faculty advisors, to address design challenges for general aviation aircraft and related transportation systems. The competition was held during the 1994-95 academic year.

For taking first place, the participating academic departments of the joint Kansas team shared a $5,000 award and the student design team members shared a $3,000 award. Their "Shrike" aircraft concept was conceived to introduce advanced operator-friendly technologies that promise to make general aviation flying easier than driving a car. The new series of aircraft would feature advanced flight control systems and a heavily automated, simplified cockpit display and pilot interface system.

Second place and a $2,000 award went to the design team from Embry-Riddle Aeronautical University, Daytona Beach, FL. Their Aquilas design concept suggested several innovative features to enhance safety and efficiency of general aviation aircraft. Features would include improved structural crashworthiness and a deployable parachute.

-more-

Third place and a $1,000 award went to Mississippi State University, Mississippi State, MS, for conducting a study of advanced cockpit and propulsion system concepts that would feature the latest in pilot displays and early warning emergency systems. These systems were designed to replace the older, less efficient systems commonly found in general aviation aircraft today.

An honorable mention went to the UPM Design Group, made up of members from the University of Virginia at Charlottesville, VA, the Pratt Institute at Brooklyn, NY, and the Mallen Research Corporation of Charlottesville, VA. The team was honored for its futuristic state-of-the-art aircraft design, which includes an "ergonomically" designed cabin interior providing passengers with access to the latest in onboard computer communication systems.

The design competition was created because NASA and the FAA want to increase the involvement of the academic community in the revitalization of the U.S. general aviation industry while providing real-world design and development opportunities for students.

The competition is now an annual event. It allows university students to participate in a national effort to develop technologies for an aircraft transportation system for smaller aircraft. It is intended to help raise student awareness of the economic relevance of general aviation and its value for business and personal use.

Design packages are reviewed by a panel of industry and government experts who provide feedback to the student teams.

Design packages for the 1995/96 NASA/FAA General Aviation Design Competition are due by May 6, 1996. Winners will be presented with their awards at the annual Experimental Aircraft Association Fly-In Convention and Sport Aviation Exhibition in Oshkosh, WI.

The competition is being coordinated by the Virginia Space Grant Consortium, a nonprofit aerospace educational coalition, in Hampton, VA. Copies of competition guidelines can be obtained from the Consortium by phone at 804/865-0726 or fax at 804/865-7965.

-end-

NASA press releases and other information are available automatically by sending an Internet electronic mail message to domo@hq.nasa.gov. In the body of the message (not the subject line) users should type the words "subscribe press-release" (no quotes). The system will reply with a confirmation via E-mail of each subscription. A second automatic message will include additional information on the service. Questions should be directed to (202) 358-4043.

News Release

National Aeronautics and
Space Administration

Washington, DC 20546
(202) 358-1600

Ed Campion
Headquarters, Washington, DC
(Phone: 202/358-1778)

For Release
July 28, 1995

June Malone
Marshall Space Flight Center, Huntsville, AL
(Phone: 205/544-0034)

RELEASE: 95-130

NASA MANAGERS DEFER NEXT LAUNCH OF SPACE SHUTTLE

Following a briefing by a special assessment team, NASA managers have decided to postpone the August 5th launch of Space Shuttle Endeavour on Mission STS-69 in order to finish a review of flight hardware associated with O-rings in a nozzle joint of the Reusable Solid Rocket Motor (RSRM). Launch of Endeavour is now targeted for no earlier than mid-August.

The inspection team was formed to address an issue which came out of a post-flight assessment of boosters used for the last two Shuttle launches. During their inspections, engineers found that a gas path in the RSRM nozzle internal joint number 3 had extended from insulation in the motor chamber to, but not past, the primary O-ring. While gas paths to the primary O-ring have been observed in previous nozzles, the last two flights saw the gas path result in a slight heat effect to the primary O-ring seal.

After reviewing several different aspects of the RSRM system, the team has concluded that there are no concerns with the design of the nozzle joint. While there are no design issues, the team is looking at a procedure which would allow inspection and minor adjustments to the application of a thermal barrier, referred to as RTV, or Room Temperature Vulcanizing, which may further reduce the possibility of a gas path reaching the primary O-ring.

"This review has been a first-rate effort from the entire space flight team" said Brewster Shaw, Director, Space Shuttle Operations at Johnson Space Center. "We've had good representation and coordination between the various NASA organizations and Thiokol and this issue is being thoroughly reviewed. While the hardware at the launch pad would probably operate just as expected during launch, we are going to take the time to ensure the Shuttle is in the absolute best condition for flight. Safety has been, is, and will remain our top priority with this program."

Shuttle managers expect to receive another briefing by the RSRM assessment team at the end of next week. They plan to wait until the assessment team has concluded its efforts before determining a new launch date for Endeavour.

-end-

Video Advisory

National Aeronautics and
Space Administration
Washington, DC 20546
(202) 358-1600

David E. Steitz
Headquarters, Washington, DC
(Phone: 202/358-1730)

For Release
July 30, 1995

VIDEO ADVISORY: V95-113

SHUTTLE O-RING PRESS BRIEFING EXCERPTS ON NTV MONDAY

Monday's NASA TV video news file will show footage of the Space Shuttle Endeavour on the launch pad at the Kennedy Space Center, FL, and a replay of excerpts from Friday evening's Space Shuttle Program media briefing that addressed recent O-ring anomalies found on the Shuttle Solid Rocket Boosters. The news file will air a feature on teachers from around the country participating in workshops at NASA field centers. A replay of 3-D visualizations created with radar data collected by NASA's airborne topographic synthetic aperture radar (TOPSAR) as gathered over the San Francisco Bay area and Pasadena, CA will close the day's news file. *NASA Television video news files air at noon, 3, 6, and 9 p.m. EDT.*

ITEM #1: STS-69, SPACE SHUTTLE ENDEAVOUR AT LAUNCH PAD TRT: :30
Space Shuttle Endeavour on the pad at the Kennedy Space Center, FL.

ITEM #2: PRESS BRIEFING HIGHLIGHTS TRT: tbd
Excerpts from Friday evening's press briefing on the Space Shuttle Program and recent O-ring anomalies.

ITEM #3: O-RING HEAT UP TRT: 1:22
During the post-flight assessment of the past two Shuttle missions, engineers observed a gas path in the left hand nozzle internal joint number 3, extending from the motor chamber to, but not past, the primary O-ring. There was a slight heat effect to the primary O-ring.

ITEM #4: NASA TEACHER TRAINING PROGRAM TRT: tbd
Each year NASA invites hundreds of elementary, junior high and high school teachers to participate in a two-week "hands on" training program to learn applied mathematics, physics and technology from NASA scientists and engineers. Footage shows teachers involved in the workshop at Kennedy Space Center, FL.

ITEM #5: REPEAT: 3-D IMAGERY OF SAN FRANCISCO AREA TRT: 1:45
ITEM #6: REPEAT: 3-D IMAGERY OF PASADENA, CA AREA TRT: 1:45
ITEM #7: REPEAT: INTERVIEW WITH DR. ZEBKER ON TOPSAR TRT: 2:00

NASA Television is broadcast on Spacenet 2, transponder 5, channel 9, C-Band, located at 69 degrees West longitude, with horizontal polarization. Frequency will be on 3880.0 megahertz, with audio on 6.8 megahertz.

-end-

Video Advisory

National Aeronautics and
Space Administration

Washington, DC 20546
(202) 358-1600

For Release

July 31, 1995

David E. Steitz
Headquarters, Washington, DC
(Phone: 202/358-1730)

VIDEO ADVISORY: V95-114

NEW MOON OF SATURN ON NASA TV TUESDAY

Tuesday's NASA TV video news file will show still images of one of four new moons orbiting Saturn, as detected by the Hubble Space Telescope. The moon appears as an elongated white spot near the center of each image. The new moon lies just outside Saturn's "F" ring and is only about 15 miles in diameter.

NASA Television video news files air at noon, 3, 6, and 9 p.m. EDT.

ITEM #1: NEW MOON ORBITING SATURN **TRT: :30**

A four picture sequence shows one of the four new moons discovered by the Hubble Space Telescope as it observed Saturn on May 22.

NASA Television is broadcast on Spacenet 2, transponder 5, channel 9, C-Band, located at 69 degrees West longitude, with horizontal polarization. Frequency will be on 3880.0 megahertz, with audio on 6.8 megahertz.

-end-

News Release

National Aeronautics and
Space Administration

Washington, DC 20546
(202) 358-1600

For Release

Terri Hudkins
Headquarters, Washington, DC
(Phone: 202/358-1977)

July 31, 1995

RELEASE: 95-131

MORE THAN 2,000 TEACHERS EXPERIENCE SCIENCE AT NASA

Over the last 12 years, NASA has opened its doors to more than 2,000 teachers from around the country for an innovative, two-week "hands-on" training program to learn applied mathematics, physics and technology from NASA scientists and engineers.

"Our goal is to help teachers improve their knowledge and skills in math, science and technology by interacting with scientists and engineers in NASA's unique facilities and labs," said Frank Owens, Director of NASA's Education Division.

Each year between June and August, 115 elementary school teachers (grades K-6) and 100 math, science and technology teachers (grades 7-12) are selected for an intensive two-week, all expense-paid workshop at nine NASA field centers, based on their demonstrated interest, background and experience in science, their response to a series of essay questions and the letters of support from their school administrators and colleagues. Participants earn three hours of graduate credit from Oklahoma State University for completing the workshop. This year's participants represent 49 of the 50 states, and Department of Defense Schools in American Samoa, Turkey and Japan.

The workshops -- NASA Educational Workshops for Elementary School Teachers (NEWEST) and NASA Educational Workshops for Math, Science and Technology Teachers (NEWMAST) -- are sponsored by NASA in cooperation with the National Science Teachers Association, National Council of Teachers of Mathematics and the International Technology Education Association.

For additional information about NEWEST and NEWMAST workshops and to obtain the 1995-96 program announcement and application, teachers can write the National Science Teachers Association, Space, Science and Technology Programs, 1840 Wilson Boulevard, Arlington, VA 22201.

- end -

NASA press releases and other information are available automatically by sending an Internet electronic mail message to domo@hq.nasa.gov. In the body of the message (not the subject line) users should type the words "subscribe press-release" (no quotes). The system will reply with a confirmation via E-mail of each subscription. A second automatic message will include additional information on the service. Questions should be directed to (202) 358-4043.

Internet Advisory

National Aeronautics and
Space Administration

Washington, DC 20546
(202) 358-1600

For Release

August 2, 1995

Brian Welch
Headquarters, Washington, DC
(Phone: 202/358-1600)

INTERNET ADVISORY: I95-9

IMAX IMAGES OF SHUTTLE-MIR DOCKING AVAILABLE VIA INTERNET

Several dramatic new images highlighting the historic docking of the Space Shuttle Atlantis and the Mir space station are available via the Internet. The high resolution images show crew activities and views of Atlantis taken from Mir. The images were recorded using the 70-mm IMAX camera system.

The IMAX images are part of a larger photo gallery that includes images from the STS-71 docking mission and from STS-63, a mission flown earlier this year in which the Shuttle Discovery performed a rendezvous with the Mir that served as a dress rehearsal for the docking mission. Links to the collection can be found on the "**Today at NASA Home Page**" at URL:

http://www.hq.nasa.gov/office/pao/NewsRoom/today.html

-end-

News media can request the images in color transparency or black and white print format by faxing a request on their letterhead to the Headquarters photo office at 202/358-4333. Photo numbers for the images are:

Atlantis from Mir (95-HC-396, color trans; 95-H-406, BW print)
Mir after separation (95-HC-401, color trans; 95-H-411, BW print)

News Release

National Aeronautics and
Space Administration

Washington, DC 20546
(202) 358-1600

For Release

August 2, 1995

Ed Campion
Headquarters, Washington, DC
(Phone: 202/358-1780)

Dwayne Brown
Headquarters, Washington, DC
(Phone: 202/358-1600)

Rob Navias
Johnson Space Center, Houston
(Phone: 713/483-5111)

NOTE TO EDITORS: N95-52

NASA BRIEFING TO UPDATE SHUTTLE BOOSTER STATUS FRIDAY

NASA will hold a briefing Friday, August 4, to update reporters on the status of an investigation into erosion seen on Space Shuttle solid rocket booster nozzle O-rings during the last two flights. Mission mangers last week deferred launch of Space Shuttle Endeavour on mission STS-69, originally planned for August 5, to no earlier than mid-August so that the O-ring issue can be thoroughly examined.

The briefing to news media will follow a second meeting by senior Shuttle managers with a special team formed to look into the O-ring concerns. The meeting, which begins at 3 p.m. EDT, is expected to last at least one hour. NASA plans to brief reporters as soon as possible after the meeting concludes.

The briefing, with Director, Space Shuttle Operations Brewster Shaw and Manager, Space Shuttle Program Integration Office Ron Dittemore, will originate from the Johnson Space Center (JSC), Houston. NASA Newsrooms at Headquarters, Washington, DC, Kennedy Space Center, FL, Marshall Space Flight Center, Huntsville, AL, and JSC, will be open to support the briefing. Reporters can call those newsrooms for a status on the time of the briefing, or watch NASA Television for updated information on the briefing status.

Two-way question and answer capability will be available to support the briefing from each of the four NASA locations. NASA Television is carried on Spacenet 2, transponder 5, Channel 9, C-Band, located at 69 degrees West longitude, with horizontal polarization. Frequency is 3880 MHz with audio on 6.8 MHz.

-end-

Video Advisory

National Aeronautics and
Space Administration

Washington, DC 20546
(202) 358-1600

For Release

August 2, 1995

David E. Steitz
Headquarters, Washington, DC
(Phone: 202/358-1730)

VIDEO ADVISORY: V95-116

IMAX SHUTTLE-MIR DOCKING FOOTAGE ON NTV THURSDAY

Thursday's NASA TV video news file will replay new IMAX film of the recent Shuttle-Mir docking mission, as well as IMAX footage from a previous Shuttle-Mir Rendezvous mission. The footage was first shown on Wednesday at the National Air and Space Museum in Washington, DC. The first feature on Thursday's news file will be excerpts from a press briefing at the museum in which the crews of STS-71 and Mir 18 will participate. Following the IMAX feed, the news file will feature footage and an interview on the Optical Transient Detector, a NASA satellite that provides scientists with clues on the role of lightning in the formation of severe weather. *NASA Television video news files air at noon, 3, 6, and 9 p.m. EDT.*

ITEM #1: EXCERPTS: IMAX BRIEFING AT AIR & SPACE MUSEUM TRT: 10:00
Highlights from a morning press briefing in which the STS-71 and Mir 18 crew members discuss their historic mission and the IMAX footage being shown at the National Air and Space Museum.

ITEM #2: STS-71 IMAX FOOTAGE TRT: 5:00
Footage from the IMAX in-cabin showing Orbiter approach to the Mir space station, crew activities, the Shuttle Atlantis from Mir, and the Mir space station.

ITEM #3: STS-63 IMAX FOOTAGE TRT: 2:08
Footage from the STS-63 Shuttle-Mir rendezvous mission.

ITEM #4: STS-71 CREW TRAINING WITH IMAX CAMERAS TRT: 1:02
STS-71 Commander Hoot Gibson and Mission Specialist Ellen Baker are instructed on how to use the IMAX camera to capture the large format documentary film of key events during the docking of the Space Shuttle with the Mir space station.

ITEM #5: STS-71 MISSION HIGHLIGHTS TRT: 5:00

ITEM #6: "DESTINY IN SPACE" EXCERPTS TRT: 1:00
Excerpts from the electronic press kit for the IMAX film.

ITEM #7: OPTICAL TRANSIENT DETECTOR TRT: 2:00
Footage of the launch, data collection and ground-based lightning detection examine the global effects of lightning on severe weather.

ITEM #8: INTERVIEW WITH DR. HUGH CHRISTIAN TRT: :40
Christian explains the process behind the Optical Transient Detector.

NASA Television is broadcast on Spacenet 2, transponder 5, channel 9, C-Band, located at 69 degrees West longitude, with horizontal polarization. Frequency will be on 3880.0 megahertz, with audio on 6.8 megahertz.

-end-

News Release

National Aeronautics and
Space Administration

Washington, DC 20546
(202) 358-1600

For Release

August 4, 1995

Laurie Boeder
Headquarters, Washington, DC
(Phone: 202/358-1898)

Jeff Carr
Johnson Space Center, Houston, TX
(Phone: 713/483-3671)

RELEASE: 95-132

HUNTOON TO LEAD PLANNING EFFORT FOR LIFE SCIENCES INSTITUTE

NASA Administrator Daniel S. Goldin announced today that, effective immediately, Johnson Space Center Director Carolyn Huntoon has taken on a special assignment for the Administrator to lead the development of plans for a new science institute for biomedical research.

As a key part of her assignment, Dr. Huntoon will represent the Agency in establishing a dialogue with potential national and international participants in the life science institute. She will represent the Administrator in these efforts. Deputy Center Director George Abbey will serve as Acting Center Director.

NASA officials previously announced plans to create science institutes to help streamline the Agency's management structure and improve the quality of its scientific research. As envisioned by NASA, the institutes would be privatized arrangements in which government-owned assets are managed by an external entity, such as a university, an industrial organization, or a consortium.

"Outside involvement and participation are key to the success of the institute approach," Goldin said. "Dr. Huntoon, as an internationally-recognized scientist, is the perfect choice to ensure that we achieve the necessary support and participation. The biomedical institute is the centerpiece of NASA's strategy to foster world-class life sciences research in support of human space exploration. The institute will provide us with the tools we need to understand how men and women can live and work in space, and in doing so, will provide the answers to medical problems here on Earth."

A pioneer in life sciences research for NASA, Dr. Huntoon has directed numerous important efforts in support of the Agency's human space flight program. She joined NASA in 1970 as a life sciences researcher, and served in a variety of key positions before being named the Agency's first woman Center Director in January 1994.

-more-

"I am looking forward to the challenge of helping bring broad participation to the life sciences institute," Dr. Huntoon said. "Establishment of the institute is clearly one of Mr. Goldin's highest priorities and he is committed to ensuring that resources are made available to ensure its success."

The life sciences institute has been designated by Goldin as the Agency's "pathfinder" effort to expand its scientific efforts through new ways of doing business. NASA envisions establishing other institutes affiliated with NASA centers and programs across the country, and linked to the Agency's core missions of human space flight, robotics space exploration, space and Earth science, and technology. Broad participation is a goal for all the institutes, and Dr. Huntoon's efforts will establish a model for later institute efforts.

Dr. Huntoon will work with Deputy Associate Administrator Alphonse Diaz, who is coordinating the Agency's overall plans for establishing the science institutes, including efforts to consult with the Administration and Congress and to secure appropriate authority.

-end-

NASA press releases and other information are available automatically by sending an Internet electronic mail message to domo@hq.nasa.gov. In the body of the message (not the subject line) users should type the words "subscribe press-release" (no quotes). The system will reply with a confirmation via E-mail of each subscription. A second automatic message will include additional information on the service. Questions should be directed to (202) 358-4043.

News Release

National Aeronautics and
Space Administration

Washington, DC 20546
(202) 358-1600

For Release

August 7, 1995

Don Savage
Headquarters, Washington, DC
(Phone: 202/358-1547)

Tammy Jones
Goddard Space Flight Center, Greenbelt, MD
(Phone: 301/286-5566)

Ray Villard
Space Telescope Science Institute, Baltimore, MD
(Phone: 410/338-4514)

RELEASE: 95-133

HUBBLE FINDS SURPRISINGLY COMPLEX STRUCTURES IN RADIO GALAXIES

Probing some of the most distant and energetic galaxies in the universe, NASA's Hubble Space Telescope has uncovered surprisingly varied and intricate structures of stars and gas that suggest the processes powering these so-called radio galaxies are more complex than previously thought.

The Hubble observations, made by a team of astronomers at Cambridge University, England, should shed light on the nature of active galaxies that might be powered by immense black holes at their cores, and more generally, on galactic evolution. The radio galaxies observed are so far away they existed when the universe was half its present age, and the light is only now reaching us.

The bizarre, never-before-seen details may be a combination of light from massive star forming regions, small satellite dwarf galaxies, and bow shocks caused by jets of hot gas blasted out of the galaxy's core by a suspected black hole.

The observations were made by Professor Malcolm Longair and Philip Best of the Cavendish Laboratory, Cambridge University, and Huub Rottgering of Leiden Observatory, The Netherlands, who have published images of three radio galaxies (3C368, 3C324 and 3C265) in the August 1 issue of the Monthly Notices of the Royal Astronomical Society.

The team is analyzing a sample of 28 radio galaxies that have been imaged by Hubble in visible light, by the Very Large Array Radio Interferometer (an array of 27 separate radio antennas) at radio wavelengths, and by the UK Infrared Telescope.

-more-

A radio galaxy emits powerful radio waves along two opposite directions pointing out from the galaxy's core. The radio lobes usually extend far beyond the host galaxy. The suspected powerhouse behind the radio emission is a one-billion solar mass black hole in a galaxy's core. Gaseous jets, traveling at nearly the speed of light, blast out along the rotation axis of the spinning black hole. These jets bore through space like a narrow stream of water from a garden hose nozzle plowing through sand. When they are finally stopped by the intergalactic medium, a huge amount of energy is released in the form of radio waves.

Previous ground-based observations since 1987 have shown that, in visible light, radio galaxies have an unusual elongated structure -- unlike the classic spiral and elliptical shapes in normal galaxies -- that align to the twin lobe of radio emissions that are the trademark of such active galaxies. In the Hubble views, these shapes break up into a string of bright knots that might be regions where new stars are forming, or could be glowing clouds of gas. In one galaxy, the knots align to the axis of the jet, while in another case they do not, and instead cluster around the galaxy like smaller "satellite" galaxies.

One explanation for the alignment between the invisible jets and optical structures is that the jets trigger the formation of stars along their paths. However, some of the galaxies emit highly polarized light. Since this type of light is not produced by stars, other processes must be at work. A possible explanation is that the light from the galaxy's hidden active nucleus is scattered in our direction by dust or electrons.

Longair, Best and Rottgering propose that the remarkable structures seen in the Hubble images are different manifestations of activity associated with radio galaxies. They conclude at least two mechanisms responsible for the alignment effect. They also note that the period during which there is strong radio emission is quite short relative to the total lifetime of a galaxy, so different processes may dominate as the radio source ages. They are planning further observations to determine the relative importance of the different effects.

The Space Telescope Science Institute is operated by the Association of Universities for Research in Astronomy, Inc., for NASA, under contract with the Goddard Space Flight Center, Greenbelt, MD. The Hubble Space Telescope is a project of international cooperation between NASA and the European Space Agency.

- end -

EDITORS' NOTE: An image accompanying this release is available by calling the Space Telescope Science Institute at 410/338-4562. Also, the image is available electronically on the internet at the following address:

ftp: ra.stsci.edu /pub/levay
WWW: ftp://ra.stsci.edu/pub/levay

-Image files in GIF and JPEG format may be accessed on internet via anonymous ftp from ftp.stsci.edu:

GIF: /pubinfo/gif/3Cgalax.gif
JPEG: /pubinfo/jpeg/3Cgalax.jpg

The same images are available via World Wide Web from URL http://www.stsci.edu/pubinfo/PR/95/30.html or via links in http://www.stsci.edu/pubinfo/Pictures.html.

Video Advisory

National Aeronautics and
Space Administration

Washington, DC 20546
(202) 358-1600

David E. Steitz
Headquarters, Washington, DC
(Phone: 202/358-1730)

For Release

August 8, 1995

VIDEO ADVISORY: V95-119

SPACE SHUTTLE ROLLS OUT TO PAD ON NTV WENEDSAY

On Wednesday the NASA TV video news file will show footage from Tuesday of the Space Shuttle Endeavour rolling back to the launch pad at the Kennedy Space Center, FL. Endeavour was rolled into the Vehicle Assembly Building at Kennedy due to Hurricane Erin. Endeavour is currently scheduled to launch in late August. *NASA Television video news files air at noon, 3, 6 and 9 p.m. EDT.*

ITEM #1: ENDEAVOUR ROLLS BACK TO THE LAUNCH PAD TRT: 2:58

Taped footage from Tuesday showing Endeavour rolling out to the launch pad, followed by live shots of Endeavour on the pad at the Kennedy Space Center, FL.

NASA Television is broadcast on Spacenet 2, transponder 5, channel 9, C-Band, located at 69 degrees West longitude, with horizontal polarization. Frequency will be on 3880.0 megahertz, with audio on 6.8 megahertz.

-end-

News Release

National Aeronautics and
Space Administration

Washington, DC 20546
(202) 358-1600

For Release

August 9, 1995

Ed Campion
Headquarters, Washington, DC
(Phone: 202/358-1780)

Dwayne Brown
Headquarters, Washington, DC
(Phone: 202/358-1600)

Rob Navias
Johnson Space Center, Houston
(Phone: 713/483-5111)

NOTE TO EDITORS: N95-53

NASA BRIEFING TO UPDATE SHUTTLE BOOSTER STATUS ON AUG. 11

NASA will hold a briefing Friday, Aug. 11, to update reporters on the status of an investigation into erosion seen on Space Shuttle solid rocket booster nozzle O-rings during the last two flights. Mission managers deferred launch of Space Shuttle Endeavour on mission STS-69, originally planned for Aug. 5, so that the O-ring issue can be thoroughly examined.

The briefing to news media will occur following a third meeting by senior Shuttle managers with a special team formed to look into the O-ring concerns. The meeting, which begins at 3 p.m. EDT Friday, is expected to last at least one hour. NASA plans to brief reporters as soon as possible after the meeting.

The briefing, with Brewster Shaw, Director, Space Shuttle Operations and Ron Dittemore, Manager, Space Shuttle Program Integration Office, will originate from the Johnson Space Center (JSC), Houston. NASA Newsrooms at Headquarters, Washington, DC, Kennedy Space Center, FL, Marshall Space Flight Center, Huntsville, AL, and JSC, will be open to support the briefing. Reporters should call those newsrooms for a status on the time of the briefing, or watch NASA Television for updated information on the briefing status.

Two-way question and answer capability will be available to support the briefing from each of the four NASA locations. NASA Television is carried on Spacenet 2, transponder 5, Channel 9, C-Band, located at 69 degrees West longitude, horizontal polarization. Frequency is 3880 MHz, audio on 6.8 MHz.

-end-

NASA press releases and other information are available automatically by sending an Internet electronic mail message to domo@hq.nasa.gov. In the body of the message (not the subject line) users should type the words "subscribe press-release" (no quotes). The system will reply with a confirmation via E-mail of each subscription. A second automatic message will include additional information on the service. Questions should be directed to (202) 358-4043.

Video Advisory

National Aeronautics and
Space Administration

Washington, DC 20546
(202) 358-1600

For Release

August 9, 1995

Dwayne C. Brown
Headquarters, Washington, DC
(Phone: 202/358-1725)

VIDEO ADVISORY: V95-120

SATURN RING CROSSING, LIFE SUPPORT TEST ON NTV THURSDAY

On Thursday the NASA TV video news file will air animation of the planet Saturn's different positions around Earth due to the recent observation of the giant planet's crossing of its rings and the subsequent discovery of at least two, and possibly as many as four new moons orbiting the planet. Saturn ring plane crossings happen once every 15 years and historically have given astronomers an opportunity to discover new satellites that are normally lost in the glare of the planet's bright rings. The animation will then be followed with an interview with Philip Nicholson, Team Leader of the Saturn Observation Team.

NASA TV also will air B-roll of a significant test to demonstrate the feasibility of long-duration space flight. Dr. Nigel Packham, a life support systems scientist at NASA's Johnson Space Center, lived in an enclosed chamber in which the atmosphere was continually recycled by about 30, 000 thriving dwarf wheat plants that supplied oxygen to the scientist while he in turn supplied carbon dioxide to the plants. The test, completed Tuesday, August 8, is the first in a series of human tests of advanced, recycling life support technologies planned over the next several years . Following the B-roll, Dr. Packham will discuss living in the regenerative life support chamber. *NASA Television video news files air at noon, 3, 6 and 9 p.m. EDT.*

ITEM #1: SATURN RING CROSSING ANIMATION TRT: 3:50
Animation showing different views of the planet Saturn during the recent ring crossing.

ITEM #2: INTERVIEW WITH PHILIP NICHOLSON TRT: 2:00

ITEM #3: REGENERATIVE LIFE SUPPORT TRT: 2:03
B-roll of chamber and testing activities.

ITEM #4: INTERVIEW WITH NIGEL PACKHAM TRT: 1:47

NASA Television is broadcast on Spacenet 2, transponder 5, channel 9, C-Band, located at 69 degrees West longitude, with horizontal polarization. Frequency will be on 3880.0 megahertz, with audio on 6.8 megahertz.

-end-

News Release

National Aeronautics and
Space Administration

Washington, DC 20546
(202) 358-1600

For Release

Greta Creech
Headquarters, Washington, DC
(Phone: 202/358-2343)

August 9, 1995

RELEASE: 95-134

NASA AND CONGRESSMAN KENNEDY ANNOUNCE AGREEMENT TO AID BAY WITH SPACE AGENCY TECHNOLOGY

NASA Administrator Daniel S. Goldin and Congressman Patrick J. Kennedy (D-RI) have announced an agreement that will enable local businesses to use NASA's remote sensing technologies to benefit Narragansett Bay. This program is expected to have positive impacts on the state's fishery, tourism and high technology economies.

The agreement reached by Goldin and Kennedy calls for NASA's satellite remote sensing technology to be used to provide an integrated view from space of Narragansett Bay and its changes over time.

The data provided from the program will be analyzed by Brown University and provided to local businesses to develop new products that are needed to help local industry adapt to environmental changes in the Bay. These environmental changes have significant impacts on the local fishery and tourism industries, and on the future economic development of the area.

"The NASA of the '90s doesn't just look to the stars," said Goldin. "We have our sights right here on Earth to find ways that we can use our ideas and technologies to help this country grow. I am very excited about the opportunity to work with Congressman Kennedy and Brown University as we continue to move this program forward."

The idea for the program sprang from a meeting between Goldin, Kennedy and Brown faculty in Providence on May 15, 1995. Spurred by Kennedy's interest in NASA's Mission to Planet Earth program and its remote sensing technology, Goldin challenged the Brown faculty to develop a program that would enable this technology to benefit Rhode Island industry. His goal was to create a program that would allow business, education and state policy makers to work together in addressing a local problem.

-more-

"Congressman Kennedy's office and the individuals at Brown who developed this program should be commended for their innovation in applying space technologies to Rhode Island," said Goldin. "And they should also be commended for acting so quickly. I asked that they get back to me in three to six months, and here we are, in less than three months."

The Rhode Island initiative is not the first joint endeavor to apply NASA technology to aid local economic development. Earlier this year, Goldin traveled to Scottsdale, AZ, to unveil a new project to use remote sensing technology in helping that community plan its future infrastructure development.

"We are committed at NASA to finding ways in which space-based technologies can be applied to the challenges we have here on Earth," said Goldin. "Our hope is that the work we do through this program in Rhode Island will serve as a model for other communities to use NASA technologies to address their needs."

-end-

NASA press releases and other information are available automatically by sending an Internet electronic mail message to domo@hq.nasa.gov. In the body of the message (not the subject line) users should type the words "subscribe press-release" (no quotes). The system will reply with a confirmation via E-mail of each subscription. A second automatic message will include additional information on the service. Questions should be directed to (202) 358-4043.

News Release

National Aeronautics and
Space Administration

Washington, DC 20546
(202) 358-1600

For Release
August 9, 1995

Ed Campion
Headquarters, Washington, DC
(Phone: 202/358-1780)

Rob Navias
Johnson Space Center, Houston
(Phone: 713/483-5111)

RELEASE: 95-135

SHAW TO LEAVE NASA

Brewster Shaw, Director of Space Shuttle Operations has announced he is stepping down from that post effective August 18, and will leave the agency on November 3. Tommy Holloway, currently the Director of the Phase One Program, which includes a series of Shuttle-Mir docking missions leading to the development of the international Space Station, has been named to take Shaw's place with a new title of Manager, Space Shuttle Program.

"This was an extremely difficult decision for me to make. The decision to leave as Director of Shuttle Operations was for personal reasons," Shaw said. "I feel it is best for me to leave the program now. I am heartened that Tommy Holloway has agreed to take over this position. I have the utmost respect for the personnel involved in the Space Shuttle program and am confident that the Shuttle will continue to operate as successfully and as safely as it has since return to flight."

In his new role as Manager, Space Shuttle Program, Tommy Holloway will direct the day-to-day management and execution of the Shuttle program, including detailed program planning, scheduling and Shuttle systems configuration management.

Shaw, a former astronaut who flew on three Shuttle missions, has served in senior management positions in the Shuttle program since 1989.

- end -

NASA press releases and other information are available automatically by sending an Internet electronic mail message to domo@hq.nasa.gov. In the body of the message (not the subject line) users should type the words "subscribe press-release" (no quotes). The system will reply with a confirmation via E-mail of each subscription. A second automatic message will include additional information on the service. Questions should be directed to (202) 358-4043.

Video Advisory

National Aeronautics and
Space Administration

Washington, DC 20546
(202) 358-1600

For Release

August 10, 1995

Dwayne C. Brown
Headquarters, Washington, DC
(Phone: 202/358-1726)

VIDEO ADVISORY: V95-121

SHUTTLE NOZZLE JOINTS, VISION ENHANCEMENT, SATURN RINGS ON NTV FRIDAY

On Friday NASA TV will air footage of NASA's ongoing effort to determine the best method of repairing sealant gaps in the Space Shuttle solid rocket motor nozzle joints. The tests will be followed by footage of Kennedy Space Center employees erecting scaffolding and work platforms beneath the solid rocket booster in preparation for o-ring inspection and repair activities.

NASA TV also will air footage of a head-mounted Vision Enhancement Imaging System used successfully by Jacob Webb of Wiggins, MS. The system enables Webb -- considered legally blind -- to see. Developed by NASA's Stennis Space Center, MS, and the Johns Hopkins Wilmer Eye Institute, Baltimore, MD, this system is derived from technology developed for computer processing of satellite images.

New images of Saturn's ring system will show the system seen tilted edge-on in a NASA Hubble Telescope picture taken August 10 when the planet was 895 million miles away. When viewed edge-on the rings are so dim they almost disappear because they are so thin. Following that image, a sequence of three images will show the Saturn ring crossing sequence. **(NOTE: These images will air no earlier than 3:00 and will be shown as the first item of that video feed)**

NASA Television video news files air at noon, 3, 6 and 9 p.m. EDT.

ITEM #1: NOZZLE JOINTS REPAIR **TRT: 50**
Marshall Space Flight Center engineers conducting tests for repairing sealant gaps in the Space Shuttle solid rocket motor nozzle joints

ITEM #2: SOLID ROCKET BOOSTER REPAIR PREPARATION **TRT: TDB**
Kennedy Space Center employees erect scaffolding and platforms to begin work on boosters

ITEM #3: VISION ENHANCEMENT SYSTEM **TRT: TDB**
Jacob Webb using the system to help him see

ITEM #4 : INTERVIEW WITH JACOB WEBB **TRT: TBD**
Jacob Webb discusses how his life has changed using this space-age technology

ITEM #5: SATURN RING CROSSING ANIMATION **TRT: 2:14**
Animation showing different views of the planet Saturn during the recent ring crossing.

ITEM #6: INTERVIEW WITH PHILIP NICHOLSON **TRT: :20**

-more-

*********3:00 p.m.FEED*******

ITEM #1: HUBBLE VIEWS SATURN'S RINGS EDGE-ON **TRT: :30**
Image of Saturn ring system seen tilted edge-on

ITEM #2: SATURN RING CROSSING SEQUENCE **TRT: :30**
Sequence of three images on Saturn following Earth's passage across the giant planet

NASA Television is broadcast on Spacenet 2, transponder 5, channel 9, C-Band, located at 69 degrees West longitude, with horizontal polarization. Frequency will be on 3880.0 megahertz, with audio on 6.8 megahertz.

-end-

News Release

National Aeronautics and
Space Administration

Washington, DC 20546
(202) 358-1600

For Release

August 11, 1995

Jim Cast
Headquarters, Washington, DC
(Phone: 202/358-1779)

Lanee Cobb
Stennis Space Center, MS
(Phone: 601/688-3341)

RELEASE: 95-136

STENNIS RECEIVES VISIT FROM FIRST MISSISSIPPIAN TO USE SPACE TECHNOLOGY-RELATED VISION ENHANCEMENT SYSTEM

NASA's John C. Stennis Space Center recently welcomed the first person from Mississippi to use the Low Vision Enhancement System (LVES), a product of NASA's Technology Transfer Program.

Jacob Webb of Wiggins, MS, visited Stennis on Aug. 7 to share his experiences after receiving the head-mounted enhancement imaging system. Scientists from Stennis and the Johns Hopkins Wilmer Eye Institute, Baltimore, MD, used NASA technology developed for computer processing of satellite images in the development of the system.

The 21-year-old was born so severely nearsighted as to be considered legally blind, and the condition had greatly degenerated over the years. Since he received the LVES in June, Webb has discovered a whole new world. He can see expressions on his friends' faces, read street signs 1/4-mile away and, for the first time, open his dorm room window to watch birds flying in the sky.

"I knew people would ask me how I feel about this, and it's hard to come up with an answer for that. I can show you, I can turn cartwheels, but I really can't find the words to tell you," he said. "You go practically your whole life, 21 years, without something and suddenly someone just hands it to you and says, 'Here you go'."

Webb's mother read about the original LVES design several years ago from a news release written at Stennis for a local newspaper. The family decided the LVES, referred to as "ELVIS" by its users, would be beneficial to Webb and traveled to Baltimore to start the process for receiving a system. Five years later, the University of Mississippi junior will finally be able to sit in class this fall and take notes like his classmates.

-more-

The LVES is actually a portable image processing system that could make it possible to improve visual capability by appropriately enhancing and altering images to compensate for a patient's impaired eyesight. The system is designed to provide a personally adapted view of the world to someone suffering from a particular vision problem. It consists of two orientation cameras, a zoom camera and a video projection system that provides a wide field of view for its users. The headset and the hand-held control weigh about two-pounds each. So far, there are about 100 units in use.

"It is good to see the positive impact of technology transfer not only from the commercial development aspect but for the improvement of the quality of life," said Anne Johnson, technology transfer officer at Stennis. While at Stennis, Webb met with experts from the Technology Transfer Office and other Stennis personnel who helped in the development of the system. He also met with Center Director Roy Estess, who expressed congratulations to Webb. "The people at NASA and Stennis Space Center work diligently to use space technology to create products that Americans can use everyday," Estess said. "It is wonderful to meet Jacob and see that his life has been greatly improved by this device."

-end-

EDITORS' NOTE: A photo is available to media representatives by faxing your request (on your company's letterhead) to the News Branch at 202/358-4333. Photo numbers are: Color - 95-HC-493; B&W - 95-H-504.

NASA press releases and other information are available automatically by sending an Internet electronic mail message to domo@hq.nasa.gov. In the body of the message (not the subject line) users should type the words "subscribe press-release" (no quotes). The system will reply with a confirmation via E-mail of each subscription. A second automatic message will include additional information on the service. Questions should be directed to (202) 358-4043.

Video Advisory

National Aeronautics and
Space Administration

Washington, DC 20546
(202) 358-1600

For Release

August 13, 1995

Dwayne C. Brown
Headquarters, Washington, DC
(Phone: 202/358-1726)

VIDEO ADVISORY: V95-122

RUSSIAN DOCKING MODULE, SATURN RINGS,VISION ENHANCEMENT ON NTV MONDAY

On Monday NASA TV will air footage of preparation of solar array panels for installation on the STS-74 Russian Docking Module at the Kennedy Space Center. The module will be used during the next Mir docking mission scheduled for October 1995.

Images of Saturn's ring system will show the system seen tilted edge-on in a NASA Hubble Telescope picture taken August 10 when the planet was 895 million miles away. When viewed edge-on the rings are so dim they almost disappear because they are so thin. Following that image, available images will show the Saturn ring crossing sequence.

NASA TV will show footage of a head-mounted Vision Enhancement Imaging System used successfully by Jacob Webb of Wiggins, MS. The system enables Webb -- considered legally blind -- to see. Developed by NASA's Stennis Space Center, MS, and the Johns Hopkins Wilmer Eye Institute, Baltimore, MD, this system is derived from technology developed for computer processing of satellite images.

NASA Television video news files air at noon, 3, 6 and 9 p.m. EDT.

ITEM #1: STS-74 RUSSIAN DOCKING MODULE **TRT: 1:40**
Solar array installation for the STS-74 Russian Docking Module at the Kennedy Space Center

ITEM #2: RUSSIAN DOCKING MODULE TRANSFER **TRT: TBD**
The STS-74 Russian Docking Module was transferred to NASA in a signing ceremony at the Kennedy Space Center

ITEM #3: HUBBLE AGAIN VIEWS SATURN RINGS EDGE-ON **TRT: :30**
Saturn's magnificent ring system is seen tilted edge-on in this Hubble picture taken Aug. 10

ITEM #4: SATURN RING PLANE CROSSING SEQUENCE **TRT: :30**
Available Saturn images taken by Hubble Aug. 10

ITEM #5: VISION ENHANCEMENT SYSTEM **TRT: TDB**
Jacob Webb visited Stennis Space Center on Aug. 7; uses Vision Enhancement System to help him see

ITEM #6: INTERVIEW WITH JACOB WEBB **TRT: 1:56**
Jacob Webb discusses how his life has changed using this space-age technology

-end-

News Release

National Aeronautics and
Space Administration

Washington, DC 20546
(202) 358-1600

For Release

Dwayne Brown
Headquarters, Washington, DC
(Phone: 202/358-1726)

August 14, 1995

Jim Sahli
Goddard Space Flight Center, Greenbelt, MD
(Phone: 301/286-0697)

RELEASE: C95-1

UNISYS CORP. SELECTED TO NEGOTIATE $100 MILLION CONTRACT

NASA has selected the Unisys Corp., McLean, VA, to negotiate a two-year basic period and one three-year option-period cost-plus-award-fee contract to provide quality assurance and engineering support to the Office of Flight Assurance at the Goddard Space Flight Center, Greenbelt, MD. The total proposed amount for the contract cost and fee is approximately $100 million.

The contract will include quality assurance for flight hardware, software, and mission integration to augment and supplement the Office of Flight Assurance in implementing the Center's flight assurance program. The scope of work requires Unisys to provide support for: electronic parts, materials, and packaging engineering, which includes laboratory operations; quality engineering; reliability and safety engineering; and information systems.

The total contract period of performance, including the option, will be from October 1, 1995 through September 30, 2000.

-end-

NASA press releases and other information are available automatically by sending an Internet electronic mail message to domo@hq.nasa.gov. In the body of the message (not the subject line) users should type the words "subscribe press-release" (no quotes). The system will reply with a confirmation via E-mail of each subscription. A second automatic message will include additional information on the service. Questions should be directed to (202) 358-4043.

Video Advisory

National Aeronautics and
Space Administration

Washington, DC 20546
(202) 358-1600

For Release

August 14, 1995

Dwayne C. Brown
Headquarters, Washington, DC
(Phone: 202/358-1726)

VIDEO ADVISORY: V95-123

SPACE AGE SENSOR HELPS SAVE INFANTS' LIVES ON NTV TUESDAY

On Tuesday NASA TV will air footage of University of California pediatric surgeons using biosensor and telemetry technology from NASA to monitor fetuses with life-threatening congenital conditions.

Existing monitoring devices, while useful, cannot provide the continuous fetal monitoring physicians need. There is an urgent need for continuous monitoring of fetal heart rate and intra-uterine pressure that is practical for use in both hospital and out-patient settings. Space-age technology meets that need.

NASA Television video news files air at noon, 3, 6 and 9 p.m. EDT.

ITEM #1: SPACE AGE SENSOR HELPS SAVE INFANTS' LIVES **TRT: :51**
Demonstrates how the device is used. This item includes graphic scenes from a surgical procedure

ITEM #2: INTERVIEW: DR. MICHAEL HARRISON **TRT: 2:14**
Harrison discusses the benefits of using the fetal monitoring system and how it may be used more in the future

ITEM #3: INTERVIEW: JOHN HINES **TRT: 1:14**
Explains how the sensor works once it is implanted

-end-

NASA Television is broadcast on Spacenet 2, transponder 5, channel 9, C-Band, located at 69 degrees West longitude, with horizontal polarization. Frequency will be on 3880.0 megahertz, with audio on 6.8 megahertz.

Internet Advisory

National Aeronautics and
Space Administration

Washington, DC 20546
(202) 358-1600

For Release

Allen Kenitzer
Goddard Space Flight Center, Greenbelt, MD
(Phone: 301/286-8955)

August 15, 1995

I95-10

NASA GODDARD SPACE FLIGHT CENTER NEW HOME PAGE ON-LINE

NASA's Goddard Space Flight Center in Greenbelt, MD, launches a new Internet World Wide Web home page today. Filled with colorful images and detailed scientific information, the home page will provide a wealth of information to the public via the Internet.

The Web site is managed by the Goddard Office of Public Affairs, and the main sections of the home page include:

* **Goddard Missions**, featuring flight projects, observatories in orbit, upcoming missions, and sounding rockets and scientific balloons;
* **Space Sciences**, featuring imagery from the Hubble Space Telescope and other spacecraft;
* **Earth Sciences**, with detailed information on Planet Earth;
* **Goddard Organizations**, arranged by work units or directorates;
* **The Newsroom**, designed for reporters who need points of contact, status reports, fact sheets and updates on current missions;
* **Public Services and Information**, with information on speakers, exhibits for local community events and model rocket launches at Goddard; and
* **Education Section** designed for teachers. This section will outline programs for teachers, and provide points of contact for educational materials.

The Goddard Space Flight Center home page is available at URL:

http://pao.gsfc.nasa.gov/gsfc.html

An anonymous File Transfer Protocol (FTP) server also is available. It includes all 1995 press releases and can be accessed at PAO.GSFC.NASA.GOV in the /pub/pao/Releases/directory.

-end-

News Release

National Aeronautics and
Space Administration

Washington, DC 20546
(202) 358-1600

For Release

Michael Braukus
Headquarters, Washington, DC
(Phone: 202/358-1979)

August 15, 1995

Ann Hutchison
Ames Research Center, Mountain View, CA
(Phone: 415/604-4968)

RELEASE: 95-137

SPACE AGE SENSOR HELPS SAVE INFANTS' LIVES

NASA and the University of California at San Francisco are collaborating to apply medical sensor technology to save the lives of newborn children and reduce medical costs.

Pediatric surgeons at the university's Fetal Treatment Center (FTC) are using biosensor and telemetry technology from NASA's Ames Research Center, Mountain View, CA, to monitor the condition of fetuses with life-threatening congenital conditions. A biosensor is a device that measures medical, biological, physiological or biochemical parameters. Telemetry is the transmission of various measurements to a distant recording device.

"The technology is fabulous," said FTC director Michael Harrison, M.D. "The whole concept of using telemetry is a revolution that we desperately need for treating fetal defects." Harrison said existing monitoring devices, while useful, cannot provide the continuous fetal monitoring physicians need. He said there is an urgent need for a continuous monitor of fetal heart rate and intra-uterine pressure that is practical for use in both hospital and out-patient settings. Harrison believes this type of continuous monitoring of physiologic parameters by a portable, hand-held device would be "an incredible advance" for fetal surgery.

"Many of NASA's requirements for biosensor and telemetry technology have direct application to medical and surgical needs on Earth," said John W. Hines, manager of Ames' Sensors 2000 program. The program develops biosensor and telemetry technology to monitor the health of astronauts in space.

Harrison and other FTC surgeons have pioneered the use of advanced surgical procedures to correct congenital defects in human fetal patients. One such condition, for example, is a diaphragmatic hernia, a hole in the diaphragm that allows internal organs to shift from the abdominal cavity into the chest cavity. The result is less space for the lungs to develop. About 75 percent of children with diaphragmatic hernias die, according to Harrison.

-more-

The procedure involves exposure of the fetus by cesarean section and surgical correction of the congenital defect. Surgeons then implant a biotransmitter and sensors under the fetus' skin or in the uterus. The sensors measure fetal heart rate and pressure within the uterus.

"Monitoring the status of the fetus during and after surgery is critical to the success of this procedure," Harrison said. Once the infant is stable after birth, surgeons remove the sensors and transmitter.

Conventional treatment of fetal diaphragmatic hernia can cost as much as $1 million, including a hospital stay of up to six months. The FTC procedure costs only slightly more than a standard cesarean section and requires just a two-week hospital stay for the infant.

Ames also is working with the FTC to expand its fetal monitoring capability by developing a small, lightweight, portable fetal health status monitor. This would allow a pregnant mother to monitor her baby outside the hospital, with data sent to an external recording device for later analysis. FTC surgeons said the advanced technology also may some day benefit all critically ill patients by eliminating the need to run repeated tests to analyze a patient's condition.

NASA's advanced technology initiative was designed to provide biosensor and bio-instrumentation systems technology expertise to the Agency's life sciences programs. These technologies are of interest to NASA as a way of continuously monitoring an astronaut's adaptation to microgravity. The initiative is managed by Ames for NASA's Office of Life and Microgravity Sciences and Applications.

-end-

NASA press releases and other information are available automatically by sending an Internet electronic mail message to domo@hq.nasa.gov. In the body of the message (not the subject line) users should type the words "subscribe press-release" (no quotes). The system will reply with a confirmation via E-mail of each subscription. A second automatic message will include additional information on the service. Questions should be directed to (202) 358-4043.

News Release

National Aeronautics and
Space Administration

Washington, DC 20546
(202) 358-1600

For Release

Ed Campion
Headquarters, Washington, DC
(Phone: 202/358-1780)

August 15, 1995

Linda Copley
Johnson Space Center, Houston
(Phone: 713/483-5111)

RELEASE: 95-138

BOEING, KHRUNICHEV SIGN CONTRACT FOR SPACE STATION ELEMENT

Final agreement was reached today on a $190 million contract for Russia to provide the first flight element of the international Space Station.

The agreement signed by NASA's Space Station prime contractor, Boeing Defense & Space Group, and Russia's State Research and Production Space Center (Khrunichev) will lead to completion, delivery, launch, and on-orbit checkout in November 1997 of the Functional Energy Block -- or FGB -- a modified Russian space vehicle that will serve as the first building block for the on-orbit construction of the international Space Station.

Space Station Program Manager Randy Brinkley noted that work is well underway on the FGB. "The Russians, like ourselves, are building hardware," he said. "Just as we're on schedule and have completed over 48,000 pounds of flight quality hardware on the U.S. side, the Russians also are on schedule for a November 1997 launch of the FGB."

After initial use as a power and propulsion module, the FGB will serve as a fuel and equipment storage facility. The FGB also forms a link in the Space Station's overall power and information distribution systems.

In February, NASA and the Russian Space Agency (RSA) signed a government-level protocol complementing the contractual agreement with Khrunichev for the U.S. purchase of the FGB. The protocol calls for RSA to launch the FGB on a Russian Proton booster and to provide navigational control in orbit as well as providing related engineering, integration, logistics, maintenance and training support for the FGB.

A critical design review of the FGB was completed in April, and manufacturing and test of key structural components is in progress.

-more-

Assembly of the international Space Station in orbit will progress rapidly following launch of the FGB in November 1997. One month later, a Space Shuttle will carry to orbit the first U.S.-built element, an interlinking module called Node 1, which will be joined to the FGB and will provide docking ports and utility hookups for subsequent U.S. and international laboratory and habitation modules. Initial assembly and installation of a three-person international scientific crew will be accomplished by March 1999. Science and research will progress in parallel with final assembly, and at completion in June 2002, station will have a six-person crew operating from seven laboratory and research modules representing the combined efforts of the U.S., Europe, Russia, Japan and Canada.

-end-

NASA press releases and other information are available automatically by sending an Internet electronic mail message to domo@hq.nasa.gov. In the body of the message (not the subject line) users should type the words "subscribe press-release" (no quotes). The system will reply with a confirmation via E-mail of each subscription. A second automatic message will include additional information on the service. Questions should be directed to (202) 358-4043.

News Release

National Aeronautics and
Space Administration

Washington, DC 20546
(202) 358-1600

For Release

Beth Schmid
Headquarters, Washington, DC
(Phone: 202/358-1760)

August 16, 1995

INTERNET ADVISORY: I95-11

NASA MIDRANGE PROCUREMENTS GO ON INTERNET IN OCTOBER

NASA is leading the Federal Government in providing procurement information to industry over the Internet, and on October 1, 1995, the Internet will be the only source of most NASA synopses and solicitations for business opportunities.

For the past two years, NASA has been testing a procurement approach, called MidRange, designed to benefit both the Agency and its industry partners by providing a less costly, more expeditious contracting process, said Deidre Lee, Associate Administrator for Procurement. To further enhance and expedite the process, NASA will use the Internet to provide MidRange synopses rather than publishing them in the Commerce Business Daily (CBD). The two major advantages to this approach are that industry will have immediate access to solicitations and can begin preparing a proposal, and the 45-day waiting period between the issuance of a synopsis and the receipt of proposals will be waived.

Effective October 1, 1995, synopses for MidRange procurements valued at less than $500,000 with options up to a total of $2.5 million will be available only on the Internet.

NASA procurement information is available on the NASA Procurement Office home page on the World Wide Web, connecting to all of the NASA Center procurement home pages, as well as providing other information about NASA's procurement process. Other Federal procurement information, including NASA, can be obtained from the Federal Acquisition Jumpstation. The URL for the NASA Procurement home page is:
http://www.hq.nasa.gov/office/procurement.

The URL for the Federal Acquisition Jumpstation is:
http://procure.msfc.nasa.gov/fedproc/home.html.

-end-

NASA press releases and other information are available automatically by sending an Internet electronic mail message to domo@hq.nasa.gov. In the body of the message (not the subject line) users should type the words "subscribe press-release" (no quotes). The system will reply with a confirmation via E-mail of each subscription. A second automatic message will include additional information on the service. Questions should be directed to (202) 358-4043.

News Release

National Aeronautics and
Space Administration

Washington, DC 20546
(202) 358-1600

For Release

August 16, 1995

Brian Welch
Headquarters, Washington, DC
(Phone: 202/358-1600)

RELEASE: 95-139

GROSS NAMED NASA INSPECTOR GENERAL

Following nomination by President Bill Clinton, Roberta L. Gross has been confirmed by the U.S. Senate to become NASA's Inspector General. The Senate confirmed Gross on Friday, Aug. 11.

Gross was born in Dayton, OH, and was formerly the Director of Investigations and Counsel to the Inspector General for Amtrak from March 1990. She was a civil staff attorney for the Office of Corporation Counsel for the District of Columbia from March 1982 to November 1983 until being named chief of a civil litigation section from November 1983 to July 1989. Other previous positions included staff attorney for the consumer protection division with the Federal Trade Commission from February 1978 to October 1979 and Assistant District Attorney for the Office of District Attorney (Northern District) Cambridge, MA, from September 1978 to October 1979. Prior to those positions, Gross taught at the secondary level in Massachusetts.

Gross holds a bachelor's degree in English/philosophy from Vassar College, a master's degree in English from the University of Michigan and a J.D. degree from Northeastern University. She is married with two children and resides in Washington, DC.

The Office of the Inspector General performs audits and investigations to assist NASA management in promoting economy, efficiency and effectiveness in the administration of the agency's programs and operations. With over 88 percent of NASA's budget allocated for procurement, a significant amount of the Inspector General's activity is directed toward detecting and preventing mismanagement and contract fraud.

-end-

NASA press releases and other information are available automatically by sending an Internet electronic mail message to domo@hq.nasa.gov. In the body of the message (not the subject line) users should type the words "subscribe press-release" (no quotes). The system will reply with a confirmation via E-mail of each subscription. A second automatic message will include additional information on the service. Questions should be directed to (202) 358-4043.

Video Advisory

National Aeronautics and
Space Administration

Washington, DC 20546
(202) 358-1600

For Release

August 17, 1995

David E. Steitz
Headquarters, Washington, DC
(Phone: 202/358-1730)

VIDEO ADVISORY: V95-127

NEW INTERNET TECHNOLOGY FEATURED ON NTV FRIDAY

A revolutionary low-cost networking technology developed by NASA's Langley Research Center, Hampton, VA, will soon make it possible for remotely located kindergarten through grade 12 school children to gain affordable access to the Internet. NASA's Information Infrastructure Technology and Applications program recently connected two high schools in California's Mojave desert to the Internet. Footage and interviews will highlight this activity.

NASA Television video news files air at noon, 3, 6 and 9 p.m. EDT.

ITEM #1: LOW-COST NETWORKING TECHNOLOGY **TRT: :20**
Low-cost networking technology allows students in Mojave Desert Internet access.

ITEM #2: INTERVIEW WITH LEE DUKE **TRT: :59**
Duke, project manager for Information Infrastructure Technology and Applications (IITA) Program discusses new technology.

ITEM #3: INTERVIEW WITH LINDA MASSIMINI **TRT: :49**
Computer science teacher at Silver Lake High School discusses program.

ITEM #4: INTERVIEW WITH MARK LEON **TRT: :41**
Deputy Program Director of IITA discusses new technology.

ITEM #5: INTERVIEW WITH GARY WARREN **TRT: :26**
Aeroscience Research Scientist discusses potential national use of new technology.

NASA Television is broadcast on Spacenet 2, transponder 5, channel 9, C-Band, located at 69 degrees West longitude, with horizontal polarization. Frequency will be on 3880.0 megahertz, with audio on 6.8 megahertz.

-end-

News Release

National Aeronautics and
Space Administration

Washington, DC 20546
(202) 358-1600

For Release

Brian Welch
Headquarters, Washington, DC
(Phone: 202/358-1600)

August 17, 1995

RELEASE: 95 -140

MULVILLE NAMED CHIEF ENGINEER

Dr. Daniel R. Mulville has been named NASA Chief Engineer at the agency Headquarters in Washington, effective September 1. Mulville will succeed David H. Mobley, who will be leaving the position to return to the Marshall Space Flight Center, Huntsville, AL, where he will chair a Source Evaluation Board overseeing the Space Shuttle Program consolidation effort.

The Chief Engineer reports directly to the Administrator and is responsible for overall review of the technical readiness and execution of all NASA programs. The Chief Engineer also provides an integrated focus for agencywide engineering policies, standards, and practices.

Since 1994 Mulville has been serving as Deputy Chief Engineer at NASA, responsible for ensuring that development efforts and mission operations of the agency are conducted on a sound engineering basis. He has helped plan, develop and maintain engineering standards and capabilities for NASA.

From 1990 to 1994 Mulville was the Director of the Engineering and Quality Management Division in the Office of Safety and Mission Assurance. In that position, Mulville was responsible for development of NASA's engineering and quality assurance standards and procedures related to design and development of spacecraft and aeronautics systems.

From 1986 to 1990 Mulville was Deputy Director of the Materials and Structures Division in the Office of Exploration and Technology. He managed the Advanced Composite Technology program, the Control of Flexible Structures program, and materials and structures elements of the Advanced Launch Systems, Space Exploration Initiative, and High Speed Civil Transport programs. Mulville also directed NASA's participation in the joint NASA/FAA Aging Aircraft program.

-more-

Prior to his employment with NASA, Mulville served as the Structures Technology Manager at the Naval Air Systems Command from 1979 to 1986. He led the development of structural design, test, and certification methods and was the program manager for development of composites for the AV-8B, F/A-18, and advanced aircraft and missile programs. He served as a Program Manager for Structures Research at the Office of Naval Research in 1975 and was a mechanical engineer at the Naval Research Laboratory involved in design and analysis of aircraft, missile and ship structures from 1962 to 1979.

Mulville received his bachelor of mechanical engineering degree in 1962 and masters of science in engineering in 1966 from the George Washington University and a Ph.D. in structural mechanics from Catholic University in 1974. He attended the Industrial College of the Armed Forces in 1985-86.

-end-

NASA press releases and other information are available automatically by sending an Internet electronic mail message to domo@hq.nasa.gov. In the body of the message (not the subject line) users should type the words "subscribe press-release" (no quotes). The system will reply with a confirmation via E-mail of each subscription. A second automatic message will include additional information on the service. Questions should be directed to (202) 358-4043.

News Release

National Aeronautics and
Space Administration

Washington, DC 20546
(202) 358-1600

For Release

Don Nolan-Proxmire
Headquarters, Washington, DC
(Phone: 202/358-1983)

August 17, 1995

Cam Martin
Dryden Flight Research Center, Edwards, CA
(Phone: 805/258-3448)

Michael Finneran
Langley Research Center, Hampton, VA
(Phone: 804/864-8150)

Michael Mewhinney
Ames Research Center, Mountain View, CA
(Phone: 415/604-3938)

RELEASE: 95-141

LOW-COST NETWORKING TECHNOLOGY OPENS INTERNET ACCESS FOR THE NATION'S K-12 SCHOOLS

A revolutionary low-cost networking technology developed by NASA's Langley Research Center, Hampton, VA, will soon make it possible for remotely located kindergarten through grade 12 (K-12) schools to gain affordable access to the Internet. NASA's Information Infrastructure Technology and Applications program, IITA, (part of the High Performance Computing and Communications initiative) recently connected two high schools in California's Mojave desert to the Internet under this program.

This unique networking solution is based on high-speed asynchronous modems using data compression and World Wide Web disk caching to emulate a high-bandwidth connection. High-bandwidth connections are generally so costly that they are beyond the reach of K-12 schools. Data services over phone lines that emulate high-bandwidth connections should bring these services within their reach.

NASA's effort in this area demonstrates that the educational benefit of a National Information Infrastructure (NII) can be extended to all Americans regardless of their geographic location or economic circumstances. Silver Valley High School (Yermo, CA) and Barstow High School (Barstow, CA) were chosen as the initial sites for this technology based on their remote location in

-more-

the Mojave desert and their proximity to NASA's Dryden Flight Research Center, Edwards, CA, which collaborates with Langley. This project demonstrates that remotely located schools can economically be placed "next door" to the rest of the nation's schools as they plug in to the NII.

NASA provided the funds for the computer hardware, software, training, Internet connections, and systems development for this project. NASA also will provide expertise and limited consultation. The schools have been outfitted with a premiere network solution that is inexpensive by contemporary terms, upwardly compatible for new network infrastructures and can be duplicated across the country. Silver Valley and Barstow will immediately broaden their outreach to the entire educational community on the Internet, which reaches all 50 states and over 170 countries around the world. Teachers from the two high schools will attend Internet training workshops where they will develop computer proficiency and network literacy. They will be instructed on computer system administration, security and ethics.

The World Wide Web home pages for these schools can be viewed at **http://www.svhs.svusd.k12.ca.us** and **http://www.bhs.barstow.k12.ca.us**, respectively.

"NASA believes that through well designed, executed and publicized pilot programs such as the one planned for Silver Valley and Barstow, new NII technologies will be accelerated and made affordable for the K-12 community," said Mark Leon, deputy program manager for NASA's IITA Program. "In this era of very tight public school budgets, NASA believes that unless the federal government supports the 'pathfinding' role of demonstration pilot projects, the technology will not make its way into America's schools for decades to come."

The IITA program is managed by NASA's Ames Research Center, Mountain View, CA, and is coordinated with the Education Division at NASA Headquarters, Washington, DC.

-end-

NASA press releases and other information are available automatically by sending an Internet electronic mail message to domo@hq.nasa.gov. In the body of the message (not the subject line) users should type the words "subscribe press-release" (no quotes). The system will reply with a confirmation via E-mail of each subscription. A second automatic message will include additional information on the service. Questions should be directed to (202) 358-4043.

News Release

National Aeronautics and
Space Administration

Washington, DC 20546
(202) 358-1600

For Release

August 18, 1995

Ed Campion
Headquarters, Washington
(Phone: 202/358-1778)

Kyle Herring
Johnson Space Center, Houston
(Phone: 713/483-5111)

RELEASE: 95-142

ASTRONAUT BAGIAN JOINS EPA

Two-time Space Shuttle astronaut Dr. James P. Bagian, has left the astronaut corps for a position with the Environmental Protection Agency's National Vehicle and Fuel Emissions Laboratory in Ann Arbor, MI.

Bagian has been conducting biomedical research and practicing clinical medicine at William Beaumont Hospital in Royal Oak, MI, since early 1994 while on a leave of absence from NASA.

"The decision to leave NASA was a very difficult one for me," Bagian said. "Working for the EPA gives me the opportunity to participate in the Mission to Planet Earth -- just from a different vantage point."

Bagian was born in Philadelphia and joined NASA in 1978 as a flight surgeon and research medical officer. He was selected to be an astronaut with the class of 1980.

His first Shuttle flight was in March 1989 aboard Discovery on the STS-29 mission to deploy a Tracking and Data Relay Satellite. His second flight in June 1991 aboard Columbia was the first dedicated to life sciences research. Experiments conducted on STS-40 explored how the heart, blood vessels, lungs, kidneys and hormone-secreting glands respond to microgravity.

-end-

NASA press releases and other information are available automatically by sending an Internet electronic mail message to domo@hq.nasa.gov. In the body of the message (not the subject line) users should type the words "subscribe press-release" (no quotes). The system will reply with a confirmation via E-mail of each subscription. A second automatic message will include additional information on the service. Questions should be directed to (202) 358-4043.

Video Advisory

National Aeronautics and
Space Administration

Washington, DC 20546
(202) 358-1600

For Release

August 20, 1995

David E. Steitz
Headquarters, Washington, DC
(Phone: 202/358-1730)

VIDEO ADVISORY: V95-128

WIND TUNNEL, SHUTTLE CONSOLIDATION BRIEFING ON NTV

A newly renovated wind tunnel that began operating nearly 50 years ago will reopen on Monday with a ceremony at the NASA Ames Research Center, Moffet Field, CA. Powered by a 15,000 horsepower electric motor, the tunnel is designed to test aircraft models at airspeeds up to Mach 0.61, and will help engineers design faster, better and cheaper aircraft.

Also on NASA TV Monday will be a briefing at the Johnson Space Center, Houston, to members of industry on the Space Shuttle Program consolidation efforts. The briefing is due to begin at 2p.m. EDT. A local-only press briefing from Houston will air later in the day, time to be determined.

NASA Television video news files air at noon, 3, 6 and 9 p.m. EDT.

ITEM #1: RENOVATED PRESSURE WIND TUNNEL OPENS **TRT: 2:00**
Newly renovated wind tunnel to aid in aeronautical research.

ITEM #2: INTERVIEW WITH NANCY BINGHAM **TRT: 2:00**
Deputy Director of Aeronautics at Ames discusses renovated tunnel.

2 P.M. EDT -- NASA BRIEFING TO INDUSTRY ON SHUTTLE CONSOLIDATION

NASA Television is broadcast on Spacenet 2, transponder 5, channel 9, C-Band, located at 69 degrees West longitude, with horizontal polarization. Frequency will be on 3880.0 megahertz, with audio on 6.8 megahertz.

-end-

Video Advisory

National Aeronautics and
Space Administration

Washington, DC 20546
(202) 358-1600

For Release

August 21, 1995

David E. Steitz
Headquarters, Washington, DC
(Phone: 202/358-1730)

VIDEO ADVISORY: V95-129

RENOVATED AMES WIND TUNNEL FEATURED ON NTV TUESDAY

A newly renovated wind tunnel that began operating nearly 50 years ago will reopen on Wednesday with a ceremony at the NASA Ames Research Center, Moffet Field, CA. The opening ceremony on Wednesday will begin at 9:30 a.m. PDT. Powered by a 15,000 horsepower electric motor, the tunnel is designed to test aircraft models at airspeeds up to Mach 0.61, and will help engineers design faster, better and cheaper aircraft.

NASA Television video news files air at noon, 3, 6 and 9 p.m. EDT.

ITEM #1: RENOVATED PRESSURE WIND TUNNEL OPENS **TRT: 2:00**
Newly renovated wind tunnel to aid in aeronautical research.

ITEM #2: INTERVIEW WITH NANCY BINGHAM **TRT: 2:00**
Deputy Director of Aeronautics at Ames discusses renovated tunnel.

NASA Television is broadcast on Spacenet 2, transponder 5, channel 9, C-Band, located at 69 degrees West longitude, with horizontal polarization. Frequency will be on 3880.0 megahertz, with audio on 6.8 megahertz.

-end-

News Release

National Aeronautics and
Space Administration

Washington, DC 20546
(202) 358-1600

For Release

August 21, 1995

Don Nolan-Proxmire
Headquarters, Washington, DC
(Phone: 202/358-4727)

Michael Mewhinney
Ames Research Center, Mountain View, CA
(Phone: 415/604-3937)

RELEASE: 95-143

REFURBISHED WIND TUNNEL TO OPEN AT NASA AMES RESEARCH CENTER

"Winds of Excellence" will be the theme of a grand opening ceremony this week for a newly renovated NASA wind tunnel that began operating nearly 50 years ago.

The dedication ceremony for NASA Ames Research Center's 12-foot Pressure Wind Tunnel will be held Wednesday, Aug. 23, from 9:30 a.m. to 10:30 a.m. PDT in front of the tunnel. Tours will be offered following the ceremony from 10:30 to 11:30 a.m. PDT.

Congressman Norm Mineta (D-San Jose) will be the keynote speaker at the ceremony, which also will feature brief remarks from Ames Director Dr. Ken Munechika and other NASA and aerospace industry officials.

Built in 1946, the wind tunnel has tested models of most U.S. commercial aircraft in service over the past half century, including the Boeing 737, 757 and 767; Lockheed L-1011; and McDonnell Douglas DC-9 and DC-10.

The new wind tunnel was restored at a cost of $115 million to replace the original which gradually suffered deterioration of its pressure shell due to extensive use. By 1986, cracks in the tunnel walls had eliminated its pressurization capability. "The shell's structural steel began to exhibit serious fatigue after 41 years of service," said project manager Harry Gobler. "Essentially, it just wore out."

-more-

Restoration began in 1990 and was completed in November 1994. The project included the complete rebuilding of the closed-loop pressure vessel and installation of an innovative air lock system around the test section. The new air lock system allows access to the test section without depressurizing the entire tunnel, thereby significantly increasing its productivity.

"This has been one of Ames' workhorse wind tunnels," Gobler said. "There's no other facility in the country that duplicates the testing it does. No other tunnel has such excellent air flow quality."

The new tunnel measures about 300 feet long and about 100 feet wide, with the diameter ranging from the 12-foot test section to a maximum of 68 feet in the settling chamber. Powered by a 15,000-horsepower synchronous electric motor, the tunnel is designed to test aircraft models at airspeeds up to Mach 0.61 (Mach 1 equals 760 mph, the speed of sound at sea level).

-end-

NASA press releases and other information are available automatically by sending an Internet electronic mail message to domo@hq.nasa.gov. In the body of the message (not the subject line) users should type the words "subscribe press-release" (no quotes). The system will reply with a confirmation via E-mail of each subscription. A second automatic message will include additional information on the service. Questions should be directed to (202) 358-4043.

Video Advisory

National Aeronautics and
Space Administration

Washington, DC 20546
(202) 358-1600

For Release

August 22, 1995

Dwayne Brown
Headquarters, Washington, DC
(Phone: 202/358-1726)

VIDEO ADVISORY: V95-130

WEATHER SATELLITE IMAGES OF HURRICANES ON NTV

On Wednesday NASA Television will air images taken by the GOES-9 weather satellite. Sequences will show the coasts of Florida and Cuba while thunderstorms were being formed last July 2. Unedited footage will air of Hurricane Erin from August 3 showing the hurricane approaching the Gulf coast of Florida. A "rapid scan" (one minute) sequence showing an image of Hurricane Felix taken on August 16 and 17 also will be shown.

GOES-9 is a geostationary weather satellite developed by the National Oceanic and Atmospheric Administration. The satellite provides atmospheric images, temperature and humidity profiles, wind velocity data and severe storm coverage of the Earth's Western hemisphere. GOES-9 was launched into space last May.

NASA TV will replay footage of a newly renovated wind tunnel that began operating nearly 50 years ago that will reopen on Wednesday with a ceremony at the Ames Research Center, Moffet Field, CA. The opening ceremony will begin at 9:30 a.m. PDT. Powered by a 15,000 horsepower electric motor, the tunnel is designed to test aircraft models at airspeeds up to almost Mach 1, and will help engineers design faster, better and cheaper aircraft.

NASA Television video news files air at noon, 3, 6 and 9 p.m. EDT.

ITEM #1: GOES-9 WEATHER SATELLITE IMAGES OF HURRICANES TRT: tbd
Images of storms and two recent hurricanes from the GOES-9 satellite.

ITEM #2: REPLAY - RENOVATED WIND TUNNEL OPENS TRT: 2:00
ITEM #3: REPLAY - INTERVIEW WITH NANCY BINGHAM TRT: 2:00

NASA Television is broadcast on Spacenet 2, transponder 5, channel 9, C-Band, located at 69 degrees West longitude, with horizontal polarization. Frequency will be on 3880.0 megahertz, with audio on 6.8 megahertz.

-end-

Video Advisory

National Aeronautics and
Space Administration

Washington, DC 20546
(202) 358-1600

For Release

August 23, 1995

Dwayne Brown
Headquarters, Washington, DC
(Phone: 202/358-1726)

VIDEO ADVISORY: V95-131

WEATHER SATELLITE IMAGES OF HURRICANES ON NTV

On Thursday NASA Television will air images taken by the GOES-9 weather satellite highlighting the increased resolution and sensitivity of this new satellite.

Sequences will show the coasts of Florida and Cuba as thunderstorms developed last July 2. Unedited footage will air of Hurricane Erin from August 3 showing the hurricane approaching the Gulf Coast of Florida. A "rapid scan" (one minute) sequence showing an image of Hurricane Felix hovering off the U.S. Atlantic Coast on August 16 and 17 also will be shown.

GOES-9 is a geostationary weather satellite developed by NASA for the National Oceanic and Atmospheric Administration. The satellite provides atmospheric images, temperature and humidity profiles, wind velocity data and severe storm coverage of the Earth's Western hemisphere. GOES-9 was launched into space last May.

NASA Television video news files air at noon, 3, 6 and 9 p.m. EDT.

ITEM #1: GOES-9 SATELLITE IMAGES OF HURRICANES TRT: 1:17
Images of storms and two recent hurricanes from the GOES-9 satellite.

ITEM #2: HURRICANE ERIN TRT: 41

ITEM #3: HURRICANE FELIX TRT: 1:26

NASA Television is broadcast on Spacenet 2, transponder 5, channel 9, C-Band, located at 69 degrees West longitude, with horizontal polarization. Frequency will be on 3880.0 megahertz, with audio on 6.8 megahertz.

-end-

News Release

National Aeronautics and
Space Administration

Washington, DC 20546
(202) 358-1600

For Release

August 24, 1995

Ed Campion
Headquarters, Washington, DC
(Phone: 202/358-1780)

Rob Navias
Johnson Space Center, Houston
(Phone: 713/483-5111)

NOTE TO EDITORS: N95-55

NASA MANAGERS TO BRIEF STATUS OF NEXT SPACE SHUTTLE MISSION

Shuttle managers will hold a press briefing at approximately 3:30 p.m. EDT Friday to discuss plans for launch of STS-69 following a Flight Readiness Review (FRR) being conducted to examine the status of the next Space Shuttle mission.

Managers will examine all open issues which have been worked in the Shuttle program since the formal FRR meeting for STS-69 was held on July 18, including the investigation into erosion seen on Space Shuttle solid rocket booster nozzle O-rings during the last two flights. The FRR, scheduled to begin at 1 p.m. EDT, is expected to last approximately two hours.

The briefing, with Tommy Holloway, Manager, Space Shuttle Program and Ron Dittemore, Manager, Space Shuttle Program Integration Office, will originate from the Johnson Space Center (JSC), Houston. NASA newsrooms at Headquarters, Washington, DC, Kennedy Space Center, FL, Marshall Space Flight Center, Huntsville, AL, and JSC, will be open to support the briefing. Reporters should call those newsrooms for a status on the time of the briefing, or watch NASA Television for updated information on the briefing status.

Two-way question and answer capability will be available to support the briefing from each of the four NASA locations. NASA Television is carried on Spacenet 2, transponder 5, Channel 9, C-Band, located at 69 degrees West longitude, horizontal polarization. Frequency is 3880 MHz, audio on 6.8 MHz.

-end-

NASA press releases and other information are available automatically by sending an Internet electronic mail message to domo@hq.nasa.gov. In the body of the message (not the subject line) users should type the words "subscribe press-release" (no quotes). The system will reply with a confirmation via E-mail of each subscription. A second automatic message will include additional information on the service. Questions should be directed to (202) 358-4043.

Video Advisory

National Aeronautics and
Space Administration

Washington, DC 20546
(202) 358-1600

For Release

Dwayne Brown
Headquarters, Washington, DC
(Phone: 202/358-1726)

August 24, 1995

VIDEO ADVISORY: V95-132

PREPARING FOR NEXT SPACE SHUTTLE LAUNCH ON NTV

On Friday NASA Television will air live footage of NASA's Kennedy Space Center personnel preparing Endeavour on Launch Pad 39A for the next Space Shuttle mission.

NASA Television video news files air at noon, 3, 6 and 9 p.m. EDT.

ITEM #1: ENDEAVOUR BEING PREPARED FOR LAUNCH TRT: tbd

NASA Television is broadcast on Spacenet 2, transponder 5, channel 9, C-Band, located at 69 degrees West longitude, with horizontal polarization. Frequency will be on 3880.0 megahertz, with audio on 6.8 megahertz.

-end-

News Release

National Aeronautics and
Space Administration

Washington, DC 20546
(202) 358-1600

For Release

August 24, 1995

Terri Hudkins
Headquarters, Washington, DC
(Phone: 202/358-1977)

Keith Koehler
Wallops Flight Facility, Wallops Island, VA
(Phone: 804/824-1579)

RELEASE: 95-144

NASA SCIENTIFIC BALLOONS CARRY FIRST STUDENT PAYLOADS

Yesterday, college students from Virginia and Pennsylvania realized their dream of flying scientific experiments to the edge of space on scientific balloons.

The first of two NASA scientific balloon missions carrying payloads designed and built by college students through the NASA Student Launch Program were conducted Wednesday from the Goddard Space Flight Center's Wallops Flight Facility, Wallops Island, VA.

The first balloon, launched at 2:26 p.m. EDT, Aug. 23, carried an upper atmospheric research payload for three participating universities in the Virginia Space Grant Consortium -- Old Dominion University, Norfolk, Hampton University, Hampton, and the College of William and Mary, Williamsburg. The 95-pound payload included a water-vapor density surveyor and an atmospheric sampling experiment.

The astronomy payload from the University of Pennsylvania, Philadelphia, was launched at 7:05 p.m. EDT. The 150-pound payload was developed to image star fields.

Both payloads flew on a 197,000 cubic-foot balloon. The Virginia payload reached an altitude of 96,500 feet and the Pennsylvania payload flew to an altitude of 90,800 feet.

At launch, the flight system, which includes a helium-filled balloon, the payload and a parachute, was approximately 200-feet long for the Virginia mission and 300-feet long for the Pennsylvania. After their ascent and flight, the payload and balloon began their descent for recovery.

-more-

The Virginia payload was recovered in good condition on Virginia's Eastern Shore about 10 miles southwest of the Wallops Flight Facility. The Pennsylvania payload landed in eastern Virginia near the Rappahannock River, east of Adler. Payload recovery is in progress.

The purpose of the NASA Student Launch Program, initiated in December 1993, is to provide undergraduate students with an opportunity to gain experience in all aspects of suborbital missions including planning, management, design, fabrication, payload testing, qualification and field operations associated with experiments for spaceflight.

The program provides students with the opportunity to participate in carrying out spaceflight experiments, increasing their awareness of the complex nature of such activities and stimulating continued interest in pursuing careers in engineering and science.

Through the Wallops Flight Facility, NASA provides the balloons, technical consultation and launch services. The participating institutions are responsible for funding the payload hardware and related activities. In addition, the universities receive technical assistance from industry and other NASA centers.

The suborbital program offers students an opportunity to see projects through from inception to launch in a relatively short time. Two sounding rocket missions under this program are scheduled for 1996. They will carry experiments for the Colorado Space Grant Consortium and the University of Cincinnati.

The Student Launch Program is sponsored by the Office of Space Science, the Office of Human Resources and Education, and the Office of Equal Opportunity Programs at NASA Headquarters, Washington, DC.

-end-

NASA press releases and other information are available automatically by sending an Internet electronic mail message to domo@hq.nasa.gov. In the body of the message (not the subject line) users should type the words "subscribe press-release" (no quotes). The system will reply with a confirmation via E-mail of each subscription. A second automatic message will include additional information on the service. Questions should be directed to (202) 358-4043.

News Release

National Aeronautics and
Space Administration

Washington, DC 20546
(202) 358-1600

For Release

August 25, 1995

Ed Campion
Headquarters, Washington, DC
(Phone: 202/358-1780)

Bruce Buckingham
Kennedy Space Center, FL
(Phone: 407/867-2468)

NOTE TO EDITORS: 95-56

NASA SETS AUGUST 31 AS LAUNCH DATE FOR MISSION STS-69

NASA managers today set Thursday, Aug. 31, 1995, as the official launch date for Space Shuttle Endeavour on Mission STS-69. Major events planned for the flight include deployment and retrieval of two free-flying payloads and a six-hour spacewalk to evaluate assembly techniques for the international Space Station.

The launch date decision came after NASA officials held a Flight Readiness Review to consider remaining issues in preparing Endeavour for the flight. Among the items reviewed and closed out was the issue of minor O-ring erosion seen in a joint of the Reusable Solid Rocket Motor (RSRM) nozzle during the last two Shuttle launches.

"In late July we decided to delay Endeavour's launch," said Space Shuttle Director Bryan O'Connor. "I believe that was the right thing to do so that we could better understand the anomaly seen with the RSRM nozzle joints. Over the last four weeks, this issue has been worked by NASA Shuttle, safety, and independent assessment teams. All parties involved in this effort agree that we now understand what was causing the anomaly and that proper procedures have been established to resolve this issue. The process we've gone through demonstrates once again that flying safely remains our number one priority in the Shuttle program."

Launch of Endeavour Thursday is set for 11:04 a.m. EDT at the opening of a 2-1/2 hour launch window. The planned mission duration is 11 days. The mission is scheduled to conclude with a landing at Kennedy Space Center's Shuttle Landing Facility on Sept. 11 at approximately 7:30 a.m. EDT.

- end -

NASA press releases and other information are available automatically by sending an Internet electronic mail message to domo@hq.nasa.gov. In the body of the message (not the subject line) users should type the words "subscribe press-release" (no quotes). The system will reply with a confirmation via E-mail of each subscription. A second automatic message will include additional information on the service. Questions should be directed to (202) 358-4043.

Video Advisory

National Aeronautics and
Space Administration

Washington, DC 20546
(202) 358-1600

For Release

Dwayne Brown
Headquarters, Washington, DC
(Phone: 202/358-1726)

August 27, 1995

VIDEO ADVISORY: V95-133

HUBBLE SPACE TELESCOPE AND STS-69 CREW ON NTV MONDAY

NASA Television will air two images, from NASA's Hubble Space Telescope, which may be used by astronomers to eventually refine age estimates of the universe. NTV also will air footage of the crew of NASA's next Space Shuttle mission.

Astronomers peering deep into the galaxy, have discovered a large number of "Stellar Corpses", called white dwarf or burned out stars from observations so sensitive that finding even the brightest of these stars was equivalent to looking from Earth for a 100-watt light bulb on the Moon (239,000 miles). The Hubble image that will be on the left is a view of globular cluster M4, the nearest cluster to the Earth. The image on the right is a small portion of the cluster revealing eight white dwarf stars.

NTV also will air interviews of the commander and pilot in addition to the arrival of the entire crew of NASA's next Space Shuttle flight, Endeavour on STS-69. The mission will include deployment and retrieval of two free-flying payloads and a six-hour spacewalk to evaluate assembly techniques for the international Space Station.

NASA Television video news files air at noon, 3, 6 and 9 p.m. EDT.

ITEM #1 HUBBLE SPACE TELESCOPE FINDS WHITE DWARFS TRT: tbd
The image on the left is a view of the nearest cluster to the Earth.
On the right is a small portion of the cluster showing eight white dwarf stars (inside blue circles).

ITEM #2 Interview-David M. Walker STS-69 Mission Commander TRT: tbd
Walker became an astronaut in 1979. He was a pilot on STS-51A and mission commander on STS-30 and STS-53. A native of Eustis, FL., he is 51 years old.

ITEM #3 Interview-Kenneth D. Cockrell STS-69 Pilot TRT: tbd
Cockrell became an astronaut in 1991. He flew as mission specialist on STS-56. A native of Austin, TX, Cockrell is 45 years old.

ITEM #4 STS-69 Crew Arrival TRT: tbd
Live coverage of the arrival of the STS-69 crew at Kennedy Space Center in preparation for launch on Thursday.

-more-

ITEM #5 Space Shuttle Columbia Roll-out **TRT: tbd**
The Space Shuttle Columbia rolls out to Launch Pad 39B at the Kennedy Space Center for NASA's next mission following STS-69.

-end-

NASA Television is broadcast on Spacenet 2, transponder 5, channel 9, C-Band, located at 69 degrees West longitude, with horizontal polarization. Frequency will be on 3880.0 megahertz, with audio on 6.8 megahertz.

News Release

National Aeronautics and
Space Administration

Washington, DC 20546
(202) 358-1600

Ed Campion
Headquarters, Washington, DC
(Phone: 202/358-1778)

Lisa Malone
Kennedy Space Center, FL
(Phone: 407/867-2468)

For Release
August 28, 1995

NOTE TO EDITORS: N95-57

STS-69 COUNTDOWN BRIEFINGS/LAUNCH COVERAGE - AUGUST 28-31

A series of briefings will be held this week at NASA's Kennedy Space Center, FL, in connection with the upcoming launch of the Space Shuttle Endeavour on mission STS-69. Launch is scheduled for Thursday, August 31, at 11:04 a.m. EDT.

Beginning today, daily countdown status briefings will be held to update news media on final processing activities for launch. A pre-launch news conference with NASA senior managers will be held at 10:00 a.m. EDT on August 30 to discuss STS-69 mission readiness and objectives. Also, NASA TV will replay the STS-69 pre-flight briefings that were held at the Johnson Space Center, Houston, on July 10th and 12th.

Daily news video feeds will continue at their regularly scheduled release time of noon EDT. Video advisories on the content of each day's feed also will be issued.

Attached is a listing of the times, subjects and participants for each of the scheduled briefings. Also noted on the schedule are key STS-69 pre-launch activities and NASA TV replays.

- end -

NASA press releases and other information are available automatically by sending an Internet electronic mail message to domo@hq.nasa.gov. In the body of the message (not the subject line) users should type the words "subscribe press-release" (no quotes). The system will reply with a confirmation via E-mail of each subscription. A second automatic message will include additional information on the service. Questions should be directed to (202) 358-4043.

STS-69 PAO PRE-FLIGHT BRIEFINGS & EVENTS

(Based on August 31, 1995 launch)

****

LAUNCH - 3 DAYS - Monday, August 28, 1995

9:00 a.m. **Countdown Status**
Moderator: KSC PIO
Briefers: Bill Dowdell, Shuttle Test Director
Lesa Roe, KSC STS-69 Payload Manager
Ed Priselac, Shuttle Weather Officer

12:30 p.m. **STS-69 Crew Arrival at KSC SLF**

3:00 p.m. **Begin STS-69 launch countdown**

****

LAUNCH - 2 DAYS - Tuesday, August 29, 1995

9:00 a.m. **Countdown Status**
Moderator: KSC PIO
Briefers: Steve Altemus, NASA Test Director
Lesa Roe, KSC STS-69 Payload Manager
Ed Priselac, Shuttle Weather Officer

Noon **Video News File**

****

LAUNCH - 1 DAY - Wednesday, August 30, 1995

10:00 a.m. **Pre-Launch Press Conference***
Moderator: Lisa Malone
Briefers: Tommy Holloway, Space Shuttle Program Manager, JSC
Gregory Reck, Deputy Associate Administrator, Office of Space Access and Technology, NASA Headquarters
Dr. George Withbrow, Director, Space Physics Division, Office of Space Science, NASA Headquaters
Bob Sieck, Director, Shuttle Management & Operations, KSC
Capt. David Biggar, KSC Staff Weather Liason

Noon **Video News File**

1:00 p.m. ***Replay of STS-69 Pre-Flight Briefings***

****

LAUNCH DAY - Thursday, August 31, 1995

6:00 a.m. **Begin STS-69 Launch Countdown Television Coverage**

11:04 a.m. **Launch of Space Shuttle Endeavour**

****

All times listed are EDT

Video Advisory

National Aeronautics and
Space Administration

Washington, DC 20546
(202) 358-1600

For Release

August 28, 1995

David E. Steitz
Headquarters, Washington, DC
(Phone: 202/358-1730)
VIDEO ADVISORY: V95-134

ZEOLITE SOIL, TOPEX-POSEIDON, UPCOMING MISSION HIGHLIGHTS

A feature and interview highlighting Zeolite Soil, a synthetic soil system with the capability of time-releasing nutrients will open Tuesday's NASA TV news file. A piece on scientists study the effects of smoke on clouds from forest and grassland fires in Brazil will be shown. Features on the TOPEX-Poseidon satellite, which studies the Earth's oceans and winds will be aired. A recent Hubble Space Telescope image of "white dwarfs" will be replayed, followed by training footage and interviews with crew members of the upcoming STS-69 Space Shuttle mission, set for launch this Thursday. *NASA Television video news files air at noon, 3, 6 and 9 p.m. EDT.*

ITEM #1: ZEOLITE SOIL
Synthetic soil system can time-release nutrients to plants.
ITEM #2: INTERVIEW -- DOUG MING, DEVELOPER OF ZEOLITE SOIL MIX
Soil mix developer discusses use of Zeolite mix for Earth and space applications.
ITEM #3: SCIENTISTS STUDY ATMOSPHERIC EFFECTS OF SMOKE, CLOUDS
Aerosols from smoke can affect clouds and thus the Earth's atmosphere. Brazil forest fires and grasslands to be studied this month.
ITEM #4: INTERVIEW -- PROJECT MANAGER DAVE MCDOUGAL
Smoke, Clouds and Radiation - Brazil (SCAR-B) Project Manager discusses program.
ITEM #5: TOPEX-POSEIDON GREATEST HITS
Spaceborne imagery from the TOPEX-Poseidon satellite. Interview with Lee-Leung Fu. Fu discusses the TOPEX studies of El Nino from 1994 and 1995. Interview with Anthony Bussilachi explains what El Nino is and its effects agriculture.
ITEM #6: REPLAY -- HUBBLE SPACE TELESCOPE FINDS WHITE DWARFS
ITEM #7: SURVIVAL TRAINING OF STS-69 CREW
Upcoming Shuttle crew practice survival training.
ITEM #8: SPARTAN TRAINING
Astronauts train in Houston for space walks during upcoming mission.
ITEM #9: INTERVIEW --JAMES VOSS, STS-69 PAYLOAD COMMANDER
ITEM #10: INTERVIEW -- MICHAEL GERNHARDT, STS-69 MISSION SPECIALIST
ITEM #11: INTERVIEW -- JAMES H. NEWMAN, STS-69 MISSION SPECIALIST

-end-

NASA Television is broadcast on Spacenet 2, transponder 5, channel 9, C-Band, located at 69 degrees West longitude, with horizontal polarization. Frequency will be on 3880.0 megahertz, with audio on 6.8 megahertz.

News Release

National Aeronautics and
Space Administration

Washington, DC 20546
(202) 358-1600

For Release

Michael Braukus
Headquarters, Washington, DC
(Phone: 202/358-1979)

August 28, 1995

Lisa Malone
Kennedy Space Center, FL
(Phone: 407/867-2468)

RELEASE: 95-145

STUDY SHOWS FEASIBILITY OF PLANT-BASED LIFE SUPPORT SYSTEMS

The science fiction concept of plants providing a complete life support system for the crews of lunar and deep-space missions came a step closer to reality with the successful completion of a NASA life sciences experiment that studied potato production in a self-contained environment.

"We have demonstrated that a bioregenerative life support system really can support humans in an enclosed environment over a long period of time," said Kennedy Space Center (KSC) plant physiologist Dr. Gary Stutte. "Our long-range goal is to prove that a plant-based life support system is as reliable as the mechanical systems found in today's spacecraft."

KSC scientists conducted a successful 418-day experiment in the Biomass Production Chamber of the Controlled Environment Life Support System. The experiment investigated how well a biogenerative life support system can perform on a continuous basis over an extended period of time. This experiment was the longest test of a major component of a bioregenerative life support system ever completed.

During the experiment, the potato plants produced enough oxygen to support one crew member on a continuous basis, while also removing excess carbon dioxide from the atmosphere, Stutte said. In addition, the potato crops produced enough food to supply 55 percent of the caloric needs of an astronaut, along with enough purified water for a total of four crew members. A larger chamber could be used to provide all the consumables for the crew for as long as a mission might last, Stutte said.

-more-

"The major advantage of the bioregenerative life support system is that it does not need to be resupplied with food, water and air, nor does it require expendable water or air filtration systems as present-day mechanical spacecraft life support systems do," said Dr. Bill Knott, chief scientist of Biological Programs for the NASA/KSC Biomedical Operations Office. Instead, the current system recycles plant waste and nutrients. This recycled material sustains the plant crops, which in turn produce the oxygen, water and food that the crew would need for an indefinite period of time.

Once the analyses of the KSC experiments are complete, they will be provided to NASA's Johnson Space Center (JSC) Houston, Knott said. JSC research personnel will then use this data to conduct research on the effectiveness of bioregenerative life support systems with human subjects.

"We have been supplying this kind of information since we first began growing crops at KSC in 1987," Knott said. "Some of our data was used in preparing a recent JSC experiment where a British chemist was supplied with all of his oxygen and carbon dioxide removal requirements in a sealed chamber for 15 days by a crop of 30,000 wheat plants."

Because of the success KSC has had with potatoes, this crop will make up 75 percent of the food for the next bioregenerative life support system experiment, Stutte said. Wheat will make up the remaining 25 percent of the crop during the two-year study that will begin in January 1996. "We feel that a mixed crop is needed to optimize system production," Stutte said. "Potatoes provide the highest yield, but wheat is more tolerant to longer light cycles that might be used in the chamber."

The planned longer studies also will provide more data on the ability of the bioregenerative life support systems to operate over an expected three-year mission to Mars. "We feel that we can keep this system going indefinitely," Knott summed up. "There is no reason to believe we can't."

- end -

NASA press releases and other information are available automatically by sending an Internet electronic mail message to domo@hq.nasa.gov. In the body of the message (not the subject line) users should type the words "subscribe press-release" (no quotes). The system will reply with a confirmation via E-mail of each subscription. A second automatic message will include additional information on the service. Questions should be directed to (202) 358-4043.

Video Advisory

National Aeronautics and
Space Administration

Washington, DC 20546
(202) 358-1600

For Release

August 29, 1995

David E. Steitz
Headquarters, Washington, DC
(Phone: 202/358-1730)
VIDEO ADVISORY: V95-135

ZEOLITE SOIL, TOPEX/POSEIDON, UPCOMING MISSION HIGHLIGHTS

NASA TV will replay a feature and interview highlighting Zeolite Soil, a synthetic soil system with the capability of time-releasing nutrients as the opening of Wednesday's news file. A piece on scientists study the effects of smoke on clouds from forest and grassland fires in Brazil will be shown. Features on the TOPEX/Poseidon satellite, which studies the Earth's oceans and winds will be replayed. A recent Hubble Space Telescope image of "white dwarfs" will be replayed, followed by animation, training footage and interviews with crew members of the upcoming STS-69 Space Shuttle mission, set for launch this Thursday. *NASA Television video news files air at noon, 3, 6 and 9 p.m. EDT.*

ITEM #1: REPLAY -- ZEOLITE SOIL
ITEM #2: REPLAY -- INTERVIEW -- DOUG MING, DEVELOPER, ZEOLITE SOIL MIX
ITEM #3: REPLAY -- SCAR-B PROJECT AND THE ENVIRONMENT
ITEM #4: REPLAY -- INTERVIEW -- PROJECT MANAGER DAVE MCDOUGAL
ITEM #5: REPLAY -- TOPEX/POSEIDON GREATEST HITS
ITEM #6: REPLAY -- HUBBLE SPACE TELESCOPE FINDS WHITE DWARFS

ITEM #7: SPARTAN ASTRONOMY SATELLITE ON NEXT MISSION
Overview of Spartan 201 astronomy satellite that will be a primary payload on STS-69.

ITEM #8: REPLAY -- SURVIVAL TRAINING OF STS-69 CREW
ITEM #9: REPLAY -- SPARTAN MISSION TRAINING
ITEM #10: INTERVIEW -- JAMES VOSS, STS-69 PAYLOAD COMMANDER
ITEM #11: INTERVIEW -- MICHAEL GERNHARDT, STS-69 MISSION SPECIALIST
ITEM #12: INTERVIEW -- JAMES H. NEWMAN, STS-69 MISSION SPECIALIST
ITEM #13: INTERVIEW -- DAVID M. WALKER, STS-69 MISSION COMMANDER
ITEM #14: INTERVIEW -- KENNETH D. COCKRELL, STS-69 PILOT

-end-

NASA Television is broadcast on Spacenet 2, transponder 5, channel 9, C-Band, located at 69 degrees West longitude, with horizontal polarization. Frequency will be on 3880.0 megahertz, with audio on 6.8 megahertz.

News Release

National Aeronautics and
Space Administration

Washington, DC 20546
(202) 358-1600

For Release

Brian Dunbar
Headquarters, Washington, DC
(Phone: 202/358-1547)

August 29, 1995

Mary Hardin
Jet Propulsion Laboratory, Pasadena, CA
(Phone: 818/354-5011)

RELEASE: 95-146

TOPEX/POSEIDON COMPLETES PRIME MISSION

TOPEX/Poseidon, the U.S./French ocean-observing satellite, has successfully completed its three-year primary mission to help scientists understand how the Earth's oceans affect our climate.

Having passed the third anniversary of its launch on Aug. 10, 1992, TOPEX/Poseidon has begun its extended mission. Given the health of the spacecraft, the project management team believes TOPEX/Poseidon will continue to operate at least four more years.

TOPEX/Poseidon's primary science goal is to improve understanding of how oceans circulate. The satellite information is enabling oceanographers to study the way the oceans transport heat and nutrients and how the oceans interact with weather patterns.

"The extended mission will help us further achieve TOPEX/Poseidon's primary science goal which is to improve our knowledge of how oceans circulate," said Dr. Lee-Lueng Fu, TOPEX/Poseidon project scientist at the Jet Propulsion Laboratory (JPL), Pasadena, CA. "We are interested in answering questions about long-term variations in the ocean and understanding what role the oceans play in long-term global change."

TOPEX/Poseidon, a joint mission between NASA and the Centre Nationale d'Etudes Spatiales (CNES), the French space agency, uses a radar altimeter to precisely measure sea-surface height. Scientists use the TOPEX/Poseidon data to produce global maps of ocean circulation. The satellite has provided oceanographers with unprecedented global sea level measurements that are accurate to less than two inches.

- more -

The spacecraft was launched from the Arianespace Guiana Space Center in Kourou, French Guiana by an Ariane 42P booster rocket procurred by CNES. It was the first NASA satellite launched by Arianespace.

In its more than 14,000 orbits of Earth since launch, the satellite has obtained the following scientific results:

• In early 1995, TOPEX/Poseidon detected a new El Niño condition in the equatorial Pacific Ocean. This condition has been linked to the unusually rainy weather in California and the unseasonably warm winter in the Northeast U.S.

• Preliminary results using data acquired from December 1992 to September 1994 indicate a global rise in sea level of 0.12 inches per year. By tracking sea level over the extended mission, TOPEX/Poseidon will help scientists understand whether this rise is a short-term variation or part of a long-term trend.

• In 1994, TOPEX/Poseidon data helped scientists understand that the climatic effects caused by the El Niño phenomenon are much longer lived than previously thought. TOPEX/Poseidon data tracked residual effects from the El Niños of 1982-83, 1986-87 and 1991-1993.

• In the Gulf of Mexico, data are helping scientists and a U.S. oil company study ocean-circulation phenomena, called eddies, that can disrupt off-shore oil drilling.

• In another application, the precision of the satellite's ocean measurements has enabled scientists to calculate global tides across all the open oceans, an important step toward monitoring global ocean circulation from space and understanding the complexities of global climate change.

"The data set from the prime mission significantly exceeds all pre-launch expectations and has provided oceanographers with their first global data set on the Earth's oceans," said Charles Yamarone, the JPL TOPEX/Poseidon project manager. "The satellite is healthy and its critical components are performing at or above expectations, which would allow for more than seven years of flight operations."

More than 1,400 data images are available through JPL's public access computer site via anonymous file transfer protocol (ftp) at the address jplinfo.jpl.nasa.gov. TOPEX/Poseidon data are also available via Internet and the World Wide Web at the address http://www.jpl.nasa.gov, or by dial-up modem to the telephone number 818/354-1333.

TOPEX/Poseidon is part of NASA's Mission to Planet Earth, a coordinated, long-term research program to study the Earth as a single global environment. JPL manages the U.S. portion of the mission for NASA's Office of Mission to Planet Earth.

- end -

News Release

National Aeronautics and
Space Administration

Washington, DC 20546
(202) 358-1600

For Release

Douglas Isbell
Headquarters, Washington, DC
(Phone: 202/358-1753)

August 29, 1995

James H. Wilson
Jet Propulsion Laboratory, Pasadena, CA
(Phone: 818/354-5011)

RELEASE: 95-147

GALILEO FLYING THROUGH INTENSE DUST STORM

NASA's Galileo spacecraft is plowing through the most intense interplanetary dust storm ever measured as it closes in on Jupiter after a six-year journey to reach the giant planet, scientists report.

This is the latest and greatest of several large dust storms encountered by Galileo since December 1994, when the spacecraft was still almost 110 million miles from Jupiter. The current storm has lasted more than three weeks. The spacecraft, launched in October 1989, is now about 39 million miles from the planet. Galileo will enter orbit around Jupiter December 7, 1995.

During the current dust storm, Galileo has counted up to 20,000 dust particles per day, compared to the normal interplanetary rate of about one particle every three days, said Dr. Eberhard Grun, principal investigator on the spacecraft's dust detector experiment.

The particles, scientists say, are apparently emanating from somewhere in the Jovian system and may be the product of volcanoes on Jupiter's moon, Io, or could be coming from Jupiter's faint two-ring system. The dust particles, probably no larger than those found in cigarette smoke, may also be leftover material from Comet Shoemaker-Levy 9, which impacted Jupiter last year.

Scientists believe the particles are electrically charged and then accelerated by Jupiter's powerful magnetic field. They have calculated that the dust is speeding through interplanetary space at velocities ranging from 90,000 to 450,000 miles per hour, depending on particle size. Even at such high speeds, these tiny particles pose no danger to the Galileo spacecraft, scientists say.

-more-

Galileo's dust detector, one of 10 science instruments on the spacecraft, is about the size of a large kitchen colander. It counts particle impacts and observes their direction and energy. From these measurements scientists can estimate particle size and speed.

Grun, a scientist at the Max-Planck Institute for Nuclear Physics, Heidelberg, Germany, also has dust detectors aboard the Ulysses spacecraft that flew by Jupiter in 1992 on its way to study the Sun, and on the Cassini spacecraft scheduled for launch to Saturn in 1997. His team first discovered dust emanating from Jupiter in 1992 using the Ulysses instrument.

The Galileo instrument first observed dust coming from Jupiter in June 1994. Although both Ulysses and Galileo were able to show that the dust storms seem to come from Jupiter, the intensity and timing of the recent storms seen by Galileo differ from those detected by Ulysses.

Chances of understanding the nature of these dust storms are improving since, after the onset of the current storm, Galileo flight engineers commanded the spacecraft to collect and transmit dust data as often as three times a day, according to Dr. Carol Polanskey, team chief for the dust instrument subsystem at NASA's Jet Propulsion Laboratory (JPL), Pasadena, CA. The normal collection rate had been twice per week.

In addition, the instrument was reprogrammed in July 1994, "to take advantage of the knowledge gained from the Ulysses experience and just in time to observe the start of the series of storms Galileo has seen," said Polanskey. The reprogramming also endowed the instrument with new data compression and other improvements, she added.

"This puts us in an excellent position to view the dust phenomena as Galileo moves toward Jupiter," she said. "We're looking forward to determining the source of the dust storms once we get into the Jovian system."

When Galileo arrives at Jupiter this December, it will receive and relay the data from the atmospheric probe that was targeted toward Jupiter and separated from the main spacecraft in July. Galileo will then begin a two-year, 11-orbit survey of Jupiter, its satellites, magnetosphere and the dust environment.

JPL manages the Galileo project for NASA's Office of Space Science. Germany is a scientific and engineering partner in Galileo. JPL also manages the U.S. portion of the Ulysses project, a joint effort of NASA and the European Space Agency.

-end-

NASA press releases and other information are available automatically by sending an Internet electronic mail message to domo@hq.nasa.gov. In the body of the message (not the subject line) users should type the words "subscribe press-release" (no quotes). The system will reply with a confirmation via E-mail of each subscription. A second automatic message will include additional information on the service. Questions should be directed to (202) 358-4043.

News Release

National Aeronautics and
Space Administration

Washington, DC 20546
(202) 358-1600

Don Savage
Headquarters, Washington, DC
(Phone: 202/358-1547)

For Release
August 29, 1995

Diane Farrar
Ames Research Center, Mountain View, CA
(Phone: 415/604-3934)

RELEASE: 95-148

SCIENTISTS DISCOVER FIRST NATURAL LASER IN SPACE

The first "natural" laser in space was detected by scientists on board NASA's Kuiper Airborne Observatory (KAO) as they trained the aircraft's infrared telescope on a young, very hot, luminous star in the constellation Cygnus.

Discovery of this naturally occurring laser provides scientists with a powerful tool for probing the conditions in disks of gas and dust surrounding young stars, according to Principal Investigator Vladimir Strelnitski of the Astrophysics Laboratory, National Air and Space Museum (NASM), Washington, DC, who made the discovery. Scientists believe that many of these circumsteller disks are regions where planets are forming.

The laser is created as intense ultraviolet light from the star "pumps" or excites the densely packed hydrogen atoms in the gaseous, dusty disk surrounding the star. Then, when the infrared light shines on the excited hydrogen atoms, it causes the atoms to emit an intense beam of light at exactly the same wavelength, creating the circumstellar laser, according to Sean W. J. Colgan of the Search for Extraterrestrial Intelligence (SETI) Institute, Mountain View, CA, a co-investigator in the discovery.

The discovery was made as the KAO, the world's only flying observatory, returned to Moffett Field, CA, from observing missions based in Hawaii. Co-investigators in the discovery are Howard A. Smith, also of NASM; Michael R. Haas and Edwin F. Erickson, Ames Research Center, Mountain View, CA; and Colgan.

Strelnitski used a sensitive liquid helium-cooled spectrometer attached to the KAO telescope to search for selected "lasing lines" in the infrared region of the spectrum between 50-500 microns (100 to 1000 times the wavelength of visible light).

The natural laser was detected at 169 microns as the scientists viewed the nearly edge-on gas and dust disk surrounding the peculiar star known as MWC 349. The "lasing line" has an intensity six times brighter than non-amplified spontaneous emissions at the same wavelength, Strelnitski said.

-more-

The existence of natural lasers was predicted more than 15 years ago, following the successful amplification of both microwave and visible light wavelengths in laboratory experiments, and the discovery of amplified microwaves in space.

American physicist and nobel laureate Charles Townes first proposed the practical amplification of electromagnetic radiation by stimulated emission in 1951. In 1954, his group at Columbia University created the first laboratory amplifier of microwaves, calling it a MASER (Microwave Amplification by the Stimulated Emission of Radiation.)

In 1960 Theodore Maiman at Hughes Research Laboratories developed a device to amplify visible light, creating the first LASER (Light Amplification by Stimulated Emission of Radiation.)

Not long after the invention of laboratory masers and lasers, the first natural masers were discovered in interstellar and circumstellar gas clouds. Townes, a frequent investigator onboard the KAO, was among the discoverers of the first strong astrophysical water masers.

Astrophysical masers, due to their extremely high intensity and spectral purity, are valuable tools in studies of the birth and death of their associated stars. On Earth, many scientific and industrial applications of masers and lasers have been developed, such as keeping exact time, bar-code reading in supermarkets and performing "bloodless surgery."

Astrophysical masers can be observed from the ground with special instruments, but the major part of the infrared spectrum where potential lasers might be seen is hidden from the ground observer by Earth's absorbing atmosphere.

This long awaited discovery of a natural laser was made on the last scheduled flight of the KAO instrument -- the Ames Cryogenic Grating Spectrometer. The instrument permits sensitive detection of emission from atoms and molecules throughout the mid- and far-infrared spectral domain.

The KAO is scheduled for retirement this fall. NASA plans to begin development of the follow-on airborne observatory SOFIA in 1996, with first flight scheduled for the year 2000.

- end -

NASA press releases and other information are available automatically by sending an Internet electronic mail message to domo@hq.nasa.gov. In the body of the message (not the subject line) users should type the words "subscribe press-release" (no quotes). The system will reply with a confirmation via E-mail of each subscription. A second automatic message will include additional information on the service. Questions should be directed to (202) 358-4043.

Video Advisory

National Aeronautics and
Space Administration
Washington, DC 20546
(202) 358-1600

For Release

August 30, 1995

David E. Steitz
Headquarters, Washington, DC
(Phone: 202/358-1730)
VIDEO ADVISORY: V95-136

SHUTTLE ENDEAVOUR LAUNCH ON NTV THURSDAY

NASA TV will carry live coverage of the launch of Space Shuttle Endeavour, due to lift off from the Kennedy Space Center, FL, at 11:04 a.m. EDT. Endeavour will be on an 11 day mission during which the Shuttle will deploy and retrieve the Wake Shield Facility and the Spartan 201 free-flyer. The Wake Shield Facility is a 12 foot diameter, stainless steel disk that will create an "ultra-vacuum" environment in space within which thin semiconductor films for next-generation advanced electronics will be grown. The Spartan 201 will investigate the interaction between the Sun and its outflowing wind of charged particles. NASA TV will provide continuous coverage of Endeavour's flight through landing, currently scheduled for 7:33 a.m. EDT Monday, September 11 at Kennedy. *NASA Television video news files air at noon, 3, 6 and 9 p.m. EDT.*

11:04 a.m. **LAUNCH**

12 p.m. **POST LAUNCH PRESS CONFERENCE**

2:30 p.m. **MISSION UPDATE**

7 p.m. **FLIGHT DAY VIDEO FILE**

During STS-69, mission information also may be accessed via the Internet and the World Wide Web at the following URL:

http://shuttle.nasa.gov

The Shuttle mission home pages are designed to give visitors the opportunity to experience a Space Shuttle mission through access to detailed, up-to-the-minute multimedia information during each flight.

Media may obtain mission updates by contacting the following NASA Newsrooms:

During mission	Johnson Space Center, Houston	713/483-5111
Shuttle launch and landing	Kennedy Space Center, FL	407/867-2468

NASA Television is broadcast on Spacenet 2, transponder 5, channel 9, C-Band, located at 69 degrees West longitude, with horizontal polarization. Frequency will be on 3880.0 megahertz, with audio on 6.8 megahertz.

-end-

News Release

National Aeronautics and
Space Administration

Washington, DC 20546
(202) 358-1600

Don Nolan-Proxmire
Headquarters, Washington, DC
(Phone: 202/358-4727)

J. D. Hunley
Dryden Flight Research Center, Edwards, CA
(Phone: 805/258-3447)

For Release
August 30, 1995

RELEASE: 95-149

NASA ACHIEVES FIRST PROPULSION-CONTROLLED LANDING OF A TRANSPORT AIRCRAFT

Using only engine power for control, NASA research pilot and former astronaut Gordon Fullerton landed a McDonnell-Douglas MD-11 transport aircraft yesterday at NASA's Dryden Flight Research Center, Edwards, CA.

The milestone flight was part of a NASA project to develop a computer-assisted engine control system that enables a pilot to land a plane safely when its normal control surfaces are disabled.

Following several incidents in which hydraulic failures resulted in loss of part or all of their flight controls, notably the crash of a United Airlines DC-10 at Sioux City, IA, in 1989, NASA started developing a propulsion-controlled aircraft (PCA) system in which engine thrust provides the control needed to land an aircraft safely.

Gordon Fullerton had previously landed a NASA F-15 research aircraft using a similar PCA system in April 1993. The landing today was the first one ever performed in an actual transport aircraft--the wide body MD-11 that replaced the earlier DC-10.

The success of the program was the result of a partnership between NASA and McDonnell Douglas Aerospace, St. Louis, MO, with Pratt & Whitney and Honeywell designing the software used in the aircraft's flight control computer.

-more-

Following an earlier flight at Yuma, AZ, in which the MD-11 did not land, a combined crew including Gordon Fullerton and Douglas Aircraft's flight test team headed by pilot John Miller, made three practice approaches at Dryden before making the initial landing at 11:38 a.m. PDT, August 29. They then took off again and made a second landing at 12:18 p.m., proving that the PCA concept was feasible for a commercial transport.

The PCA system uses standard auto pilot controls already present in the cockpit, together with the new programming in the aircraft's flight control computers. The PCA concept is simple--for pitch control, the program increases thrust to climb and reduces thrust to descend. To turn right, the auto pilot increases the left engine thrust while decreasing the right engine thrust. Since thrust response is slow, and the control forces are relatively small, a pilot would require extensive practice and intense concentration to do this task manually. Using computer-controlled thrust greatly improves flight precision and reduces pilot workload.

-end-

EDITOR'S NOTE: Media representatives wishing to obtain images accompanying this release may call the Dryden Flight Research Center at 805/205-3461 or the NASA Headquarters Newsroom Photo Office at 202/358-1900.

NASA press releases and other information are available automatically by sending an Internet electronic mail message to domo@hq.nasa.gov. In the body of the message (not the subject line) users should type the words "subscribe press-release" (no quotes). The system will reply with a confirmation via E-mail of each subscription. A second automatic message will include additional information on the service. Questions should be directed to (202) 358-4043.

Video Advisory

National Aeronautics and
Space Administration

Washington, DC 20546
(202) 358-1600

For Release

August 31, 1995

David E. Steitz
Headquarters, Washington, DC
(Phone: 202/358-1730)

VIDEO ADVISORY: V95-137

PROPULSION-CONTROLLED LANDING ON NTV FRIDAY

On Friday NASA TV will replay highlights from Thursday's Space Shuttle Endeavour launch postponement press conference, and then air footage and interviews showing the first propulsion controlled landing of an MD-11 transport aircraft. The MD-11 landed at NASA's Dryden Flight Research Center on August 29 using only engine power for control of the aircraft. The propulsion-controlled landing is part of NASA's research into developing a computer-assisted engine control system that enables a pilot to land a plane safely when it's normal control surfaces, such as elevators, rudders and ailerons, are disabled. Following several incidents in which hydraulic failures resulted in loss or flight controls (most notably the crash of a DC-10 at Sioux City, Iowa in 1989) NASA started developing the propulsion controlled aircraft system. *NASA Television video news files air at noon, 3, 6 and 9 p.m. EDT.*

ITEM #1: LAUNCH POSTPONEMENT PRESS CONFERENCE HIGHLIGHTS
Excerpts from Thursday's launch postponement briefing at the Kennedy Space Center, FL.

ITEM #2: NASA ACHIEVES FIRST PROPULSION-CONTROLLED LANDING
Footage of MD-11 landing using only engine propulsion.

ITEM #3: INTERVIEW WITH GORDON FULLERTON
Fullerton, who piloted the landing of the MD-11, explains what propulsion controlled aircraft is and how well the test landing went.

ITEM #4: INTERVIEW WITH BILL BURCHAM
Burcham explains that the program is ahead of schedule and below cost

ITEM #5: INTERVIEW WITH BOB BARRON
Barron explains the benefits of using the new control system.

NASA Television is broadcast on Spacenet 2, transponder 5, channel 9, C-Band, located at 69 degrees West longitude, with horizontal polarization. Frequency will be on 3880.0 megahertz, with audio on 6.8 megahertz.

-end-

News Release

National Aeronautics and
Space Administration

Washington, DC 20546
(202) 358-1600

For Release

Brian Dunbar
Headquarters, Washington, DC
(Phone: 202/358-0873)

September 1, 1995

George H. Diller
Kennedy Space Center, FL
(Phone: 407/867-2468)

Lynn Blenkhorn
Canadian Space Agency
(Phone: 514/926-4349)

Pat Viets
NOAA, Suitland, MD
(Phone: 301/457-5005)

NOTE TO EDITORS: N95-58

RADARSAT SPACECRAFT TO BE LAUNCHED ABOARD DELTA ROCKET

The Canadian Space Agency's RADARSAT spacecraft is scheduled to be launched aboard a McDonnell Douglas Delta II rocket from NASA's Space Launch Complex 2 at Vandenberg Air Force Base, CA, on Oct. 4 at 7:22 a.m. PDT.

On Sept. 6, NASA Headquarters will host the RADARSAT Mission Science Briefing to outline the mission for reporters. The briefing is scheduled to begin at 1:30 p.m. EDT in the auditorium at the NASA Headquarters Building, 300 E St. SW, Washington, DC. Representatives of all participating agencies will be available to discuss the RADARSAT mission.

Canadian media desiring to cover the launch at Vandenberg Air Force Base may begin faxing accreditation requests to the Canadian Space Agency at:

Canadian Space Agency, Attn: Lynn Blenkhorn
Telephone: 514/926-4349
FAX: 514/926-4352

The deadline for Canadian media to apply for press credentials to cover a launch on Oct. 4 is Sept. 8.

-more-

U.S. media representatives desiring accreditation should contact the USAF Public Affairs Office at Vandenberg Air Force Base at 805/734-8232 extension 63595; FAX extension 68303 or E-mail pubaffairs@plans.vafb.af.mil.

Television coverage of RADARSAT on NASA TV will include the mission science briefing, the prelaunch news conference, the liftoff of RADARSAT atop the Delta rocket, and the post-launch news conference. NASA Televison is on Spacenet 2, Transponder 5, Channel 9 located at 69 degrees West. Coverage of launch will begin at 6:00 a.m. PDT.

- end -

NASA press releases and other information are available automatically by sending an Internet electronic mail message to domo@hq.nasa.gov. In the body of the message (not the subject line) users should type the words "subscribe press-release" (no quotes). The system will reply with a confirmation via E-mail of each subscription. A second automatic message will include additional information on the service. Questions should be directed to (202) 358-4043.

Internet Advisory

National Aeronautics and
Space Administration
Washington, DC 20546
(202) 358-1600

For Release

September 7, 1995

Douglas Isbell
Headquarters, Washington, DC
(Phone: 202/358-1753)

Kelly Humphries
Johnson Space Center, Houston
(Phone: 713/244-5050)

I95-12

SPARTAN 201 CU-SEEME NOTICE

Scientists investigating the Sun's outer atmosphere and the solar wind using the retrievable Spartan 201 spacecraft will host NASA's first-ever video teleconferencing sessions with the public, while this small telescope carrier is deployed from Space Shuttle Endeavour on the STS-69 mission.

Using Internet software called "CU-SeeMe," students and the general public are encouraged to discuss the Spartan mission during two planned "Ask the Astronomers" sessions. These sessions are currently scheduled for Friday, Sept. 8, from 8-10 p.m. EDT and Saturday, Sept. 9, from 3-5 p.m. EDT.

Dr. Madhulika Guhathakurta and Dr. Leonard Strachan will be available at NASA's Johnson Space Center in Houston at the IP connection address **198.122.133.40** to answer questions and explain the purpose and goals of the Spartan 201 solar physics mission.

Further information on this unique, experimental event is available at the following World Wide Web site:

http://umbra.gsfc.nasa.gov/spartan/ask_astronomers.html

Further information on the Spartan 201 spacecraft and the other elements of the STS-69 mission is available at the NASA Shuttle Web site:

http://shuttle.nasa.gov

-end-

NASA press releases and other information are available automatically by sending an Internet electronic mail message to domo@hq.nasa.gov. In the body of the message (not the subject line) users should type the words "subscribe press-release" (no quotes). The system will reply with a confirmation via E-mail of each subscription. A second automatic message will include additional information on the service. Questions should be directed to (202) 358-4043.

News Release

National Aeronautics and
Space Administration

Washington, DC 20546
(202) 358-1600

Wade Sisler
Headquarters, Washington, DC
(Phone: 202/358-1717)

For Release
September 7, 1995

NOTE TO EDITORS: N95-59

NASA ADMINISTRATOR'S SEMINAR SCHEDULED

"Machine Consciousness and the Exploration of Space," the next in a series to help shape a unified agenda for the future of NASA's space program will be held at 3 p.m. EDT, on Monday, September 11, 1995, in the NASA Headquarters' auditorium, 300 E St., SW, Washington, DC.

Dr. Roger Penrose, Mathematical Institute of Oxford, and Dr. Hans Peter Moravec, Carnegie Mellon University will explore the evolution of computers and the possibility of machine consciousness.

The seminar series, initiated by NASA Chief Scientist Dr. France Anne Cordova and introduced by NASA Administrator Daniel S. Goldin, will continue over the next year and will consider fundamental questions relevant to NASA's greatest challenges.

Media representatives who wish to cover the event with cameras should notify Wade Sisler at 202/358-1717 by 1 p.m. EDT on September 11 .

-end-

NASA press releases and other information are available automatically by sending an Internet electronic mail message to domo@hq.nasa.gov. In the body of the message (not the subject line) users should type the words "subscribe press-release" (no quotes). The system will reply with a confirmation via E-mail of each subscription. A second automatic message will include additional information on the service. Questions should be directed to (202) 358-4043.

Video Advisory

National Aeronautics and
Space Administration
Washington, DC 20546
(202) 358-1600

For Release

September 7, 1995

Dwayne Brown
Headquarters, Washington, DC
(Phone: 202/358-1726)

VIDEO ADVISORY: V95-138

SPACE SHUTTLE ENDEAVOUR, HURRICANE LUIS IMAGES ON NTV

NASA TV will provide continuous coverage of Space Shuttle Endeavour's flight through landing, including daily mission status briefings. The 11-day mission will include the deployment and retrieval of the Wake Shield Facility and the Spartan 201 free-flyer. The Wake Shield Facility is a 12 foot diameter, stainless steel disk that will create an "ultra-vacuum" environment in space within which thin semiconductor films for next-generation advanced electronics will be grown. The Spartan 201 will investigate the interaction between the Sun and its outflowing wind of charged particles.

In addition, NTV will air the latest daily images taken from the GOES-9 geostationary weather satellite monitoring Hurricane Luis. Images will be aired immediately following the mission video file which begins at approximately 4 p.m. EDT. Developed by NASA, GOES-9 is providing high resolution images, temperature and humidity profiles, and wind velocity data of Luis.

During the flight the NASA Television video news file will air at 4 p.m. EDT.

During STS-69, mission information also may be accessed via the Internet and the World Wide Web at the following URL:

http://shuttle.nasa.gov

The Shuttle mission home pages are designed to give visitors the opportunity to experience a Space Shuttle mission through access to detailed, up-to-the-minute multimedia information during each flight.

Media may obtain mission updates by contacting the following NASA Newsrooms:

During mission	Johnson Space Center, Houston	713/483-5111
Shuttle launch and landing	Kennedy Space Center, FL	407/867-2468

NASA Television is broadcast on Spacenet 2, transponder 5, channel 9, C-Band, located at 69 degrees West longitude, with horizontal polarization. Frequency will be on 3880.0 megahertz, with audio on 6.8 megahertz.

-end-

News Release

National Aeronautics and
Space Administration

Washington, DC 20546
(202) 358-1600

For Release

Don Nolan-Proxmire
Headquarters, Washington, DC
(Phone: 202/358-1983)

September 11, 1995

RELEASE: 95-150

NASA/FAA FORM PARTNERSHIP TO IMPROVE AIR TRANSPORTATION EFFICIENCY

NASA Administrator Daniel S. Goldin and FAA Administrator David R. Hinson signed a memorandum of understanding (MOU) today that initiates joint research and development activities to improve the efficiency of the nation's airspace system.

Using the latest aerospace technology, NASA/FAA initiatives will ultimately improve service to the flying public by decreasing delays through increased airspace user flexibility while maintaining the highest level of safety.

"NASA is proud to support the FAA in their effort to improve the airspace system," said Goldin. "Consumers, aircraft operators and the FAA are on the threshold of the next epoch in air traffic management. I believe our contribution to this national challenge will bring the dream to reality."

NASA and FAA will work together to develop a new system that takes advantage of key technologies such as the Global Positioning System, the Wide Area Augmentation System, and data link.

"The combination of NASA's aeronautics and FAA's air traffic management expertise will help lead the nation toward our long-term goal of Free Flight," said Hinson. "Free Flight will allow pilots, whenever practical, to choose their own route and file a flight plan that follows the most efficient and economical trajectories. I'm confident that this MOU will help bring us into the 21st century, building on the success we've had with the National Route Program which is already making great strides toward our Free Flight goal."

The initiative will be managed by a NASA/FAA Integrated Product Team. The team will address both near and long-term requirements, with initial emphasis on improvements that can be implemented within the next 10 years.

-more-

Specific areas for joint NASA/FAA activities may include, but will not be limited to:

•Roles of flight crews and air traffic controllers: More flexible flight operations may involve new roles for flight crews and air traffic controllers.

•Integration of air traffic management, cockpit and fleet management: Emerging technologies may permit closer integration of air traffic management, cockpit flight management and operational control centers.

•Cockpit situation awareness: Technologies developed for the Traffic Alert and Collision Avoidance System and Automatic Dependent Surveillance Broadcast offer new opportunities to improve cockpit situational awareness both on the airport surface and throughout airspace. Further development will increase flight crew participation in air traffic management decision-making.

•Conflict detection and resolution: Development of automation technologies and pilot/controller roles will enable users to accurately predict and resolve conflicts in an efficient and safe manner.

•Flight restrictions: Development of concepts, technologies, responsibilities, and procedures will minimize flight restrictions and maximize aircraft operations. Restrictions will continue to be imposed in high density areas.

•Safety analysis: The highest level of safety will be maintained. This will require analyses and simulations of safety hazards and development of tools for proactive detection of potentially hazardous situations.

•All vehicle classes: Flight operations will accommodate all users including but not limited to transport, general aviation, rotorcraft and military aircraft. The system will accommodate each aircraft class while assuring that avionics requirements are cost effective and affordable.

•Cost-benefit assessments: Each step in the transition to more flexible flight operations will be substantiated by cost-benefit estimates. Projections will include impacts on both airspace users and air traffic management service providers.

-end-

NASA press releases and other information are available automatically by sending an Internet electronic mail message to domo@hq.nasa.gov. In the body of the message (not the subject line) users should type the words "subscribe press-release" (no quotes). The system will reply with a confirmation via E-mail of each subscription. A second automatic message will include additional information on the service. Questions should be directed to (202) 358-4043.

News Release

National Aeronautics and
Space Administration

Washington, DC 20546
(202) 358-1600

For Release

Michael Braukus
Headquarters, Washington, DC
(Phone: 202/358-1979)

September 11, 1995

RELEASE: 95-151

NASA SELECTS UNIVERSITIES FOR LIFE SCIENCES RESEARCH

NASA has selected three universities to serve as NASA Specialized Centers of Research and Training (NSCORTs) to increase scientists' understanding of the role that Earth's gravity plays in living things.

North Carolina State University, Rice University and Rutgers University were selected to serve as NSCORTs for the next five years. The selections were made on the basis of merit as judged by peer review panels assembled by the American Institute of Biological Sciences. NASA plans to award each of the universities approximately $1 million a year for five years.

North Carolina State University in Raleigh was designated a NSCORT in gravitational biology. Eric Davies, Ph.D., head of the botany department, is the director of the new center. Wake Forest University in Winston-Salem is a collaborating partner.

Rice University in Houston, TX, also was designated a NSCORT in gravitational biology. The center director is Larry V. McIntire, Ph.D., the chair of the university's Institute of Biosciences and Bioengineering. NASA's Johnson Space Center in Houston is a partner with Rice.

Rutgers University in New Brunswick, NJ, was designated a NSCORT in bioregenerative life support. Harry W. Janes, Ph.D., professor of horticulture and forestry, is the director. Stevens Institute of Technology, Hoboken, NJ, is a collaborating partner.

The NSCORT program is an integral part of NASA's research and analysis activities to advance basic knowledge of the role of gravity in living systems and create effective methods for solving specific problems in the space life sciences. This program is established exclusively to support ground research and analysis in various research specialties.

-more-

The addition of these universities brings the total number of NASA-funded NSCORTs to eight. The previously selected institutions and their specialties include:

Lawrence Berkeley Laboratory, CA - Radiation Health
Northwestern University Medical School, Chicago, IL (funded jointly by National Institutes of Health)- Vestibular Research
Ohio State University (funded jointly by National Science Foundation) - Plant Biology
University of California, San Diego - Exobiology
University of Texas, Southwestern Medical Center - Integrated Physiology

In addition, Germany is funding a NSCORT in radiation health at the University of Giessen.

- end -

NASA press releases and other information are available automatically by sending an Internet electronic mail message to domo@hq.nasa.gov. In the body of the message (not the subject line) users should type the words "subscribe press-release" (no quotes). The system will reply with a confirmation via E-mail of each subscription. A second automatic message will include additional information on the service. Questions should be directed to (202) 358-4043.

News Release

National Aeronautics and
Space Administration

Washington, DC 20546
(202) 358-1600

For Release

September 13, 1995

Don Nolan-Proxmire
Headquarters, Washington, DC
(Phone: 202/358-1983)

Don Haley
Dryden Flight Research Center, Edwards, CA
(Phone: 805/258-3456)

RELEASE: 95-152

NEW SOLAR-POWERED ALTITUDE RECORD SET IN NASA TEST FLIGHT

A NASA unpiloted, remotely-controlled aircraft, using the Sun's energy to fly to stratospheric altitudes, achieved a milestone flight demonstration on September 11, that could lead to better understanding of the upper atmosphere and the effect of greenhouse gases on Earth's environment.

The aircraft is called Pathfinder and is one of several unpiloted prototype research vehicles under study by NASA. The flight at NASA's Dryden Flight Research Center, Edwards, CA, was the first in a series of high altitude tests of the solar-powered aircraft, developed by AeroVironment Inc., Monrovia, CA. During the nearly 12-hour mission, Pathfinder -- controlled from a ground station -- reached an altitude of 50,500 feet, a new record for a solar-powered aircraft.

The all-wing aircraft, weighing less than 600 pounds, is being evaluated by a NASA-industry alliance in a program to develop technologies necessary to operate unpiloted aircraft at altitudes of up to 100,000 feet on environmental sampling missions lasting up to a week or more. The evaluation program is called ERAST -- Environmental Research Aircraft and Sensor Technology -- and is part of NASA's Mission to Planet Earth effort to study and protect the environment. Among the technologies being looked at by the NASA-industry ERAST alliance, in addition to solar power, are lightweight materials, avionics, sensor technology, aerodynamics, and other forms of propulsion suitable for extreme altitudes.

"The Pathfinder flight demonstrated the viability of solar technology for high altitude unpiloted aircraft and cleared a path towards the environmental research aircraft of the twenty-first century," said Jennifer Baer-Reidhart, ERAST Project Manager. "The altitude achievement was a major milestone for the program and also demonstrated the capability of the vehicle to carry scientific payloads and other experiments into the stratosphere."

-more-

During the flight, which began at 9:29 a.m. PDT on Rogers Dry Lakebed at Edwards, Pathfinder was carrying four small payloads: a device designed by NASA's Ames Research Center, Moffett Field, CA, to collect aerosol-size data; a solar cell calibration computer from NASA's Lewis Research Center, Cleveland, OH; a Navy communications relay unit; and a strain gauge package to collect data on Pathfinder's composite structure.

Maximum altitude was reached at about 3:30 p.m. PDT. Altitude was limited because of available sunlight for solar cell operations. The vehicle landed back on Rogers Dry Lakebed at 8:25 p.m. PDT.

Data from the payloads and flight recording system will be analyzed in preparation for a second high-altitude mission in the near future.

Previous holder of the solar aircraft record of 14,000 feet was the Solar Challenger, also built by AeroVironment Inc. The company also developed the human-powered Gossamer Condor and Gossamer Albatross lightweight aircraft.

-end-

RESOURCE PHOTOGRAPHS: Digital photos are available at the Dryden World Wide Web home page at URL:

http://www.dfrc.nasa.gov/PhotoServer/photoServer.html in the "Dryden Research Aircraft Photo Archive" (EC95-43261-1 and EC95-43261-2) in the "Dryden News and Feature Photos" file.

NASA press releases and other information are available automatically by sending an Internet electronic mail message to domo@hq.nasa.gov. In the body of the message (not the subject line) users should type the words "subscribe press-release" (no quotes). The system will reply with a confirmation via E-mail of each subscription. A second automatic message will include additional information on the service. Questions should be directed to (202) 358-4043.

95-152

NATIONAL AERONAUTICS AND SPACE ADMINISTRATION

SPACE SHUTTLE MISSION STS-73

PRESS KIT
SEPTEMBER 1995

UNITED STATES MICROGRAVITY LABORATORY-2 (USML-2)

PUBLIC AFFAIRS CONTACTS

For Information on the Space Shuttle

Ed Campion Headquarters, Wash., DC	Policy/Management	202/358-1778
Rob Navias Johnson Space Center, Houston	Mission Operations Astronauts	713/483-5111
Bruce Buckingham Kennedy Space Center, FL	Launch Processing KSC Landing Information	407/867-2468
June Malone Marshall Space Flight Center, Huntsville, AL	External Tank/SRBs/SSMEs	205/544-0034
Cam Martin Dryden Flight Research Center, Edwards, CA	DFRC Landing Information	805/258-3448

For Information on STS-73 Experiments & Activities

Mike Braukus Headquarters, Wash., DC	USML-2	202/358-1979
Terri Hudkins Headquarters, Wash., DC	Education Experiments	202/358-1977

CONTENTS

GENERAL BACKGROUND
General Release 1
Media Services Information 3
Quick-Look Facts 5
Shuttle Abort Modes 7
Orbital Events Summary 8
Summary Timeline 9
Crew Responsibilities 10
Payload and Vehicle Weights 11

CARGO BAY PAYLOADS & ACTIVITIES
United States Microgravity Laboratory-2 (USML-2) 13

IN-CABIN PAYLOADS
Education Experiments 41

STS-73 CREW BIOGRAPHIES
Kenneth D. Bowersox, Commander (CDR) 42
Kent Rominger, Pilot (PLT) 42
Kathryn Thornton, Payload Commander/Mission Specialist-3 (MS-3) 43
Catherine Coleman, Mission Specialist-1 (MS-1) 43
Michael Lopez-Alegria, Mission Specialist-2 (MS-2) 44
Fred Leslie, Payload Specialist-1 (PS-1) 44
Albert Sacco, Payload Specialist-3 (PS-2) 44

Release: 95-152

SECOND FLIGHT OF UNITED STATES MICROGRAVITY LABORATORY HIGHLIGHTS SIXTH SHUTTLE MISSION OF 1995

The second United States Microgravity Laboratory (USML-2) Spacelab mission will be the centerpiece of the STS-73 Space Shuttle flight in late September 1995. The Orbiter Columbia's planned 16-day flight will continue a cooperative effort of the U.S. government, universities and industry to push back the frontiers of science and technology in "microgravity," the near-weightless environment of space.

Combining the strengths of these different communities allows for more extensive ground-based research in preparation for flight, improved methods for microgravity experimentation, and a wider distribution of the knowledge gained in the process. The involvement of U.S. industry also means that the results of both ground-based experiments and Shuttle operations can be "brought down to Earth" in a timely and practical manner.

Leading the five-person STS-73 crew will be Mission Commander Kenneth D. Bowersox who will be making his third space flight. Pilot for the mission is Kent Rominger making his first flight. The three mission specialists for STS-73 are Kathryn Thornton, Payload Commander and Mission Specialist 3 (MS3), making her fourth flight; Catherine Coleman, Mission Specialist 1 (MS1), making her first flight; and Michael Lopez-Alegria, Mission Specialist 2 (MS2) making his first flight. Also aboard Columbia will be two payload specialists--Fred Leslie, Payload Specialist 1 (PS1), and Albert Sacco, Payload Specialist 2 (PS2), both of whom will be making their first space flight.

Launch of Columbia on the STS-73 mission is currently scheduled for no earlier than September 28, 1995 at 9:35 a.m. EDT. The planned mission duration is 15 days, 21 hours and 54 minutes. An on-time launch on September 28 would produce a landing at 7:30 a.m. EDT on October 14 at Kennedy Space Center's Shuttle Landing Facility.

Some of the experiments being carried on the USML-2 payload were suggested by the results of the first USML mission that flew aboard Columbia in 1992 during Mission STS-50. The USML-1 mission provided new insights into theoretical models of fluid physics, the role of gravity in combustion and flame spreading, and how gravity affects the formation of semiconductor crystals. Data collected from several protein crystals grown on USML-1 have enabled scientists to determine the molecular structures of those proteins.

USML-2 builds on that foundation. Technical knowledge gained has been incorporated into the mission plan to enhance procedures and operations. Where possible, experiment teams have refined their hardware to increase scientific understanding of basic physical processes on Earth and in space, as well as to prepare for more advanced operations aboard the international Space Station and other future space programs.

The experiments being carried as part of the USML-2 payload cover a variety of scientific disciplines including fluid physics, materials science, biotechnology and combustion science.

The fluid physics area is fundamental to many types of science, from the ways molten metals solidify and fuels burn, to the way planetary atmospheres operate. In space, subtle and complex phenomena normally hidden by the stronger force of gravity can be revealed for detailed study.

Materials science will increase insight into the relationships between the structure, processing and properties of materials. Mixtures that separate on Earth because of different component densities can be evenly mixed and processed in microgravity. This allows scientists to study the processing of such materials and to create advanced materials for study and comparison. Without the pull of gravity and the associated convective flows, more perfect crystals can be produced, an advance many believe vital for creation of advanced computer chips and semiconductors.

Biotechnology experiments will grow protein crystals in three different experiment facilities, attempting to produce crystals of sufficient size and perfection that scientists can determine their structure and how they form. This approach is being pursued because of the promise it holds for the development of improved drugs. Two other biotechnology experiments address the development of food crops with higher protein content and increased disease resistance.

Combustion science will aid in understanding the way a fire starts and spreads. Understanding the combustion process without the interference of gravity could lead to more efficient fuels and improved fire safety, both in space and on Earth.

Also during the STS-73 mission, students at four sites will interact with Columbia's astronauts to discuss and compare onboard microgravity experiments with similar ground-based experiments. The goal is to involve students as participants in Shuttle investigations in an effort to generate excitement in physical science and chemistry.

STS-73 will be the 18th flight of Space Shuttle Columbia and the 72nd flight of the Space Shuttle system.

- end -

MEDIA SERVICES INFORMATION

MEDIA SERVICES INFORMATION

NASA Television Transmission

NASA Television is available through the Spacenet-2 satellite system, transponder 5, channel 9, at 69 degrees West longitude, frequency 3880.0 MHz, audio 6.8 Megahertz.

The schedule for television transmissions from the Orbiter and for mission briefings will be available during the mission at Kennedy Space Center, FL; Marshall Space Flight Center, Huntsville, AL; Dryden Flight Research Center, Edwards, CA; Johnson Space Center, Houston; NASA Headquarters, Washington, DC. The television schedule will be updated to reflect changes dictated by mission operations.

Television schedules also may be obtained by calling COMSTOR 713/483-5817. COMSTOR is a computer data base service requiring the use of a telephone modem. A voice update of the television schedule is updated daily at noon Eastern time.

Status Reports

Status reports on countdown and mission progress, on-orbit activities and landing operations will be produced by the appropriate NASA newscenter.

Briefings

A mission press briefing schedule will be issued prior to launch. During the mission, status briefings by a Flight Director or Mission Operations representative and when appropriate, representatives from the payload team, will occur at least once per day. The updated NASA television schedule will indicate when mission briefings are planned.

Access by Internet

NASA press releases can be obtained automatically by sending an Internet electronic mail message to domo@hq.nasa.gov. In the body of the message (not the subject line) users should type the words "subscribe press-release" (no quotes). The system will reply with a confirmation via E-mail of each subscription. A second automatic message will include additional information on the service.

Informational materials also will be available from a data repository known as an anonymous FTP (File Transfer Protocol) server at ftp.pao.hq.nasa.gov under the directory /pub/pao. Users should log on with the user name "anonymous" (no quotes), then enter their E-mail address as the password. Within the /pub/pao directory there will be a "readme.txt" file explaining the directory structure.

The NASA public affairs homepage also is available via the Internet. The page contains images, sound and text (press releases, press kits, fact sheets) to explain NASA activities. It also has links to many other NASA pages. The URL is: **http://www.nasa.gov/hqpao/hqpao_home.html**.

Pre-launch status reports from KSC are found under **ftp.hq.nasa.gov/pub/pao/statrpt/ksc**, and mission status reports can be found under **ftp.hq.nasa.gov/pub/pao/statrpt/jsc**. Daily TV schedules can be found under **ftp.hq.nasa.gov/pub/pao/statrpt/jsc/tvsked**.

Access by fax

An additional service known as fax-on-demand will enable users to access NASA informational materials from their fax machines. Users calling (202) 358-3976 may follow a series of prompts and will automatically be faxed the most recent Headquarters news releases they request.

Access by CompuServe

Users with CompuServe accounts can access NASA press releases by typing "GO NASA" (no quotes) and making a selection from the categories offered.

STS-73 QUICK LOOK

Launch Date/Site:	September 28, 1995/KSC Launch Pad 39-B
Launch Time:	9:35 AM EDT
Launch Window:	2 hours, 30 minutes
Orbiter:	Columbia (OV-102), 18th flight
Orbit Altitude/Inclination:	150 nautical miles/39 degrees
Mission Duration:	15 days, 21 hours, 54 minutes
Landing Date:	October 14, 1995
Landing Time:	7:30 AM EDT
Primary Landing Site:	Kennedy Space Center, FL
Abort Landing Sites:	Return to Launch Site - KSC Transoceanic Abort Sites - Ben Guerir, Morocco Moron, Spain, Zaragoza, Spain Abort-Once Around - Edwards Air Force Base, CA

Crew:	Ken Bowersox, Commander (CDR), Red Team Kent Rominger, Pilot (PLT), Red Team Catherine Coleman, Mission Specialist (MS 1), Blue Team Michael Lopez-Alegria, MS 2, Blue Team Kathryn Thornton, MS 3, Red Team Fred Leslie, Payload Specialist 1 (PS 1), Blue Team Albert Sacco, (PS 2), Red Team
EVA Crew Members:	Michael Lopez-Alegria (EV1), Catherine Coleman (EV2)
Cargo Bay Payloads:	United States Microgravity Laboratory - 2 OARE

Developmental Test Objectives/Detailed Supplementary Objectives

DTO 301D:	Ascent Structural Capability Evaluation
DTO 307D:	Entry Structural Capability
DTO 312:	ET TPS Performance
DTO 319D:	Shuttle/Payload Low Frequency Environment
DTO 414:	APU Shutdown Test
DTO 623:	Cabin Air Monitoring
DTO 655:	Foot Restraint Evaluation
DTO 667:	Portable In-Flight Landing Operations Trainer
DTO 679:	Ku-Band Communications Adapter Demonstration
DTO 682:	Inertial Vibration Isolation System
DTO 805:	Crosswind Landing Performance
DTO 913:	Microgravity Measuring Device Evaluation
DTO 1121:	Ground-to-Air TV Demonstration
DSO 487:	Immunological Assessment of Crew Members
DSO 491:	Characterization of Microbial Transfer Among the Crew
DSO 603C:	Orthostatic Function During Entry, Landing and Egress
DSO 604:	Visual Vestibular Integration as a Function of Adaptation
DSO 605:	Postural Equilibrium Control During Landing/Egress
DSO 611:	Air Monitoring Instrument Evaluation and Atmosphere Test
DSO 621:	In-Flight Use of Florinef to Improve Orthostatic Intolerance
DSO 624:	Pre and Postflight of Cardiorespiratory Response to Exercise
DSO 626:	Cardiovascular and Cerebrovascular Response Before and After Flight
DSO 802:	Educational Activities
DSO 901:	Documentary Television
DSO 902:	Documentary Motion Picture Photography
DSO 903:	Documentary Still Photography
DSO 904:	Assessment of Human Factors

SPACE SHUTTLE ABORT MODES

The Space Shuttle launch abort philosophy aims toward safe and intact recovery of the flight crew, orbiter and its payload. Abort modes for STS-73 include:

* **Abort-To-Orbit (ATO)** -- Partial loss of main engine thrust late enough to permit reaching a minimal 105-nautical mile orbit with the orbital maneuvering system engines.

* **Abort-Once-Around (AOA)** -- Earlier main engine shutdown with the capability to allow one orbit of the Earth before landing at the Edwards Air Force Base, CA.

* **TransAtlantic Abort Landing (TAL)** -- Loss of one or more main engines midway through powered flight would force a landing at either Ben Guerir, Morocco; Moron, Spain; or Zaragoza, Spain.

* **Return-To-Launch-Site (RTLS)** -- Early shutdown of one or more engines, and without enough energy to reach a TAL site, would result in a pitch around and thrust back toward KSC until within gliding distance of the Shuttle Landing Facility.

STS-73 ORBITAL EVENTS SUMMARY
(Based on a Sept. 28, 1995 Launch)

EVENT	MET	TIME OF DAY (EDT)
Launch	0/00:00	9:35 AM, September 28
OMS-2	0/00:43	10:18 AM, September 28
Spacelab Activation	0/02:10	11:41 AM, September 28
Crew News Conference	13/19:30	5:05 AM, October 12
FCS Checkout	14/19:30	5:05 AM, October 13
Spacelab Deactivation	15/13:45	11:20 PM, October 13
Deorbit Burn	15/20:54	6:30 AM, October 14
KSC Landing	15/21:54	7:30 AM, October 14

MISSION SUMMARY TIMELINE

Flight Day One:
Launch/Ascent
OMS-2 Burn
Spacelab Activation
USML-2 Operations

Flight Days 2-14:
USML-2 Operations

Flight Day 12:
Educational TV event with
students in Bozeman, MT, and
Las Cruces, NM

Flight Day 13:
Educational TV event with
students in Worcester, MA, and
Louisville, KY

Flight Day 15:
USML-2 Operations
Crew News Conference

Flight Day 16:
USML-2 Operations
Flight Control System Checkout
Reaction Control System Hot-Fire
Cabin Stow
Spacelab Deactivation

Flight Day 17:
Deorbit Prep
Deorbit Burn
Entry
KSC Landing

CREW RESPONSIBILITIES

Payloads	Prime	Backup
USML-2	Thornton, Coleman Sacco, Leslie	
DTO/DSOs		
DTO 312	Coleman, Lopez-Alegria	
DTO 623	Rominger	Bowersox
DTO 655	Thornton, Coleman, Sacco	
DTO 667	Rominger	Bowersox
DTO 679	Bowersox, Lopez-Alegria	Rominger
DTO 682	Rominger, Lopez-Alegria	Bowersox
DTO 913	Rominger, Lopez-Alegria	Bowersox
DSO 603C	Thornton, Leslie, Sacco	
DSO 604	Rominger, Lopez-Alegria	
DSO 605	Bowersox	
DSO 611	Rominger, Lopez-Alegria	
DSO 621	Leslie	
DSO 624	Bowersox, Rominger	
DSO 626	Thornton, Sacco, Leslie	
DSO 802	Coleman, Sacco	
DSO 901	Rominger, Lopez-Alegria	
DSO 902	Rominger, Lopez-Alegria	
DSO 903	Rominger, Lopez-Alegria	
Other Activities		
Earth Observations	Rominger, Lopez-Alegria	Bowersox
EVA (if needed)	Lopez-Alegria (EV1)	Coleman (EV2)
IV Crewmember	Thornton	
Spacelab Activation	Thornton, Sacco	
Spacelab Deactivation	Coleman, Leslie	Lopez-Alegria

VEHICLE AND PAYLOAD WEIGHTS

Vehicle/Payload	Pounds
Orbiter (Columbia) empty and 3 SSMEs	182,070
Spacelab and USML-2 Experiments	22,726
Middeck USML-2 Experiments	897
Orbital Acceleration Research Experiment (OARE)	249
DTOs/DSOs	129
Shuttle System at SRB Ignition	4,521,139
Orbiter Weight at Landing	230,158

USML-2 PAYLOAD CONFIGURATION

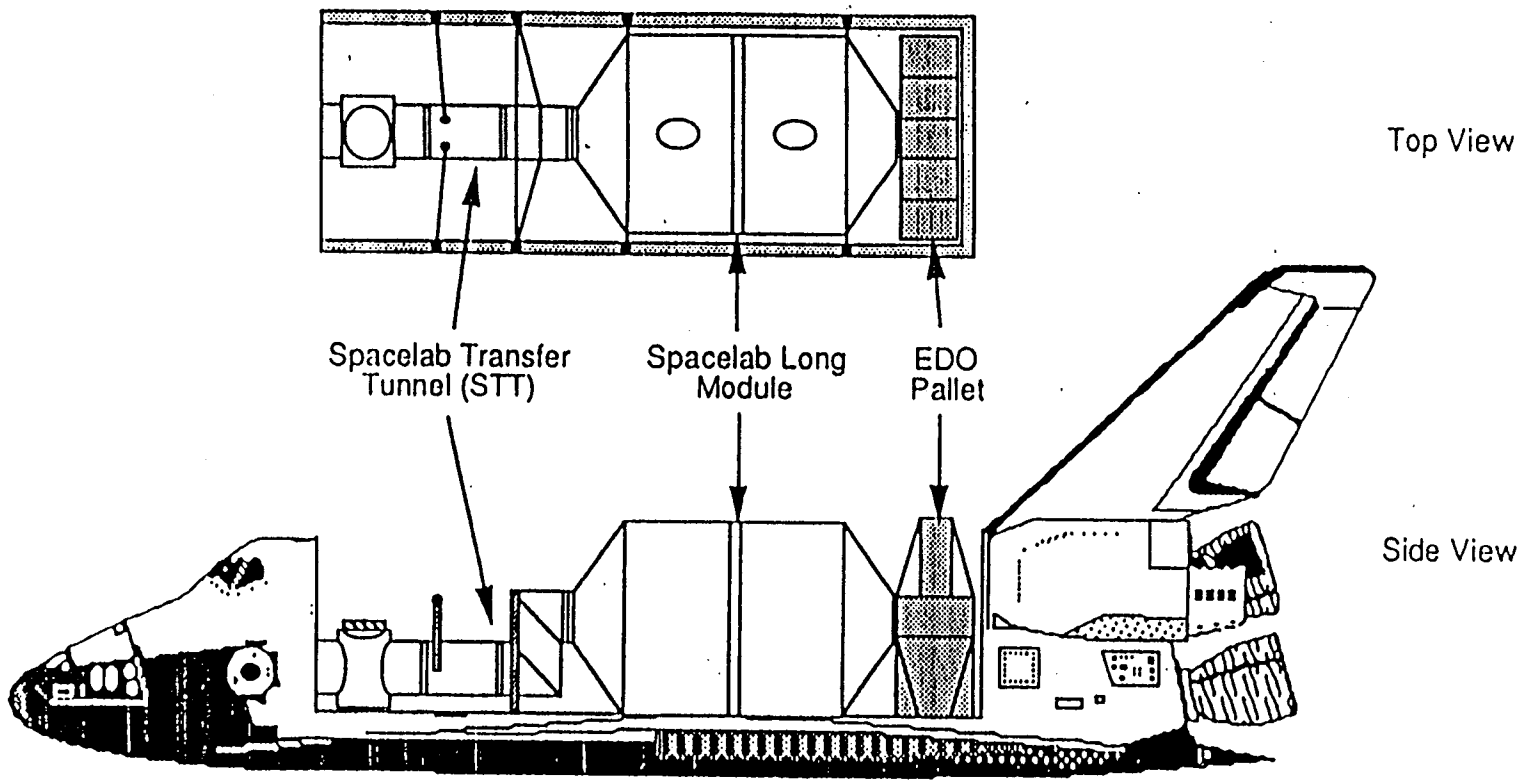

UNITED STATES MICROGRAVITY LABORATORY-2 (USML-2)

The second United States Microgravity Laboratory (USML-2) Spacelab mission builds on the foundation of its predecessor.

The first USML mission, which flew aboard Columbia in 1992 was one of the most successful NASA science missions. It provided new insights into theoretical models of fluid physics, the role of gravity in combustion and flame spreading, and how gravity affects the formation of semiconductor crystals. Data collected from several protein crystals grown on USML-1 have enabled scientists to determine the molecular structures of those proteins.

USML-1 was the first flight for four major experiment facilities -- the Drop Physics Module, the Surface Tension Driven Convection Experiment apparatus, the Crystal Growth Furnace and the Glovebox -- which promise to provide a valuable technology base for future flights. A major objective of the USML program is to develop more capable instruments to support and refine mature space-based experimentation for the future.

Technical knowledge gained has been incorporated into the USML-2 mission plan to enhance procedures and operations. Where possible, experiment teams have refined their hardware to increase scientific understanding of basic physical processes on Earth and in space, as well as to prepare for more advanced operations aboard the international Space Station and other future space programs.

USML-2 Research

Research during the mission is concentrated within the same overall areas as the first USML flight. Reflown experiments will follow-up on results from that mission, probing for answers to the next level of scientific questions.

Fluid physics research with the Drop Physics Module, the Surface Tension Driven Convection Experiment and the Gravitational Fluid Flow Cell will seek to improve understanding of fluid behavior and to apply that understanding to processes of scientific and technical importance. Fluid physics is fundamental to many types of science, from the ways molten metals solidify and fuels burn, to the way planetary atmospheres operate. In space, subtle and complex phenomena normally hidden by the stronger force of gravity can be revealed for detailed study.

Materials science research in the Crystal Growth Furnace and the Zeolite Crystal Growth experiment will increase insight into the relationships between the structure, processing and properties of materials. Mixtures that separate on Earth because of different component densities can be evenly mixed and processed in microgravity. This allows scientists to study the processing of such materials and to create advanced materials for study and comparison. Without the pull of gravity and the associated convective flows, more perfect crystals can be produced, an advance many believe vital for creation of advanced computer chips and semiconductors.

Biotechnology research on USML-2 will grow protein crystals in three different experiment facilities, attempting to produce crystals of sufficient size and perfection that scientists can determine their structure and how they form. This approach is being pursued because of the promise it holds for the development of improved drugs. Two other biotechnology experiments address the development of food crops.

Combustion science, a study of how the basic combustion process is affected by gravity, will be represented by one of seven technology investigations within the versatile Glovebox enclosure. Understanding the way a fire starts and spreads without the interference of gravity could lead to more efficient fuels and improved fire safety, both in space and on Earth.

Three sets of sensors will help scientists evaluate the quality of the microgravity environment, identifying factors which may disturb sensitive experiments.

Several USML-2 experiments will look at how the presence or absence of gravity affects living organisms. This will aid long-term space efforts and also provide a better understanding of life on Earth.

Commercial space processing technologies will again be demonstrated with the Commercial Generic Bioprocessing Apparatus, giving a large number of university and industry researchers access to space for their biological experiments. Techniques for plant cultivation in microgravity will be further advanced in the Astroculture facility.

Several investigators will be able to view live video of their experiments at the same time, thanks to the new six-channel Hi-Pac video downlink system which will be making its first flight on USML-2.

The USML-2 Mission

USML-2 experiment racks will be housed in a 23-foot Spacelab module inside the Shuttle Columbia's cargo bay. The laboratory module is pressurized so researchers can work in their shirtsleeves instead of bulky space suits, and it is furnished with much of the same kind of equipment that they would use in their labs back home.

The seven-member crew will work in two 12-hour shifts, so experiment operations can continue around the clock. The four payload crew members will conduct the majority of USML-2 science operations. NASA astronaut Dr. Kathryn Thornton is payload commander, and astronaut Dr. Catherine Coleman is a science mission specialist for the flight. Dr. Fred Leslie of the Marshall Space Flight Center, Huntsville, AL, and Dr. Albert Sacco of the Worcester Polytechnic Institute, Worcester, MA, will serve as payload specialists on the USML-2 crew.

USML-2 flight controllers and experiment scientists will direct science activities from NASA's Spacelab Mission Operations Control facility at the Marshall Space Flight Center. In addition, science teams at several NASA centers and universities will monitor and support operations of a number of experiments.

USML-2 Spacelab Rack Assignments

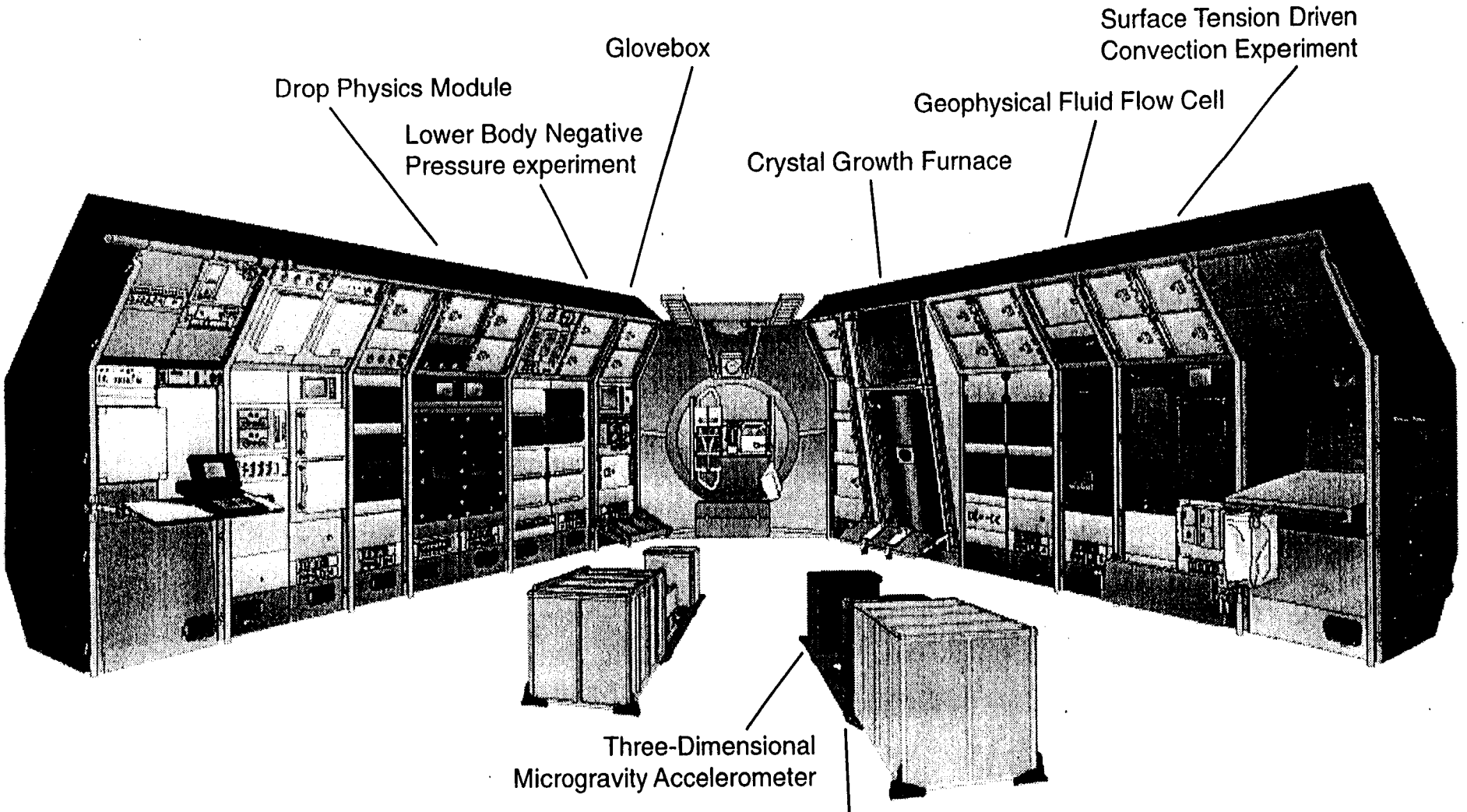

Located in the Shuttle Mid-Deck:

- Mid-deck Protein Crystal Growth Experiments
- Commerical Generic Bioprocessing Apparatus
- Astroculture
- Zeolite Crystal Growth

Surface Tension Driven Convection Experiment

The Surface Tension Driven Convection Experiment apparatus allows investigators to view in great detail the basic fluid mechanics and heat transfer of thermocapillary flows, motions created within fluids by non-uniform heating of their free surfaces. Temperature variations cause irregularities in the fluid's surface tension (the force which makes an unhindered liquid surface tend to form a sphere, like a raindrop), which in turn triggers flows in the fluid. This thermocapillary flow, then, can also be referred to as surface-tension-driven convection.

The facility uses a laser diode to illuminate particles suspended in silicone oil. Particle motions due to fluid flows, created by heating the oil either internally or on its surface, are recorded by a video camera attached to a chamber viewport. An infrared imaging system records oil surface temperature. A third camera, in concert with an optical measurement system, is used to monitor oil surface deformations and motions.

One key factor prompting this research is that unwanted fluid flows during melting and resolidifying can create defects in high-tech crystals, metals, alloys and ceramics.

On Earth, natural convection creates the strongest flows: colder, heavier fluid is pulled down, causing warmer, lighter fluid to rise. Thermocapillary flows occur in many industrial and materials processing methods as well, and they are known to play an important role. However, except in containers with very small dimensions like capillary tubes, thermocapillary flows are overshadowed by gravity-driven convection on Earth and are difficult to measure.

In space, under microgravity conditions, thermocapillary flows become prominent and can be studied in detail. Knowledge of their behavior and effects is important to a thorough understanding of fluid physics. It is also necessary because these flows affect space applications such as bubble and droplet migration, fuel management and storage, and life support systems, as well as material processing methods like crystal growth from liquids, containerless processing, and welding.

Understanding and controlling the effects of thermocapillary flows will become increasingly important as space flights become longer and space station operations begin.

Principal Investigator:
Dr. Simon Ostrach
Case Western Reserve University
Cleveland, OH

This experiment will seek to measure the transition from steady, two-dimensional flows to oscillatory, or three-dimensional, flows within silicone oil. Thermocapillary flows sometimes show these periodic variations in fluid motion speed and temperature during the limited studies possible on Earth.

By comparing conditions for the onset of this oscillation in microgravity and on Earth, scientists will gain insight into what causes it. Both steady thermocapillary flows and oscillatory flows may reduce the purity and uniformity of crystal growth solutions and molten metals.

STDCE scientists will use this experiment to evaluate fluid flow models and theories of how thermocapillary flows transition from steady to oscillatory conditions. They also will attempt to determine how and when oscillatory thermocapillary flows are created: how they are affected by different heat sources and shapes of free fluid surfaces; how flows affect surface shape; and what relationships exist among free surface deformation, surface temperature distribution, and fluid flow velocity.

On USML-1, STDCE experimenters concentrated on steady-state fluid flows, with results confirming many of their theoretical predictions. However, no oscillations were observed. On USML-2, three different sizes of experiment containers and several viscosities of oil will be used to create conditions favorable for oscillations. The STDCE imaging system has been improved to make oscillations easier to observe.

Drop Physics Module

The Drop Physics Module manipulates free-floating liquid drops in microgravity to test and expand current fluid physics models and theories and to measure the properties of liquid surfaces.

People have been observing fluid phenomena for a long time. One of the areas which fluid physicists are studying today is the interface, or boundary, between liquids, and its effects on the fluids on either side of it. In space, where gravity's overwhelming influence is minimized, scientists can unmask and study more subtle forces that drive fluid behavior. This fundamental knowledge can be beneficial for a variety of industries on Earth, from pharmacology to industrial chemistry.

The Drop Physics Module, operating in the microgravity environment of the Shuttle, allows investigators to study large drops in which dynamic phenomena will be slowed down and more easily seen. They can observe how flows inside a drop and the drop's surface interact to provide a variety of dynamic events: symmetric oscillations growing to become wild gyrations; dramatic splitting events where one drop breaks into two parts; and the centering of one drop within a second drop. Equally important, studies of how small amounts of an additive can drastically alter the behavior of a liquid drop will be made.

The module has a rectangular experiment chamber where liquid samples are deployed. The samples are positioned by sound waves emitted by four loudspeaker drivers — one on each side of the chamber's bottom wall. Gentle acoustic forces are all that are required to position the drops in the microgravity environment; this allows the liquid to assume its preferred shape, which is a perfect sphere.

A crew member controls the sound waves in the chamber to make the spherical drops vibrate, rotate, split or recombine, while a camera records the drops' responses. Particles are mixed into the fluid samples before flight to make motion inside the drop visible.

Experiment scientists will monitor drop behavior through real-time video, so they can assess their experiment's progress and can quickly suggest changes for the crew to make to improve the ultimate science return. A film camera inside the module also can be used to make a high-speed record of the drops' behavior for later, more detailed analysis.

Drop Dynamics Experiment
Principal Investigator:
Dr. Taylor Wang
Vanderbilt University
Nashville, TN

This experiment will gather high quality data on the dynamics of liquid drops in low gravity for comparison with theoretical predictions and ground-based studies using very small drops. It will provide scientific and technical inputs for the development of new fields, such as containerless processing of materials and polymer encapsulation of living cells.

On USML-1, Dr. Wang's team used the Drop Physics Module to confirm a theory that was more than 100 years old. Using fluids ranging from water to oils, the module spun single drops until they formed a dog-bone shape. All the drops changed into the same shape at the same point and at exactly the point that had been predicted over a century ago by fluid dynamics pioneer Lord Raleigh.

Having resolved the issues surrounding the point at which the drops change shape, the team will use USML-2 to examine two new aspects of drop phenomena. Again, results will help confirm or refine mathematical theories.

One set of theories to be tested describes the fissioning, or breaking apart, of distorted drops as the viscosity (or thickness) of the fluid is varied. Scientists will observe and analyze conditions at which various sizes and viscosities of drops split.

The second thrust of this effort attempts to lay the ground work for encapsulating living cells which could be used to treat hormonal disorders: a spherical polymer shell would protect the cells from immunological attack and provide timed release. The principal investigator will study the centering of shells (air bubbles within liquid drops) and compound drops (a drop of one liquid encased within a drop of a different liquid). This investigation could demonstrate how to provide uniform encapsulation which would aid scientists in using polymer systems to encapsulate living cells.

In the case of diabetes, an improved treatment would be to inject a pancreatic cell that secretes insulin into the body, rather than injecting insulin itself. But the foreign cell would be immediately attacked by the patient's immune system. If the cell were

encapsulated in a spherical shell made of a material strong enough to withstand attack, yet porous enough to allow absorption of nutrients and excretion of insulin, it could enable a marked improvement in treatment for diabetes patients.

Science and Technology of Surface-Controlled Phenomena
Principal Investigator:
Dr. Robert Apfel
Yale University
New Haven, CT

This study will use the Drop Physics Module to examine the influence of surfactants on the behavior of drops. Surfactants are substances which alter the surface properties of a liquid, aiding or inhibiting the way it adheres to or mixes with other substances. Processes which rely heavily on surfactants are as varied as dishwashing (soap and water is the classic surfactant-liquid interaction), the manufacture of cosmetics, the dissolution of proteins in synthetic drugs, the recovery of oil and environmental cleanup.

This investigation will have two parts. The first set of experiments will explore single drop oscillation. Drops with varying amounts of surfactants will be squeezed with sound waves; when the distortion is removed, the decay of the resulting oscillations can be analyzed. The second set of experiments will investigate the coalescence or combining of drops with varying concentrations of surfactants. Surfactants should allow the drops to combine more easily, but this is not always the case.

Both experiments will reveal surfactant behavior by creating novel situations that are not possible in Earth's normal gravity environment. Moreover, information gained from the space experiments will enable ground-based scientists to accurately and conveniently measure materials properties during similar tests on Earth.

Results of the surface-controlled phenomena investigation conducted during USML-1 were used to confirm and adjust theoretical models. The USML-2 experiments will help further refine these theories.

Geophysical Fluid Flow Cell Experiment
Principal Investigator:
Dr. John Hart
University of Colorado
Boulder, CO

The purpose of the Geophysical Fluid Flow Cell Experiment is to study how fluids move in microgravity, helping researchers understand the large-scale fluid dynamics of planetary and stellar atmospheres.

The experiment cannot be done in ground-based labs because the downward pull of Earth's gravity there is unlike the acceleration in stars and planets. In microgravity, different forms of acceleration can be simulated without interference.

The experiment uses two hemispheres. One, made of stainless steel and about the size of a baseball, is placed inside a transparent sapphire hemisphere, and a layer of silicone oil fills the space between the two. They are mounted together on a turntable. The transparent sapphire allows a clear view of the oil and conducts heat well so precise temperature control of the sapphire dome can be maintained.

The temperatures of the inner and outer hemispheres are controlled by the experiment computer, as is the speed of rotation. The heating creates a thermally driven motion in the oil, while the rotation mimics that present on rotating planets and stars. A high-voltage electric field is applied across the silicone oil, creating a buoyancy force identical to buoyant forces on Earth and in other atmospheres being modeled. The basic variables for the experiment are hemisphere rotation speed, voltage charge and temperatures. Once the variables are set and the experiment is running, thermally driven fluid flows within the rotating silicone oil are monitored. Dr. Hart and his team will study variations in the fluid's thermal patterns for a wide range of external forces. Different combinations of voltage, speed and temperature will be used during each run, creating unstable and turbulent flows in the rotating sphere shell that will help researchers better understand the dynamics of oceans, planetary atmospheres and stars.

The Gravitational Fluid Flow Cell first flew on the Spacelab 3 mission (STS-51B) in 1985. Several new types of convection were observed in the photographic data from the experiment, which contained images of convection structures, instabilities and turbulence, under varying conditions of different heating and rotation settings. The USML-2 experiment will expand on these results. In addition it will investigate flow instability for atmospheric flows that are more like the layers of Earth's atmosphere. The science team also will investigate patter formations relevant to flows in the Earth's mantle, as well as temperature distributions not studied on Spacelab 3.

Crystal Growth Furnace

The Crystal Growth Furnace is a reusable Spacelab facility for growing crystals of semiconducting material, metals and alloys. The furnace, which had its debut on USML-1, is the first space furnace developed by the United States to process multiple large samples at very high temperatures (above 1,832 degrees Fahrenheit or 1,000 degrees Celsius).

Atoms in many solids line up in orderly rows and columns, forming three-dimensional structures known as crystals. By melting or vaporizing a material and then studying how it changes back from a liquid or gas into a crystalline solid, scientists can learn which conditions affect its physical, chemical and other properties. They also can determine how these properties affect the material's performance. Better understanding of these processes is desirable in designing or enhancing qualities in a specific material.

Crystallization can be more effectively studied in microgravity than on Earth, because the gravity-induced phenomena that obscure or change the process are greatly reduced or eliminated. Gravity-related complications such as convection,

sedimentation and buoyancy can result in problems ranging from physical flaws in the internal structure of the crystal to uneven distribution of component materials within it.

By analyzing space-grown crystals with well-defined, orderly atomic structures, investigators can increase their knowledge of many types of materials — both in space and on the ground. In the future, this knowledge could result in improved materials, processing techniques, or products here on Earth.

The four primary USML-2 Crystal Growth Experiments are continuations of investigations from USML-1. Three will be grown with the directional solidification method, where a moving furnace allows the molten material to gradually cool from one end to the other. Since the crystal forms in only one direction, its atomic arrangement is more orderly and defect-free.

The fourth experiment will grow crystals using the vapor crystal growth method. The sample is heated until it begins to sublime, or turn from a solid into a gas. The vaporized material diffuses into a cooler area of the apparatus where it is gradually deposited onto a base material and a single crystal forms.

Near the end of the mission, a fifth sample will be processed in the furnace to determine the effect of different Shuttle attitudes on crystal growth. Solidification of a material whose behavior is well understood on Earth (germanium with a trace of gallium added), will begin with the Shuttle in the particular orientation thought to be best for crystal growth. Midway through the crystal's processing, the Shuttle will maneuver to the standard "gravity gradient," or tail to Earth, attitude normally employed during microgravity missions.

Orbital Processing of High Quality Cadmium Zinc Telluride Compound Semiconductors

Principal Investigator:
Dr. David J. Larson Jr.
Northrop-Grumman Corp.
Research and Development Center
Bethpage, NY

This experiment examines the effects of gravity on the growth and quality of alloyed compound semiconductors. This experiment will attempt to produce high quality cadmium zinc telluride crystals with fewer physical defects and more uniform distribution of chemical components than those grown on Earth.

Cadmium zinc telluride is used as a base, or substrate, on which infrared-detecting mercury cadmium telluride crystals are grown. The alloying element, zinc, is added to minimize strain where the two crystals join, thereby reducing defects. The resulting alloy, however, is a relatively soft material which can be deformed during the normal crystal growth process on Earth. These deformations can introduce undesired changes in the arrangement of atoms in the crystal.

By studying space-grown crystals, Dr. Larson can identify the effects of gravity as a factor in causing structural defects in the crystal system. They should be able to predict the distribution of chemical components within a crystal — important information for improving crystal growth technology on Earth.

The cadmium zinc telluride crystal grown during USML-1 was most defect-free where it completely touched the wall of the sample cylinder and where it did not touch the wall at all. Therefore, the primary sample container on USML-2 will be outfitted with a spring-loaded piston, which will move to reduce the volume of the cylinder as the material contracts during cooling. This should eliminate air voids in the crystal and ensure that it maintains even contact with the container wall along its entire surface.

The Study of Dopant Segregation Behavior During the Crystal Growth of Gallium Arsenide (GaAs) in Microgravity

Principal Investigator:
Professor D.H. Matthiesen
Case Western Reserve University
Cleveland, OH

This experiment investigates techniques for uniformly distributing a small amount of selenium within a gallium arsenide crystal as it grows in microgravity.

Electronic devices made from gallium arsenide crystals operate at higher speeds and use less power than computer chips and other semiconductor applications made from silicon. Gallium arsenide is used in high-speed digital circuits, optoelectronic integrated circuits, solid-state lasers, and a variety of other products.

Impurities such as selenium, called dopants, are added to these semiconductor compounds to improve or precisely control their electronic characteristics. To produce high quality gallium arsenide crystals, scientists need to understand the process by which these impurities are distributed within the compound during crystal growth.

Growing the crystals in microgravity will greatly reduce the gravitational influences that cause an uneven distribution of dopants in crystals grown on Earth. This will allow Dr. Matthiesen to identify more subtle influences, either confirming or denying the theories and models used to control crystal growth on Earth.

For the USML-2 experiment, the growing crystal will be marked every 100 to 300 seconds by electric pulsing. The pulses will be time-coded to reveal the microscopic growth rate of the crystal and the shape and location of the liquid/solid boundary, or interface, at the various stages of growth.

Crystal Growth of Selected II-VI Semiconducting Alloys by Directional Solidification

Principal Investigator:
Dr. Sandor Lehoczky

NASA Marshall Space Flight Center
Huntsville, AL

This experiment seeks to confirm theories about how gravity influences the introduction and distribution of structural defects in alloy semiconductors during crystal growth. It will grow an approximately three-quarter-inch-long crystal of mercury zinc telluride, which will be analyzed post-flight to determine its chemical and physical properties.

Mercury zinc telluride is referred to as a II-VI alloy since its components appear in the vertical columns IIb and VIa of the periodic table of elements. The crystals have properties that theoretically make them superior infrared detectors for use in defense, space, medicine and commercial industry. The composition being grown on this mission has potential applications in instruments with diverse purposes ranging from locating and managing petroleum on Earth to studying distant stars and galaxies.

By varying proportions of mercury, zinc and tellurium within the alloy, researchers can modify its electronic and optical properties to meet the needs of a range of applications. However, the growth of large, single crystals of mercury zinc telluride containing a predetermined fraction of each chemical component is hampered by the complexity of the chemistry involved and by the effects of gravity during the growing process. Experiments in microgravity should clarify the role that gravity plays in incorporating the different chemical components into the growing crystal.

Vapor Transport Crystal Growth of Mercury Cadmium Telluride in Microgravity

Principal Investigator:
Dr. Herbert Wiedemeier
Rensselaer Polytechnic Institute
Troy, NY

The USML-2 version of this experiment focuses on the initial phase of vapor crystal growth in a complex alloy semiconductor. Dr. Wiedemeier and his team will grow a crystalline layer of mercury cadmium telluride on a cadmium telluride substrate, or base, by the vapor crystal growth method. The vapor transport method will cause layers, or thin films, of mercury cadmium telluride to be grown on the substrate in a process called epitaxial layer growth. The resulting crystal will be analyzed to determine the effects of microgravity on the growth rate, chemical composition, structural characteristics and other properties of the initial crystalline layer that forms on the substrate.

The similar crystal grown on USML-1 showed considerably improved quality over ground-based crystals. During their follow-up analysis, investigators found new information about the effects of microgravity on formation of the initial layer deposited on the substrate. Therefore, the USML-2 experiment zeros in on that stage of growth that determines the atomic arrangement of the entire crystal.

The performance of infrared detectors made from this material will be greatly improved when electronics manufacturers can grow crystals without structural flaws and with more uniform distribution of chemical components. Better understanding of this crystal growth method will enhance ground based production of similar semiconductor materials and lead to further improvements in techniques for producing crystals using this process.

Zeolite Crystal Growth Furnace
Principal Investigator:
Dr. Albert Sacco
Worcester Polytechnic Institute
Worcester, MA

On USML-2, Dr. Sacco will continue a series of experiments investigating the formation of zeolite crystals, widely used in the chemical process industry as filters, catalysts for reactions, and purifiers. Using the Zeolite Crystal Growth (ZCG) furnace located on the Shuttle's middeck, scientists hope to gain a better understanding of the three-dimensional structure of these crystals, examining techniques for creating large, near-perfect zeolite crystals in microgravity and evaluating new mixtures of zeolite materials which will maximize growth and minimize defects.

Zeolites can act as "molecular sieves" to separate out specific molecules from solutions. They also are active catalysts converting one molecule to another. Zeolites are used in life support systems, petroleum refining, waste management and biomedical fields for purification of fluids. High quality, near-perfect zeolites may one day allow gasoline, oil and other petroleum products to be refined less expensively. Scientists, armed with a better understanding of how zeolites grow and of their crystalline structure, may be able to expand current uses of these crystals.

Thirty-eight zeolite sample containers will be processed during the mission. Each container will be loaded with two solutions — one aluminum-based and one silicon-based. A crew member will mix the solutions on orbit by turning a screw inside each separate sample container. (The proper amount of mixing for different sample containers and mixtures will be dictated by results of Glovebox ZCG mixing tests early in the flight.) The containers then will be placed in the ZCG furnace where they will be heated, allowing crystal growth to begin.

ZCG flew for the first time on USML-1. Results from that flight indicate that crystals whose nucleation and growth was controlled from the onset of the experiment achieved a higher degree of crystal perfection than any crystals produced on Earth.

Glovebox Facility
Project Scientist:
Dr. Donald A. Reiss
NASA Marshall Space Flight Center
Huntsville, AL

The Spacelab Glovebox, provided by the European Space Agency, is a versatile, transparent enclosure where experimenters can test and develop procedures and technologies in microgravity. It enables crew members to handle, transfer, and otherwise manipulate materials in ways that are impractical in the open Spacelab. The facility is equipped with photographic equipment that allows a visual record of experiment operations.

The Glovebox cabinet provides a clean working space and minimizes contamination risks to both the Spacelab and experiment samples. It provides two types of containment for small quantities of materials: physical isolation and a lower air pressure inside the enclosure than that of the Spacelab module. An air-filtering system also protects the crew from harmful experiment products. When an airtight seal is required, crew members can insert their hands into rugged gloves attached to the glove doors. If an experiment requires more sensitive handling, the crew may don surgical gloves and insert their arms through a set of adjustable sleeves.

The Glovebox facility first flew on USML-1. Its working area has been increased for this mission, and lighting has been improved. On USML-2, the following seven investigations will use the facility.

Interface Configuration Experiment
Principal Investigator:
Dr. Paul Concus
University of California – Berkeley
Berkeley, CA

This follow-up to a USML-1 investigation studies the shapes that fluid surfaces assume within specific containers in microgravity. It will observe how colored liquid settles to equilibrium within two different shapes of clear plastic containers.

Currently, the behavior in microgravity of free liquid-vapor interfaces, such as the way liquid propellant moves within spacecraft fuel tanks, cannot be predicted satisfactorily. Since many on-orbit operations involve fluids and depend on their behaviors, it is important to test and refine the models used to predict how container shape can affect the location and shape of fluid surfaces.

Oscillatory Thermocapillary Flow Experiment
Principal Investigator:
Dr. Yasuhiro Kamotani
Case Western Reserve University
Cleveland, OH

This investigation, also a USML-1 follow-up, complements the Surface Tension Driven Convection Experiment. It studies the conditions for the onset of oscillations, or periodic variations, in surface-temperature-induced fluid flows. Heat will be applied to silicone oil in four vessels of different volumes and depths to determine how container dimensions affect the onset of oscillations.

On Earth, thermocapillary flows (those generated by temperature variations along a free liquid surface) begin to oscillate under certain conditions. Both the flows themselves and the oscillations may reduce the purity and uniformity of crystal growth solutions and molten metals. By studying the conditions present when oscillations begin in microgravity and by comparing them to onset conditions present on Earth, scientists should be able to determine the cause of the oscillations.

Fiber Supported Droplet Combustion
Principal Investigator:
Dr. Forman A. Williams
University of California – San Diego
San Diego, CA

This new Glovebox investigation tests a technique for studying combustion in microgravity. Droplets of different types of fuel will be suspended on a thin fiber, then ignited. Team members will observe the shape of the flame, how the flame grows and how fast it shrinks as it consumes the fuel.

Droplet combustion studies are very difficult to perform on Earth. Drops burn unevenly because gravity causes high-density drops to sink and buoyancy-induced acceleration forces combustion products to rise. In space, the drop is expected to assume a symmetrical sphere shape and thus burn more evenly, making it easier to validate combustion theories. If successful, this new technique for studying droplet combustion could provide insight into fundamental combustion processes, such as how pollutants are formed.

Protein Crystal Growth – Glovebox
Principal Investigator:
Dr. Larry DeLucas
Center for Macromolecular Crystallography
Birmingham, AL

This repeat of the highly successful USML-1 protein crystal growth Glovebox experiments will help confirm the advantages of crew interaction in the process of growing protein crystals in microgravity.

Protein crystals, important for analyzing the molecular structure of these "building blocks of life," are very difficult to produce. This experiment allows a crew member to modify protein crystal growth conditions such as mixing procedures, crystal seeding, crystal mounting and crystal preservation, based on his observations of previous sets of investigations.

On USML-1, these modifications resulted in several crystals of much higher quality than had ever been grown before. In addition to improving the quality of crystals grown on this mission, USML-2 Glovebox PCG research will be applied to improve protein crystal growth procedures on future Shuttle missions and on the Space Station.

Zeolite Crystal Growth – Glovebox
Principal Investigator:
Dr. Albert Sacco, Jr.
Worcester Polytechnic Institute
Worcester, MA

This Glovebox investigation extends the USML-1 evaluation of on-orbit mixing procedures for zeolite crystal growth experiments.

Zeolite crystals are used as catalysts and filters in the chemical processing industry. To produce usable crystals, the growth solutions must be precisely mixed. USML-1 crew members' involvement in the mixing process resulted in more uniform mixing and helped minimize bubble formation. The USML-2 experiment will provide additional mixing information to researchers using the Zeolite Crystal Growth Furnace facility.

Colloidal Disorder-Order Transitions
Principal Investigator:
Dr. Paul Chaikin
Princeton University
Princeton, NJ

This new Glovebox investigation looks at a fundamental question in condensed matter physics: how the density of a substance finely and uniformly dispersed within another substance of a different phase — a mixture called a colloid — affects its transition from a liquid to an ordered solid phase.

For this experiment, several containers will hold different concentrations of fine solid spheres suspended in a liquid. Dr. Chaikin will observe which concentration of spheres is dense enough that they arrange themselves in an ordered state, rather than remaining randomly distributed within the liquid.

A better understanding of what happens at the boundary between solid and liquid states of a colloid should help researchers improve materials processing methods on Earth, as well as in microgravity.

Particle Dispersion Experiment
Principal Investigator:
Dr. John Marshall
NASA Ames Research Center
Moffett Field, CA

This investigation, another follow-up from USML-1, uses the microgravity environment to study how fine natural particles, such as dust, disperse within an atmosphere, then assemble back together (or reaggregate) into larger clusters. A short puff of air will disperse sand particles within a small, transparent container. Dr. Marshall will observe how they cluster in an environment free from the interference of gravity.

In addition to helping scientists understand how planetary atmospheres are cleansed of dust injected by volcanic eruptions, meteorite impacts or dust storms, the experiment tests technologies for future Shuttle and Space Station experiments concerned with the dispersion of aerosols.

The USML-1 investigation successfully demonstrated the effectiveness of methods for dispersing, redispersing and studying the clustering of particles caused by electrical interparticle forces. Electrical fields formed around some of the larger particle clusters. If "giant" electrical fields actually occur in the natural environment, they could have a significant impact on the way dense dust clouds are dispersed.

Protein Crystal Growth Experiments

A record number of protein crystal growth experiment facilities aboard USML-2 will be used to produce large, well-ordered crystals of various proteins under controlled conditions in microgravity. The crystals will be used in ground-based studies to determine the molecular structure of each protein.

Proteins play important roles in daily life, from providing nourishment to fighting disease. Because a protein's structure determines its function, expanding knowledge of the structures of proteins has potential benefits to many areas of biotechnology — the use of advanced techniques to improve the quality of biological products. These benefits include new information on basic biological processes, development of food crops with higher protein content and increased resistance to disease, and basic research toward the development of more effective drugs.

For many crystals, those grown in microgravity show a more uniform and highly ordered structure with fewer defects than are found in crystals of the same proteins produced on Earth.

The protein crystal growth experiments on USML-1 were very successful. Of the more than 30 protein crystals flown, nearly half produced crystals that were large enough for X-ray diffraction analysis.

Canavalin, a plant protein, formed some of the largest crystals of that protein ever grown (more than 2.0 millimeters long). Crystals of Human Proline Isomerase, a protein associated with transplant rejection and a target of drug designers, yielded the highest quality data ever collected on the protein.

Large, well-formed crystals of proteins important to immune disorder studies also were grown. This included HIV Reverse Transcriptase Complex, a protein important in the design of drugs to fight AIDS. The three-dimensional structure of Factor D, a protein that plays a role in complications including inflammation after open-heart surgery, was completed using the high-quality crystals obtained on USML-1.

The variety of protein crystal growth experiment facilities on USML-2 reflects the progress made in this field over almost a decade of space experiments. Growth methods and facility design are continually refined and upgraded, based on results from previous flights.

Single-Locker Protein Crystal Growth — Two Methods
Principal Investigator:
Dr. Daniel Carter
NASA Marshall Space Flight Center
Huntsville, AL

This experiment will process more than 800 protein samples in a facility designed for the production of crystals with enhanced internal order. The Protein Crystallization Apparatus for Microgravity (PCAM) holds more than six times as many samples as are normally accommodated in the same amount of space.

The PCAM will grow crystals using the vapor diffusion method, which has been highly effective in previous Shuttle experiments. In vapor diffusion, liquid evaporates from a protein solution and is absorbed by a reservoir solution contained in a wicking material. As the protein concentration rises, the proteins form crystals.

Twelve PCAM cylinders — each holding 63 samples for a total of 756 — will be held in two temperature controlled enclosures, the Single-locker Thermal Enclosure System, each occupying a single Shuttle mid-deck locker. The enclosures will maintain temperatures at 72 degrees Fahrenheit (22 degrees Celsius).

Eight Short PCAMs, containing precipitation ("salt") solutions, will be in an ambient-temperature stowage locker. They will be analyzed to determine the rate at which the vapor diffusion process proceeds in the diffusion-limited environment of microgravity.

To start the PCAM experiments, a crew member will open the front of the enclosure, then rotate a shaft on the end of the cylinder with a ratchet from the Shuttle's tool kit. This will allow diffusion to start and protein crystal growth to begin. Near the end of the mission, a crew member will rotate the shaft in the opposite direction to stop diffusion.

A new experiment chamber called the Diffusion-controlled Crystallization Apparatus for Microgravity (DCAM) also will be tested. It will be housed within a Single Locker Thermal Enclosure System inside the Spacelab module. There will be 81 DCAMs containing protein samples in this enclosure. The experiment will grow model proteins by a combination of the liquid-liquid diffusion and the dialysis methods of protein crystal growth. This is a newly developed method by NASA scientists to passively control the crystallization process over extended periods of time. The space-grown proteins will be compared with those grown by the same method on the ground. The experiment is a precursor for long-duration crystallization experiments aboard the international Space Station and Mir, which would benefit greatly from the ability to control crystal growth times of up to approximately six months in length.

Crystal Growth by Liquid-Liquid Diffusion
Principal Investigator:
Dr. Alexander McPherson, Jr.
University of California – Riverside
Riverside, CA

Four Handheld Diffusion Test Cell units containing four test cells each will grow protein crystals by diffusing one liquid into another. In liquid-liquid diffusion, different fluids are brought into contact but not mixed. Over time, the fluids will diffuse into each other through random motion of molecules. The gradual increase in concentration of the precipitant within the protein solution causes the proteins to crystallize. Liquid-liquid diffusion is difficult on Earth because differences in solution densities allow mixing by gravity-driven thermal convection. In addition, the greater density of the crystals allows them to settle into inappropriate parts of the cell.

The end of the test cells, where crystals will grow, and the containment housing are made of clear plastic. Crew members will remove the units from stowage after launch and place them where they can photograph the growing crystals periodically during the mission.

Each test cell has three chambers: protein solution, buffer solution, and precipitant solution. The buffer solution chamber cuts across the width of a shaft between protein and precipitant solutions. Before the experiment, a valve is positioned so each fluid is isolated from the others. A crew member will activate the experiment by rotating the valve 90 degrees, so the buffer contacts the protein and precipitant and the three form a single volume. The rotating valve minimizes liquid movement, limiting alteration of the liquids' shapes and volumes. When the three liquids are in contact, they will slowly diffuse into each other. The crew will close the valves before return to Earth.

Commercial Protein Crystal Growth
Principal Investigator:
Dr. Larry DeLucas
Center for Macromolecular Crystallography
Birmingham, AL

This experiment will grow large quantities of crystals of various proteins using the batch process method.

A Protein Crystallization Facility will be housed in a commercial refrigeration/ incubation module in the Orbiter middeck. The facility contains four cylindrical crystallization chambers which will be kept at 104 degrees Fahrenheit (40 degrees Celsius) until the Shuttle reaches orbit. Then, they will be gradually cooled to 72 degrees Fahrenheit (22 degrees Celsius) over a 100-hour period. The temperature change initiates crystal growth. Crystals form as the chamber cools, and crystal growth continues at 72 degrees for the remainder of the mission.

The experiment also will grow additional crystals in a Vapor Diffusion Apparatus located in a 39-degree-Fahrenheit (4-degree-Celsius) refrigerator/ incubation module.

Advanced Protein Crystallization Facility
Project Scientist:
Dr. Gottfried Wagner
University of Giessen
Giessen, Germany

This facility is the first ever designed to use three methods of protein crystal growth: liquid-liquid diffusion, in which a protein solution and a salt solution are separated by a buffer and allowed to mix together slowly once in orbit; dialysis, with protein and salt solutions separated by a membrane; and vapor diffusion, where crystals form inside a drop of protein solution as solvent from the drop diffuses into a reservoir. Developed by the European Space Agency, the facility flew once before on the second International Microgravity Laboratory mission in June 1994.

Video images will be made of crystals as they form. After the mission, the images will allow investigators to study the history of crystal development in microgravity. Scientists are interested particularly in why and how crystals nucleate and begin to form crystals.

Crystallization of Apocrystacyanin C
Principal Investigator:
Dr. Naomi Chayen
Imperial College
London, England

This protein is a member of the lipocalin family of proteins, which binds to certain pigments that are widely distributed in plants and animals. Knowledge of the structure of lipocalins will help scientists to alter these proteins to produce carriers that will bind more strongly to the pigment crocetin, which has anti-cancer properties.

Crystal Structure Analysis of the Bacteriophage Lamda Lysozyme
Principal Investigator:
Dr. Jean-Paul Declercq
Catholic University of Louvain
Belgium

The bacteriophage Lambda lysozyme is a small protein of 158 amino acids involved in the dissolution of the cell walls of bacteria. Investigators are seeking information about the method of destruction employed by this organism.

Crystallization of RNA Molecules Under Microgravity Conditions
Principal Investigator:
Dr. Volker Erdmann
Free University of Berlin
Germany

Ribonucleic acid (RNA) molecules have diverse biological roles, which include carrying genetic information for protein synthesis within living cells. They may also exhibit behavior characteristic of enzymes. Because of the large mass of its molecules, RNA has been extremely difficult to synthesize on Earth.

Crystallization of the Protein Grb2 and Triclinic Lysozyme
Principal Investigator:
Dr. Arnaud Ducruix

Centre National De La Recherche Scientifique
Universite de Paris Sud, France

Grb2 is an adapter protein involved in the transfer of signals from one cell to another. Investigators expect that space-grown crystals will have better resolution than those which have been grown and analyzed in Earth-based labs.

Lysozyme crystals grown in the APCF during the second International Microgravity Lab flight had a much higher level of perfection than those grown on earlier missions. USML-2 investigators want to extend the study to another crystalline structure of lysozyme, expecting to reach even better resolution values.

Microgravity Crystallization of Thermophilic Aspartyl-tRNA Synthetase and Thaumatin
Principal Investigator:
Dr. Richard Giegé
Centre National De La Recherche Scientifique
Strasbourg, France

Investigators will continue and expand the IML-2 crystallization studies on thermophilic aspartyl-tRNA synthetase and will crystallize the plant-sweetening protein, thaumatin.

While both proteins are biochemically stable and are purified easily, they also have significant structural and behavioral differences. Therefore, they make interesting subjects for comparative crystallography studies.

In addition, thaumatin tastes extremely sweet when consumed by humans. Since it appears to be non-toxic, non-carcinogenic and low in calories, it may be a good sugar substitute.

Crystallization in Space of Octarellins, de novo Designed (alpha/beta)-Barrell Proteins, and of a Mutated Human TIM Forming a Monomeric (alpha/beta)-Barrell Structure
Principal Investigator:
Dr. Joseph Martial
University of Liège
Belgium

The long-term goal of investigators is to design a three-dimensional "scaffold" on which to build amino-acid bonds, eventually producing therapeutic agents for the treatment or prevention of disease. Before this can be accomplished, more knowledge is needed about rules governing protein folding and structure stabilization. Resolution of the three-dimensional structure of crystals of the synthetic protein octarellin may provide this information.

Crystallization in a Microgravity Environment of CcdB, a Protein Involved in the Control of Cell Death

Principal Investigator:
Dr. Lode Wyns
Free University of Brussels
Belgium

Clarification of the structure and mode of action of this protein may lead to design of new antibiotics and anti-tumoral drugs. In this experiment, scientists want to improve crystal quality and produce crystals of two specific mutants, which have not produced crystals large enough for data collection on Earth.

A Multivariate Analysis of X-ray Diffraction Data Obtained from Glutathione S Transferase
Principal Investigator:
Dr. Lennart Sjölin
University of Göteborg
Sweden

This experiment will perform extensive comparative analysis of X-ray data from space-grown crystals and ground-based controls to provide a statistical comparison of the two. This will give scientists statistically significant data to either confirm or refute various hypotheses about the value of a convection-free environment for enhanced crystal quality.

Protein Crystal Growth: Light-driven Charge Translocation Through Bacteriorhodopsin
Principal Investigator:
Dr. Gottfried Wagner
University of Geissen
Germany

This protein converts light energy to voltages in the membrane of photoenergetic micro-organisms. High quality bacteriorhodopsin crystals are difficult to grow on Earth because the crystalline clusters show structural disorder and loose bundling. These crystals grown in the APCF during IML-2 had a much higher level of perfection, and for the first time in microgravity showed a precise tendency to form as cubes. Resolution of the three-dimensional structure of bacteriorhodopsin will help scientists understand the mechanisms used to convert light energy to energy for growth.

Crystallization of Ribosomes
Principal Investigator:
Dr. Ada Yonath
Max-Planck Laboratory for Ribosomal Structure
Hamburg, Germany

Ribosomes are responsible for the translation of genetic code to proteins. While they are the only portion of living cells to have been crystallized, most Earth-grown crystals are very thin and crack on handling, making it very difficult to collect and evaluate data.

As APCF growth chambers are almost tailor-made for growing this type of protein, this experiment could result in crystals of improved internal order, shape, size and mechanical properties. The facility also may allow scientists to control specific properties of the crystal's structure and form.

Crystallization of Sulfolobus Solfataricus Alcohol Dehydrogenase
Principal Investigator:
Dr. Adriana Zagari
University of Naples
Italy

Alcohol dehydrogenase (ADH) is an enzyme that occurs in large amounts in the livers of mammals, where it plays an important role in several physiological functions including the breakdown of alcohol. However, mammalian ADH is unstable at high temperatures or in the presence of organic solvents, properties that limit its usefulness for the synthesis of organic compounds. On the other hand, ADH from the bacterium Sulfolobus solfataricus has greater thermal stability and is scarcely affected by the presence of organic solvents. Given these properties, the enzyme is a good candidate for industrial applications.

Crystallization of Turnip Yellow Mosaic Virus, Tomato Aspermy Virus, Satellite Panicum Mosaic Virus, Canavalin, Beef Liver Catalase, Concanavalin B
Principal Investigator:
Dr. Alexander McPherson
University of California
Riverside, CA

Canavalin, catalase and concanavalin B are being studied to determine the effects of microgravity on protein crystal growth by evaluating their size, habit, quality, defects and diffraction properties.

Three viruses — very large proteins — are being studied to verify the theory that the effect of altered transport properties in microgravity should be magnified in proportion to the decreased diffusivity of such large molecules.

Crystallization of the Epidermal Growth Factor (EGF) Receptor
Principal Investigator:
Dr. Wolfgang Weber
University of Hamburg
Germany

The receptor for epidermal growth factor is increasing in its importance as a predictor for a series of human malignancies. Knowledge of its three-dimensional structure would open the possibility of tailoring drugs to treat numerous types of tumors. At present, though, the crystal structure of only one hormone receptor (growth hormone) and none of the growth factor receptors has been solved.

Structure of the Membrane-Embedded Protein Complex Photosystem I
Principal Investigator:
Dr. Wolfram Sänger
Free University of Berlin
Germany

This protein complex is one of two responsible for the primary conversion of visible light into chemical energy in water-oxidizing photosynthesis. This experiment aims to identify the complete arrangement of chlorophyll molecules that perform this conversion process in the most efficient way.

Crystallization of Visual Pigment Rhodopsin
Principal Investigator:
Dr. Willem de Grip
University of Nijmegen
The Netherlands

Visual pigments like rhodopsin are the primary photoreceptor proteins for a variety of light-regulated processes, such as vision and photoperiodic reproduction. Analysis of the protein crystals is needed if scientists are to unravel the molecular mechanisms responsible for these processes.

Commercial Generic Bioprocessing Apparatus
Principal Investigator:
Dr. Louis Stodieck
Center for Bioserve Space Technologies
University of Colorado
Boulder, CO

The Commercial Generic Bioprocessing Apparatus (CBGA) is a tool which allows a variety of sophisticated bioprocessing experiments to be performed in one piece of hardware.

Many of the experiments which will be processed in the CGBA have applications that could improve life on Earth while providing solutions to issues related to extended stays in space.

Each experiment is housed in a glass tube called a Fluid Processing Apparatus (FPA). Groups of eight FPAs are packaged together so they can be activated simultaneously by turning a crank on the activation pack, and a number of activation packs are being flown on this mission. Each FPA tube holds a neutral storage medium and the sample, an experiment activator that initiates bioprocessing, and a termination fluid that fixes the experiment for post mission analysis. The fluids are separated by rubber stoppers. Once on orbit, a crew member mixes the samples and places them in an incubator for a preprogrammed period. Processing is terminated automatically. Samples will be removed and stored, some in the Spacelab module and others in middeck lockers, for the trip home.

The CGBA flew for the first time on USML-1. On that mission, biomedical experiments included investigations into how the human body fights disease, how infectious organisms like bacteria can be controlled, and how bacteria can be

effectively used to treat waste and recover water — information vital for long space flights. There were experiments that investigated how cells and molecules develop and grow in reduced gravity, as well as seed germination experiments and experiments that looked at the microgravity effects on plant and animal development.

Major areas of investigation on USML-2 include:

Biomedical Testing and Drug Development

These experiments will help researchers develop a better understanding of how microgravity affects bone metabolism, the immune system and the neuromuscular system.

Information gleaned from these experiments may help scientists understand the changes caused by exposure to microgravity in order to develop new drugs for the possible treatment of diseases such as cancer, osteoporosis and AIDS.

Ecological Test Systems

This group of investigations will study plant development and the relationships between bacteria and plants in microgravity. Such knowledge is crucial for extended stays in space where plants will be used as both a food source and a means of purifying air.

The experiments will examine how controlled agricultural applications, waste management processes and methods of controlling microbes affect plant seeding, seed germination, plant development and bacterial products and processes of plants.

Biomaterials Products and Processes

These experiments will study the growth of bacteria in microgravity, investigate new pharmaceutical products and delivery systems, and study materials that might be used as replacements for skin, tendons, blood vessels and corneas.

Scientists hope to glean important information on how bacteria grow in the absence of gravity-driven fluid flows, as well as gaining insight on how to grow structures that can deliver drugs directly to cells. These investigations also will provide important information on models for potential implants, such as synthetic skin for burn victims.

Astroculture Facility and Experiment
Principal Investigator:
Dr. Raymond J. Bula
Wisconsin Center for Space Automation & Robotics
Madison, WI

The Astroculture facility is an apparatus used for growing plants in microgravity. There are two USML-2 objectives for Astroculture. 1) The facility's three main subsystems will be tested to verify the apparatus as an effective on-orbit plant growth system, and 2) the facility will be used to investigate the nature of starch accumulation in microgravity.

Because plants will play an important role in future long-duration space flights, providing crews with oxygen, food, pure water and assisting in removing carbon dioxide from space habitats, it is important to develop an effective plant growth facility. USML-2 will evaluate the facility's plant watering and nutrient-delivery system, humidity control and plant illumination subsystems.

The plant watering system must be able to deliver nutrients to the plants without releasing solutions into crew quarters. The Astroculture facility on USML-2 will test the effectiveness of a delivery system using porous tubes with different pressures to ensure a proper flow to the plants' roots.

Another requirement of the facility is successful humidity control. Air moisture must remain at levels that do not damage experiments and equipment, while maintaining desired humidity levels to plants. The moisture in the air also may be recycled as condensed water for cooking, drinking or as a source of water for plants. On USML-2 the system will humidify and dehumidify the air without needing a gas/liquid separator to recover the condensed water. All current systems in use must supply a separator.

The third requirement for a reliable plant growth system is efficient use of lighting, since electrical power is at a premium on Shuttle flights. The lighting subsystem tested on USML-2 uses light emitting diodes (LEDs) providing high levels of light within the limits of electrical power available on orbit. Its energy conversion capability makes it superior even to fluorescent or sodium lamps. It also provides greater safety than any other light sources currently used by space-based plant growth facilities.

During USML-2, small potatoes will be grown from potato leaf cuttings that can be induced to develop small tubers filled with starch in 10 to 15 days. Starch is an important energy storage compound in plants, and there are indications that starch accumulation in plants is restricted in microgravity. The crew will periodically monitor the status of the environment in the Astroculture plant chamber and the development of the potato plants. Video of the plants will be downlinked periodically during the mission. Post-mission evaluation of data will focus on rates of photosynthesis, movement of photosynthesis products from leaves to tubers, conversion of sugars to starch in storage organs, and enzyme activities for the formation and degradation of starch. Investigators also will study the number, size, shape and distribution of starch grains and the structures that form starch.

The Astroculture equipment has previously flown on the USML-1, and SPACEHAB 1, 2 and 3 missions. During these flights lighting, humidity, acidity-alkalinity balance (pH), nutrient supply and composition, and carbon dioxide and atmospheric contaminant subsystems were successfully evaluated. Technology progress from previous flights has resulted in several commercial products for use on Earth. The

lighting subsystem has provided technology to develop a unique lighting system for photosynthesis research and for use in some medical applications. Other commercial products from Astroculture technology include dehumidification/humidification units, water-efficient irrigation systems and energy-efficient lighting systems for large scale commercial nurseries.

After flight qualification on USML-2, the plant growth facility will be available for sale or lease to commercial enterprises. The project is part of a cooperative experiment with the Secondary Payload Programs of NASA's Office of Life and Microgravity Sciences and Applications.

Measuring Microgravity

Whether on Earth or in space, any change in motion produces accelerations, or gravity. An astronaut exercising on the Space Shuttle, for instance, can cause the Orbiter to vibrate in response to the activity taking place inside it, creating gravity. Experiments on the Shuttle need a very stable microgravity environment so their delicate operations will not be disturbed. But with essential activities such as astronauts living and working on the Shuttle, Orbiter maneuvers, and antenna motions, absolute stability is impossible to achieve. Therefore, to interpret results correctly and to develop an understanding of the effects caused by these forces, investigators need to know the precise strength of gravitational influences and vibrations affecting their experiments. USML-2 will include three facilities to measure different types of accelerations, and it will test a device that could be used to isolate sensitive experiments from disturbances.

Space Acceleration Measurement System

Project Manager:
Ron Sicker
NASA Lewis Research Center
Cleveland, OH

The Space Acceleration Measurement System is a facility that measures the acceleration environment of the Spacelab module using three sensor heads to record accelerations over a specific range of frequencies. Sensors located on the Surface Tension Driven Convection Experiment, the Crystal Growth Furnace and the Glovebox will be connected by cables to a control and data storage unit in the Spacelab center aisle.

Data from SAMS will be used to determine what effect crew movements, equipment operations and Shuttle maneuvers can have on the experiments being conducted on USML-2. Scientists will analyze the data post-flight to determine that a disturbance took place at a particular time. They can then make allowances for the disturbance as they analyze their experiment data.

Three Dimensional Microgravity Accelerometer

Principal Investigator:
Jan Bijvoet

University of Alabama, Huntsville
Huntsville, AL

The Three Dimensional Microgravity Accelerometer (3DMA) apparatus will take two kinds of measurements on USML-2: the absolute level of microgravity acceleration, (the differences between zero acceleration and what is experienced during the mission), and microvibrations which could affect the investigations onboard. Using these two measurements, scientists can know the acceleration effects any time during their experiments.

Located in the central housing of the 3DMA hardware are three accelerometers which measure the level of absolute microgravity in three separate axes or directions. Three remote sensors will record the different vibrations and accelerations caused by experiment and Orbiter operations.

The data will be recorded in the central 3DMA unit for post-mission analysis. It will also be sent to the ground in real time. This will allow scientists to call up displays to view measurements of absolute gravity and microvibrations at the same time. The absolute level of microgravity and the data from the three remote sensors will allow quantification of disturbances.

Orbital Acceleration Research Experiment
Porject Manager:
Jose L. Christian, Jr.
NASA Lewis Research Center
Cleveland, OH

The Orbital Acceleration Research Experiment (OARE) is managed by Lewis Research Center as part of NASA's Microgravity Measurements and Analysis Project. Located outside the Spacelab, the OARE acceleration instrument will measure microgravity levels caused by atmospheric drag of the Shuttle, changes in Orbiter velocity and vibrations of onboard machinery, as well as Shuttle and crew operations.

Data from OARE will complement information gathered from the SAMS instrument. While SAMS data on Shuttle accelerations will be analyzed post-mission, high-resolution data from the sensitive OARE instrument will be sent real-time to the ground. This will give scientists an opportunity to make on-the-spot adjustments to their experiments to account for the on-orbit disturbances.

Suppression of Transient Accelerations By Levitation Evaluation
Project Scientist:
Dr. Gerald Nurre
Marshall Space Flight Center
Huntsville, AL

The Suppression of Transient Accelerations By Levitation Evaluation (STABLE) will

test a device designed to isolate a small science experiment from high-frequency accelerations, including Shuttle operations and crew activity.

The entire device fits into a single locker space in a Spacelab rack, the bottom of the locker serving as the base of the isolator. The platform is suspended from the base in the center of the locker by three electromagnetic actuators, mechanisms which move and control the platform. Each actuator is composed of a magnet, permanently attached to the platform, and a coil assembly, bolted to the base. Accelerometers are mounted both on the platform and the base, providing feedback of acceleration measurements through a feedback controller, also contained in the locker. This feedback allows position sensors to locate the platform with respect to the base and are used to maintain the platform near its centered position, thus producing a microgravity environment on the platform.

High-Packed Digital Television Technical Demonstration

This is the first flight demonstration of a new digital television system to operate from the Spacelab. It will provide researchers on the ground with up to six channels of video which can be transmitted simultaneously from orbit. Previously, only one video channel at a time could be sent down, or downlinked, limiting the accessibility of video data from experiments and other activities. Experiments requiring live video for analysis by ground teams had to be scheduled at different times.

The new six-channel system will increase science return from the USML-2 mission, since a number of science teams will be able to monitor and modify operation of their experiments simultaneously. The HI-PAC TV technology will serve the remaining Spacelab missions and will extend well into the Space Station era.

Using the Spacelab's high-rate data system, HI-PAC converts standard analog video signals into digital signals, compressing the signal and downlinking it the same way as other digital data. When the signals are received on the ground, the digital data will be converted back into analog signals, then distributed to scientists for viewing on monitors in the science operations area.

STUDENTS PARTICIPATE IN MISSION INVESTIGATIONS

During STS-73, students at four sites will interact with the astronauts to discuss and compare onboard microgravity experiments with similar, ground-based experiments. The goal is to involve students as participants in Shuttle investigations in an effort to generate excitement in physical science and chemistry.

The first live downlink with students is currently scheduled for flight day 12. Middle school students at the following sites will discuss mixing and crystal growth experiments with the Shuttle crew.

1. Museum of the Rockies, Bozeman, MT. Mixing and sedimentation.

2. Sierra Middle School, Las Cruces, NM. Crystallization experiments.

The second live downlink is scheduled for flight day 13. High school students from the following sites will discuss fluids and combustion experiments:

1. South High School, Worcester, MA. Fluid experiments.

2. Louisville Science Center, Louisville, KY. Combustion experiments.

Prior to the mission, NASA's education specialists visited the sites to work with students on their experiments.

A pre-flight education video of the STS-73 crew conducting the ground-based experiments and an accompanying "Microgravity Teacher's Guide with Activities for Physical Science" are available through the NASA Teacher Resource Center network.

Teachers can access copies of the ground-based activities through the "Hot Topics" section in SPACELINK, NASA's electronic network for educators. These experiments use affordable and easily acquired materials. For this and other information, SPACELINK can be accessed via modem line (205) 895-0028; WWW address http://spacelink.msfc.nasa.gov; and Telnet, Gopher and Anonymous FTP address spacelink.msfc.nasa.gov.

STS-73 CREW BIOGRAPHIES

Navy Commander **Kenneth D. Bowersox,** 38, will lead the seven-member STS-73 crew during its 16-day mission in space.

Bowersox was born in Portsmouth, VA, but considers Bedford, IN, to be his hometown. He received a bachelor's degree in aerospace engineering from the United States Naval Academy in 1978, and a master's degree in mechanical engineering from Columbia University in 1979.

Bowersox received his commission in the Navy in 1978 and was designated a Naval Aviator in 1981. He was then assigned to Attack Squadron 22 aboard the USS Enterprise. Following graduation from the United States Air Force Test Pilot School at Edwards Air Force Base, CA, in 1985, he moved to the Naval Weapon Center at China Lake, CA.

Bowersox was selected as an astronaut candidate in June 1987. Since then he has held a variety of technical assignments including flight software testing in the Shuttle Avionics Integration Laboratory; technical assistant to the director of flight crew operations; chief of the Astronaut Office Safety Branch; and spacecraft communicator in the Mission Control Center. A veteran of two space flights, Bowersox has logged more than 591 hours in space.

His first flight, STS-50 in June/July 1992, was the first flight of the U.S. Microgravity Laboratory. Over a two-week period, crew members conducted a variety of experiments in materials processing and fluid dynamics in weightlessness. At that time, STS-50 was the longest Shuttle flight to date. Bowersox's second flight was as pilot of STS-61 in December 1993 which featured the servicing of the Hubble Space Telescope. During the 11-day mission, crew members conducted a record five spacewalks to restore the telescope to its full operating capacity.

Colorado native and Navy Commander **Kent Rominger**, 39, will be making his first Shuttle flight on STS-73.

Born in Del Norte, CO, Rominger received a bachelor's degree in civil engineering from Colorado State University in 1978 and a master's degree in aeronautical engineering from the U.S. Naval Postgraduate School in 1987. Rominger received his commission through the Aviation Reserve Officer Candidate Program in 1979 and was designated a Naval Aviator in September 1980. Following training in the F-14 Tomcat, he was assigned to Fighter Squadron Two and attended the Navy Fighter Weapons School. In 1987, he completed Naval Postgraduate School/Test Pilot School Cooperative Program, and was assigned as the F-14 Project Officer to the Carrier Suitability Branch of the Strike Aircraft Test Directorate at Patuxent River, MD. During his tour of duty, he completed initial carrier suitability sea trials of the F-14B, logging the first aircraft carrier assessment and catapult launch in the upgraded Tomcat. In 1990, he reported to Fighter Squadron 211 where he served as Operations Officer and completed a Desert Storm Deployment of the Arabian Gulf aboard the USS Nimitz.

Rominger was selected as an astronaut candidate in 1992. He has since completed his candidate training and has been working technical issues for the Astronaut Office Operations Development Branch.

Three-time Shuttle veteran **Kathryn Thornton**, Ph.D., 43, will serve as Payload Commander and Mission Specialist 3 for the USML-2 mission. A native of Montgomery, AL, Thornton received a bachelor's degree in physics from Auburn University in 1974 as well as a master's degree and doctorate in physics from the University of Virginia in 1977 and 1979, respectively.

After receiving her doctorate degree, Thornton was awarded a NATO Postdoctoral Fellowship to continue her research at the Max Planck Institute for Nuclear Physics in Heidelberg, West Germany. She then returned to Charlottesville, VA, where she was employed as a physicist at the US Army Foreign Science and Technology Center.

Thornton completed her initial training as a NASA astronaut in 1985, and since then has logged more than 593 hours in space, including more than 21 hours of extravehicular activity.

Her first flight, in November 1989, was a five-day mission sponsored by the Department of Defense. Her second flight in May 1992 was aboard the maiden voyage of the Space Shuttle Endeavour on a mission to retrieve, repair and redeploy the International Telecommunications Satellite (INTELSAT), and to demonstrate and evaluate numerous EVA tasks to be used for the assembly of a space station. During that mission, Thornton and fellow crew member Tom Akers conducted a seven hour, 45 minute spacewalk.

On her third flight, Thornton was part of the team that conducted five spacewalks to service and repair the Hubble Space Telescope. During the December 1993 mission which lasted 11 days, Thornton performed two of the spacewalks, spending more than 13 EVA hours.

Air Force Captain **Catherine Coleman**, Ph.D., 34, will be making her first space flight as Mission Specialist 1 during STS-73.

Born in Charleston, SC, Coleman received a bachelor's degree in chemistry from the Massachusetts Institute of Technology in 1983, and a doctorate in polymer science and engineering from the University of Massachusetts in 1991.

Coleman was commissioned as a 2nd lieutenant in the Air Force in 1983 and began graduate work at the University of Massachusetts. In 1988, she entered active duty and was assigned to Wright-Patterson Air Force Base as a research chemist. She did research on new polymer materials and acted as a surface analysis consultant for the Long Duration Exposure Facility. In addition to assigned duties, Coleman was a volunteer test subject for the centrifuge program at the Crew Systems Directorate of the Armstrong Aeromedical Laboratory. She set several endurance and tolerance records during her participation in physiological and new equipment studies.

Coleman was selected as an astronaut in 1992. Her technical assignments have since included working in the Astronaut Office Mission Support Branch and for flight software verification in the Shuttle Avionics Integration Laboratory.

Also making his first flight as Mission Specialist 2 is Navy Lieutenant Commander **Michael Lopez-Alegria**.

Lopez-Alegria, 37, was born in Madrid, Spain, and considers both Madrid and Mission Viejo, CA, to be his hometowns. He earned a bachelor's degree in systems engineering from the U.S. Naval Academy in 1980, and a master's degree in aeronautical engineering from the U.S. Naval Postgraduate School in 1988.

Lopez -Alegria was designated a naval aviator in 1981. He then served as a flight instructor in Pensacola, FL, until March 1983. His next assignment was to a fleet electronic reconnaissance squadron in Rota, Spain, where he served as a pilot and mission commander aboard EP-3E aircraft, flying missions in the Mediterranean Sea, North Atlantic, Baltic Sea and Central America. In 1986, he was assigned to a two-year cooperative program between the Naval Postgraduate School in Monterey, CA, and the U.S. Naval Test Pilot School in Patuxent River, MD. His final tour before being assigned to NASA was at the Naval Air Test Center as an engineering test pilot and program manager.

Lopez-Alegria also was selected as an astronaut in 1992, and has worked with the Space Shuttle Orbiter, Main Engine, Solid Rocket Booster and External Tank projects.

The crew roster for STS-73 also includes two Payload Specialists -- **Fred Leslie**, Ph.D., from the Marshall Space Flight Center, and **Albert Sacco, Jr.**, Ph.D., from Worcester Polytechnic Institute.

Leslie, 43, was born in Ancon, Panama. He received a bachelor's degree in engineering science from the University of Texas in 1974, and a master's and doctorate degrees in meteorology with a minor in fluid mechanics from the University of Oklahoma in 1977 and 1979, respectively.

After earning his doctorate, Leslie served as a post doctoral research associate at Purdue University studying fluid vortex dynamics. In 1980, he worked for the Universities Space Research Association as a visiting scientist at the Marshall Space Flight Center.

Since 1983, Leslie has served as a co-investigator for the Geophysical Fluid Flow Cell experiment which flew on the Spacelab 3 mission and is part of the USML-2 payload. He also was a principal investigator for the Fluid Interface and Bubble Experiment examining the behavior of a rotating free surface aboard NASA's KC-135 aircraft. He is the author of 27 journal papers, 45 conference papers, and nine NASA reports involving atmospheric and fluid dynamic phenomena.

In 1987, he became chief of the Fluid Dynamics Branch where he directed and conducted research in both laboratory and theoretical investigations. He was also the mission scientist for the Japanese Spacelab mission, STS-47. STS-73 will be his first space flight.

A native of Boston, MA, Sacco, 46, received a bachelor's degree with honors from Northeastern University in 1973 and a doctorate from the Massachusetts Institute of Technology in 1977, both in chemical engineering. Since 1977, Sacco has been on the faculty at Worcester Polytechnic Institute in the Department of Chemical Engineering, splitting his time between research and teaching. He was appointed department head in 1989. He has consulted for numerous companies in the field of catalysis, solid/gas contacting, and equipment design for space applications. Also, with his father and brother, he ran a family restaurant in Boston for more than 20 years.

Sacco has over 70 publications in the areas of carbon filament initiation and growth, catalyst deactivation, and zeolite synthesis. He is the principal investigator for the Zeolite Crystal Growth Experiment and served as an alternate payload specialist on USML-1.

The alternate payload specialists for the USML-2 mission are Glynn Holt, a research scientist at NASA's Jet Propulsion Laboratory, and David Matthiesen, an assistant professor of Materials Science and Engineering at Case Western Reserve University.

Holt, 35, a native of Plainview, TX, has performed significant research in support of the Drop Physics Module Program. He has authored numerous papers on drop behavior and gas bubble phenomena in both 1-G and microgravity environments. He is a co-investigator for the Drop Physics Module for both USML-1 and USML-2.

Matthiesen, 37, a native of Blue Island, IL, has conducted extensive material processing research both in the laboratory and in low gravity aboard the KC-136. He was principal investigator on the USML-1 gallium arsenide experiment and will serve as PI for a similar activity on USML-2.

SHUTTLE FLIGHTS AS OF AUGUST 1995

71 TOTAL FLIGHTS OF THE SHUTTLE SYSTEM -- 46 SINCE RETURN TO FLIGHT

OV-099 Challenger (10 flights)	OV-102 Columbia (17 flights)	OV-103 Discovery (21 flights)	OV-104 Atlantis (14 flights)	OV-105 Endeavour (9 flights)
		STS-70 July 1995		
		STS-63 02/03/95 - 02/11/95		
		STS-64 09/09/94 - 09/20/94		
		STS-60 02/03/94 - 02/11/94		
	STS-65 07/08/94 - 07/23/94	STS-51 09/12/93 - 09/22/93		
	STS-62 03/04/94 - 03/18/94	STS-56 04/08/93 - 04/17/93		
	STS-58 10/18/93 - 11/01/93	STS-53 12/2/92 - 12/9/92		
	STS-55 04/26/93 - 05/06/93	STS-42 01/22/92 - 01/30/92	STS-71 06/27/95 - 07/07/95	
	STS-52 10/22/92 - 11/1/92	STS-48 09/12/91 - 09/18/91	STS-66 11/03/94 - 11/14/94	
	STS-50 06/25/92 - 07/09/92	STS-39 04/28/91 - 05/06/91	STS-46 7/31/92 - 8/8/92	
	STS-40 06/05/91 - 06/14/91	STS-41 10/06/90 - 10/10/90	STS-45 03/24/92 - 04/02/92	
STS 51-L 01/28/86	STS-35 12/02/90 - 12/10/90	STS-31 04/24/90 - 04/29/90	STS-44 11/24/91 - 12/01/91	
STS 61-A 10/30/85 - 11/06/85	STS-32 01/09/90 - 01/20/90	STS-33 11/22/89 - 11/27/89	STS-43 08/02/91 - 08/11/91	STS-69 August 1995
STS 51-F 07/29/85 - 08/06/85	STS-28 08/08/89 - 08/13/89	STS-29 03/13/89 - 03/18/89	STS-37 04/05/91 - 04/11/91	STS-67 03/02/95 - 03/18/95
STS 51-B 04/29/85 - 05/6/85	STS 61-C 01/12/86 - 01/18/86	STS-26 09/29/88 - 10/03/88	STS-38 11/15/90 - 11/20/90	STS-68 09/30/94 - 10/11/94
STS 41-G 10/5/84 - 10/13/84	STS-9 11/28/83 - 12/08/83	STS 51-I 08/27/85 - 09/03/85	STS-36 02/28/90 - 03/04/90	STS-59 04/09/94 - 04/20/94
STS 41-C 04/06/84 - 04/13/84	STS-5 11/11/82 - 11/16/82	51-G 06/17/85 - 06/24/85	STS-34 10/18/89 - 10/23/89	STS-61 12/2/93 - 12/13/93
STS 41-B 02/03/84 - 02/11/84	STS-4 06/27/82 - 07/04/82	51-D 04/12/85 - 04/19/85	STS-30 05/04/89 - 05/08/89	STS-57 6/21/93 - 7/1/93
STS-8 08/30/83 - 09/05/83	STS-3 03/22/82 - 03/30/82	STS 51-C 01/24/85 - 01/27/85	STS-27 12/02/88 - 12/06/88	STS-54 01/13/93 - 01/19/93
STS-7 06/18/83 - 06/24/83	STS-2 11/12/81 - 11/14/81	STS 51-A 11/08/84 - 11/16/84	STS 61-B 11/26/85 - 12/03/85	STS-47 09/12/92 - 09/20/92
STS-6 04/04/83 - 04/09/83	STS-1 04/12/81 - 04/14/81	STS 41-D 08/30/84 - 09/04/84	STS 51-J 10/03/85 - 10/07/85	STS-49 05/07/92 - 05/16/92

UPCOMING SHUTTLE MISSIONS

MISSION	ORBITER	MAJOR PAYLOADS	TARGET DATE	MISSION DURATION
STS-74	ATLANTIS	Shuttle-Mir Mission-2	NOVEMBER 1995	6+1 Days
STS-72	ENDEAVOUR	Space Flyer Unit-Retrieval OAST-FLYER	DECEMBER 1995	10 Days
STS-75	COLUMBIA	Tethered Satellite System United States Microgravity Payload-3	FEBRUARY 1996	13 Days
STS-76	ATLANTIS	Shuttle-Mir Mission-3	APRIL 1996	10+1 Days
STS-77	ENDEAVOUR	SPACEHAB-4 SPARTAN-207	MAY 1996	9 Days
STS-78	COLUMBIA	Life and Microgravity Sciences	JULY 1996	14+2 Days
STS-79	ATLANTIS	Shuttle-Mir Mission-4	AUGUST 1996	9+1 Days
STS-80	COLUMBIA	ORFEUS-SPAS SPTN-201-04	NOVEMBER 1996	16 Days
STS-81	ATLANTIS	Shuttle-Mir Mission-5	DECEMBER 1996	10 Days

Based on February 1995 Manifest

News Release

National Aeronautics and
Space Administration

Washington, DC 20546
(202) 358-1600

Brian Dunbar
Headquarters, Washington, DC
(Phone: 202/358-1547)

Allen Kenitzer
Goddard Space Flight Center, Greenbelt, MD
(Phone: 301/286-2806)

For Release
September 15, 1995

RELEASE: C95-m

EOS CONTRACT HIGHLIGHTS NASA'S NEW BUSINESS PRACTICES

After extensive discussions aimed at getting the best deal for U.S. taxpayers, NASA has awarded a $398.7 million contract to TRW Inc., Redondo Beach, CA, for the Earth Observing System (EOS) Common Spacecraft.

"I'm very pleased with this contract," said NASA Administrator Daniel S. Goldin. "It represents the new way of doing business at NASA: getting the absolute most for the dollar. We asked the bidders to be innovative in technical design and management and realistic in estimating costs. We've made NASA a better buyer and we're getting the most for the taxpayers."

In May, NASA informed all offerors that their prices were unrealistic for the proposed technical approach. After NASA and each individual firm discussed technical and cost-realism issues, each firm in the competitive range submitted a "best and final offer." Those offers were the basis for the selection.

The cost-plus-award-fee contract is for two spacecraft, EOS PM-1 and EOS CHEM-1, with separate options for two additional spacecraft. If both options are exercised, the contract's value will increase to $668.5 million. The contract became effective on Sept. 15, 1995, and with the exercise of both options would continue through 2012.

TRW will design, fabricate, integrate, test, deliver, and provide launch support and flight-operations support for the spacecraft. The spacecraft launches begin in 2000 (PM-1). NASA's Goddard Space Flight Center, Greenbelt, MD, will manage the contract.

-more-

The EOS Common Spacecraft will serve as the platform for obtaining some of the 24 measurements that comprise the heart of the EOS mission. The EOS PM-1 spacecraft will focus on climate-related measurements of the Earth's atmosphere, cloud cover, precipitation, terrestrial snow cover and sea ice. EOS CHEM-1 will measure a variety of chemicals in the Earth's atmosphere.

EOS is the centerpiece of NASA's Mission to Planet Earth (MTPE), a long-term coordinated program to study the Earth as a single, global environment. MTPE data are already being used to study the connections among the Earth's air, water, land and life. The first EOS spacecraft, EOS AM-1, is under construction and will be launched in 1998. EOS will greatly expand MTPE's scope, with benefits ranging from improved long-term weather forecasting to a greater understanding of the Earth's climate.

- end -

NASA press releases and other information are available automatically by sending an Internet electronic mail message to domo@hq.nasa.gov. In the body of the message (not the subject line) users should type the words "subscribe press-release" (no quotes). The system will reply with a confirmation via E-mail of each subscription. A second automatic message will include additional information on the service. Questions should be directed to (202) 358-4043.

Video Advisory

National Aeronautics and
Space Administration

Washington, DC 20546
(202) 358-1600

For Release

September 18, 1995

David E. Steitz
Headquarters, Washington, DC
(Phone: 202/358-1730)

VIDEO ADVISORY: V95-140

HELIUM BALLOON, NEW FORCEPS ON NTV TUESDAY

On Tuesday NASA Television will provide footage of a helium balloon being inflated and checked for leaks in the Vehicle Assembly Building (VAB) at the Kennedy Space Center, FL. The balloon's captain, Henk Brink of The Netherlands, hopes to complete the first non-stop flight around the world, and requested NASA's help in preparing for his history-making trip. NASA's VAB is the only building believed to be large enough to accommodate an indoor leak check on a balloon that is 200 feet tall when fully inflated. Following the piece on the balloon, NASA TV will replay footage and interviews on new space-age forceps that may make infant delivery safer.

NASA Television video news files are aired at noon, 3, 6, and 9 p.m. EDT.

ITEM #1: HELIUM BALLOON IN THE VAB **TRT: tbd**
Helium balloon inflated at Kennedy Space Center VAB.

ITEM #2: REPLAY: NEW SURGICAL FORCEPS **TRT: 1:06**
ITEM #3: REPLAY: INTERVIEW -- STAN SMELTZER **TRT: :55**
ITEM #4: REPLAY: INTERVIEW -- DR. JASON COLLINS **TRT: 1:55**

NASA Television is broadcast on Spacenet 2, transponder 5, channel 9, C-Band, located at 69 degrees West longitude, with horizontal polarization. Frequency will be on 3880.0 megahertz, with audio on 6.8 megahertz.

-end-

News Release

National Aeronautics and
Space Administration

Washington, DC 20546
(202) 358-1600

For Release

September 18, 1995

Jim Cast
Headquarters, Washington, DC
(Phone: 202/358-1779)

June Malone/Bob Lessels
Marshall Space Flight Center, Huntsville, AL
(Phone: 205/544-0034)

RELEASE: 95-153

SPACE-AGE FORCEPS COULD MAKE INFANT DELIVERY SAFER

NASA technology using composite materials and fiber optic sensing may soon be at work in hospital delivery rooms, making childbirth safer and easier.

NASA's Marshall Space Flight Center, Huntsville, AL, recently signed a Space Act Agreement with Dr. Jason H. Collins of the Collins Clinic in Slidell, LA, to redesign the obstetrical forceps used to properly position an infant in a mother's womb prior to delivery.

The research at Marshall will seek to identify a suitable composite material from which safer forceps can be made, and also help design instrumentation to measure the forces being applied to an infant during an instrument-assisted delivery.

"Metal forceps currently used do not allow the attending physician to assess the force the instrument is placing on the infant," according to Dr. Collins. "If excessive, the infant could be injured."

The instrumentation of the forceps will benefit medical students as well. Currently, obstetricians must acquire a "feel" for their instruments during actual infant deliveries to ascertain how much force is safe. The instrumented forceps will allow obstetrical students to learn to use forceps within safe limits before entering practice.

"We hope to complete work on the new forceps early next year," said Stan Smeltzer of Marshall's Structures and Dynamics Laboratory. Smeltzer is the design engineer on the Marshall team working with Dr. Collins. "Using composite materials will help ensure that a safer distribution of pressure will be applied to the infant through the forceps used by the physician," Smeltzer said.

-more-

"By using space program instrumentation technology, fiber optic sensors will be embedded in the composite material during the manufacturing process," said Seth Lawson of Marshall's Materials and Processes Laboratory. Lawson is the manufacturing engineer of the team working with Dr. Collins. "These sensors will enable the physician to monitor forces on the infant throughout the delivery."

NASA's involvement in the forceps program resulted from a request for technical assistance from Dr. Collins to Marshall's Technology Transfer Office. The two Marshall engineers will perform the design and analysis, produce design drawings, identify suitable composite materials, and conduct testing of samples of candidate materials for the composite forceps. The Collins Clinic will develop and clinically qualify the new obstetrical forceps.

Marshall's Technology Transfer Office is responsible for the direct transfer of NASA-inspired ideas and solutions to businesses throughout the Southeast. The office also interacts with companies and government organizations around the country, providing assistance for a variety of technology challenges.

- end -

NASA press releases and other information are available automatically by sending an Internet electronic mail message to domo@hq.nasa.gov. In the body of the message (not the subject line) users should type the words "subscribe press-release" (no quotes). The system will reply with a confirmation via E-mail of each subscription. A second automatic message will include additional information on the service. Questions should be directed to (202) 358-4043.

News Release

National Aeronautics and
Space Administration

Washington, DC 20546
(202) 358-1600

For Release

Sonja Maclin
Headquarters, Washington, DC
(Phone: 202/358-1600)

September 18, 1995

RELEASE: 95-154

NASA MINORITY CONTRACTORS OF THE YEAR NAMED

NASA Administrator Daniel S. Goldin has named two small firms as minority contractor and subcontractor of the year for their outstanding contributions to the nation's space program.

Mnemonic Systems, Inc. (MSI), Washington, DC, was named NASA Minority Contractor of the Year and MEVATEC Inc., Huntsville, AL, was named NASA Minority Subcontractor of the Year.

"These two firms are on the cutting edge of technology and are indicative of industry's diversity and talent which contributes so greatly to the success and future of NASA. They represent a cadre of bold and innovative high technology small businesses that NASA will continue to seek," Goldin said.

MSI, nominated by NASA Headquarters, was recognized for developing an Agencywide Distributed Environment (ADE), a system that integrates the computing resources of all NASA Centers. Artis G. Isaac is President and CEO of MSI and has led the firm in its growth over the past six years from 28 employees to a projected 250 employees by year's end.

MEVATEC Inc., nominated by Sverdrup Technology, Inc., under contract to the Marshall Space Flight Center, Huntsville, AL, was recognized for innovative science such as the development of the Optical Transient Detector, an infrared lightning detector. The OTD was calibrated by MEVATEC engineers in a facility specifically designed for this purpose. In May of this year, the OTD was launched in a low-Earth orbit and began sending down scientific information on the occurrences and phenomenon of lightning. Nancy Archuleta, President and CEO, has spearheaded MEVATEC's growth from a five-person family business in 1988 to a 275-person operation today.

-more-

NASA will host an awards ceremony at 2:30 p.m. EDT, Tuesday, September 26, in the NASA Headquarters Auditorium, 300 E Street, SW, Washington, DC. During the ceremony, Goldin will officially recognize the two firms as well as, Bernard Pagliaro and Janet Jew of the Goddard Space Flight Center, Greenbelt, MD, and Dr. Sunil Dutta of the Lewis Research Center, Cleveland, OH, for their significant contributions to NASA's small and minority business program.

The ceremony will be open to the public with a reception immediately following.

-end-

NASA press releases and other information are available automatically by sending an Internet electronic mail message to domo@hq.nasa.gov. In the body of the message (not the subject line) users should type the words "subscribe press-release" (no quotes). The system will reply with a confirmation via E-mail of each subscription. A second automatic message will include additional information on the service. Questions should be directed to (202) 358-4043.

Video Advisory

National Aeronautics and
Space Administration

Washington, DC 20546
(202) 358-1600

For Release

September 19, 1995

David E. Steitz
Headquarters, Washington, DC
(Phone: 202/358-1730)

VIDEO ADVISORY: V95-141

NOBEL PHYSICIST TING, PATHFINDER "FLYING WING" ON NTV

On Wednesday NASA Television will air an interview with Dr. Samuel C.C. Ting, Nobel laureate and professor of physics at the Massachusetts Institute of Technology, Cambridge, MA. Ting is the lead investigator for a major new experiment due to fly aboard the international Space Station that will look for antimatter originating from outside our galaxy. The experiment may lead to the scientific discovery of "dark matter," the mysterious yet undiscovered material which some scientists say makes up 90% or more of the universe. NASA and the Department of Energy (DOE) have signed an agreement approving the flight of this DOE-sponsored experiment. The experiment will fly on the Space Shuttle and later aboard the Space Station.

Following the interview with Dr. Ting, NASA TV will replay footage of a helium balloon that was leak checked at the Kennedy Space Center, FL, last weekend. NASA TV also willair footage and interviews reviewing a record breaking flight test of the solar powered "Pathfinder," a "flying wing" controlled remotely from a ground station.

NOTE: Due to Space Shuttle preflight briefings scheduled for Wednesday, the video news file scheduled for 3 p.m. that day will air at 4 p.m. EDT ; the 6 p.m. news file will air at 6:15 p.m. EDT.

ITEM #1: INTERVIEW -- DR. SAMUEL TING **TRT: 3:00**
Dr. Ting discusses the importance of an experiment that will fly aboard the Space Shuttle and the international Space Station that will investigate the nature of antimatter.

ITEM #2: REPLAY: HELIUM BALLOON IN THE VAB **TRT: 1:08**
Helium balloon inflated at Kennedy Space Center VAB.

ITEM #3: NEW RECORD SET BY PATHFINDER **TRT: 2:00**
The solar powered flying wing sets a new altitude record Sept. 11, reaching 50,500 feet.

ITEM #4: INTERVIEW -- JENNIFER BAER-RIEDHART **TRT: 2:00**
Baer-Riedhart explains the success of the Pathfinder.

ITEM #5: INTEERVIEW - RAY MORGAN **TRT: 1:50**
Morgan discusses Pathfinder's capability as a light wing-loading aircraft.

NASA Television is broadcast on Spacenet 2, transponder 5, channel 9, C-Band, located at 69 degrees West longitude, with horizontal polarization. Frequency will be on 3880.0 megahertz, with audio on 6.8 megahertz.

-end-

News Release

National Aeronautics and
Space Administration

Washington, DC 20546
(202) 358-1600

Douglas Isbell
Headquarters, Washington, DC
(Phone: 202/358-1753)

Diane Ainsworth
Jet Propulsion Laboratory, Pasadena, CA
(Phone: 818/354-5011)

For Release
September 19, 1995

RELEASE: 95-155

NASA CHARTS COURSE FOR FIRST NEW MILLENNIUM FLIGHT

NASA officials have confirmed the basic mission profile and technology plan for the first launch in the agency's New Millennium program, and selected the mission's primary industrial partner and its team leader.

The first of three deep space missions to be flown by the year 2000 under the New Millennium technology validation effort will feature a 1998 launch of a small spacecraft destined for a flyby of an asteroid and a comet.

Spectrum Astro, Inc., of Gilbert, AZ, has been selected as the primary industrial partner on the first mission team, which will be led by David Lehman of NASA's Jet Propulsion Laboratory (JPL), Pasadena, CA. Lehman most recently served as technical manager of the attitude and information management subsystem on the Mars Pathfinder, a NASA Discovery program mission due for launch in December 1996.

Final decisions on the details of the first New Millennium mission -- such as its exact launch date and the target asteroid and comet to be visited -- will be made following several weeks of intense systems design work by the mission team, due to begin in early October.

The proposed 220-pound spacecraft will demonstrate a variety of advanced technologies that help enable many ambitious deep space and Earth-orbiting missions envisioned by NASA for flight early in the next century. The spacecraft also will be the first to rely on solar electric propulsion for its main source of thrust, rather than conventional solid or liquid propellant-based systems.

Technologies likely to be demonstrated on this first flight include a miniaturized deep space antenna and related telecommunications equipment, advanced solar arrays and lithium ion spacecraft batteries, and low-mass spacecraft structures. The spacecraft's science instrument payload will include a miniaturized imaging spectrometer that will make chemical maps of the target asteroid and comet. New mission operations techniques will give the spacecraft independent decision-making abilities that are unprecedented for such a deep space mission.

-more-

"These technologies represent significant leaps over the existing state of the art for deep space vehicles," said Kane Casani, New Millennium program manager at the JPL. "We'll have a very capable yet very advanced flight computer as well as a prototype multispectral science instrument that is at most 1/10th of the mass of similar instruments on the Voyager probes. The autonomous navigation capabilities will deliver performance equivalent to sailing a ship across the Atlantic Ocean hands-free while arriving at the port in Europe a few steps away from the dock."

The propulsion-related technology for the mission is currently under development by two separate programs run by NASA and the U.S. Air Force Ballistic Missile Defense Organization. The first New Millennium spacecraft will serve as the host for this hardware.

Thrust during the mission will be generated by one 11.8-inch diameter "ion-drive" thruster, which expels a high-velocity beam of Xenon gas from the spacecraft that has been ionized using the electricity produced by the solar arrays. Ion-drive systems are much more efficient than chemical propulsion systems, which typically require two or more chemical propellants for fuel and oxidizer. Smaller versions of such thrusters have been used occasionally on Earth-orbiting satellites for adjusting spacecraft attitude or executing small orbit changes, but no space vehicle has yet employed solar electric propulsion as its primary means of thrust.

"This idea has been around for decades, and the dramatic benefits of ion propulsion for a wide variety of deep space missions are well known, but NASA science mission managers have never felt that the technology was mature enough to be used for the first time on their mission," Casani said. "With important contributions from other technology development programs, New Millennium will take on this challenge and bring full-scale solar electric propulsion out of the lab and into space once and for all."

Depending on the launch date, the primary asteroid and comet flyby mission will last 12 to 18 months. "Spacecraft health permitting, an extended mission of one to two years should be possible, allowing the spacecraft to pass by one or more additional small bodies in the solar system," said Rex Ridenoure, New Millennium program architect at JPL.

The New Millennium program is managed by JPL for NASA's Offices of Space Science, Office of Space Access and Technology and Office of Mission to Planet Earth, Washington, DC.

-end-

NASA press releases and other information are available automatically by sending an Internet electronic mail message to domo@hq.nasa.gov. In the body of the message (not the subject line) users should type the words "subscribe press-release" (no quotes). The system will reply with a confirmation via E-mail of each subscription. A second automatic message will include additional information on the service. Questions should be directed to (202) 358-4043.

Video Advisory

National Aeronautics and
Space Administration

Washington, DC 20546
(202) 358-1600

For Release

September 20, 1995

David E. Steitz
Headquarters, Washington, DC
(Phone: 202/358-1730)

VIDEO ADVISORY: V95-142

NOBEL PHYSICIST DR. SAMUEL C.C. TING ON NTV

On Thursday NASA Television will reair an interview with Dr. Samuel C.C. Ting, Nobel laureate and professor of physics at the Massachusetts Institute of Technology, Cambridge, MA. Ting is the lead investigator for a major new experiment due to fly aboard the international Space Station that will look for antimatter originating from outside our galaxy. The experiment may also lead to the scientific discovery of "dark matter," the mysterious yet undiscovered material which some scientists say makes up 90% or more of the universe. NASA and the Department of Energy (DOE) have signed an agreement approving the flight of this DOE-sponsored experiment. The experiment will fly on the Space Shuttle and later aboard the Space Station.

Video News Files are aired each day at noon, 3, 6, and 9 p.m. EDT.

ITEM #1: INTERVIEW -- DR. SAMUEL TING **TRT: 3:50**

Dr. Ting discusses the importance of an experiment that will fly aboard the Space Shuttle and the international Space Station that will investigate the nature of antimatter.

NASA Television is broadcast on Spacenet 2, transponder 5, channel 9, C-Band, located at 69 degrees West longitude, with horizontal polarization. Frequency will be on 3880.0 megahertz, with audio on 6.8 megahertz.

-end-

News Release

National Aeronautics and
Space Administration

Washington, DC 20546
(202) 358-1600

For Release

September 20, 1995

Ed Campion
Headquarters, Washington, DC
(Phone: 202/358-1778)

Kyle Herring
Johnson Space Center, Houston
(Phone: 713/483-5111)

RELEASE: 95-156

ASTRONAUTS PRECOURT, LAWRENCE HEAD TO RUSSIA

Astronaut Charles J. Precourt (Lt. Col., USAF), will replace Michael A. Baker (Captain, USN), as the NASA manager of operational activities at Star City, Russia, near Moscow. In addition, Wendy B. Lawrence (Commander, USN), will train in Star City as the backup to John E. Blaha, (Colonel, USAF, ret.) who will fly aboard the Russian space station Mir on a future mission.

As Director of Operations, Russia, Precourt will support training and preparations of NASA astronauts at the Gagarin Cosmonaut Training Center (GCTC), Star City. He also will be the primary link between NASA and the GCTC management, coordinating all training and other operations involving NASA or contractor personnel in Star City.

Precourt, the fifth astronaut to serve in this rotational assignment will continue to establish operational and personal relationships with Star City management and the cosmonauts. These relationships are pivotal to successful, long-term joint operations involving NASA, the Russian Space Agency and GCTC. He also will participate in personal training designed to acquaint astronauts with the operational aspects of Russian vehicles and training facilities.

Precourt and Lawrence will leave for Russia in early October and join fellow astronauts Shannon W. Lucid, Ph.D., Jerry M. Linenger (Commander, USN) and Dr. Scott E. Parazynski, who also are training in Star City for future stays aboard Mir.

Precourt, 40, has flown aboard two Shuttle missions -- STS-55 on Columbia in April/May 1993 and STS-71 on Atlantis in June 1995. The most recent flight was the first Shuttle mission to dock with Mir. He received a master of science degree in engineering management from Golden Gate University in 1988 and a master of arts degree in national security affairs and strategic studies from the U.S. Naval War College in 1990.

-more-

Lawrence, 36, flew on STS-67 aboard Endeavour in March 1995. She received a master of science degree in ocean engineering from Massachusetts Institute of Technology and the Woods Hole Oceanographic Institute in 1988.

- end -

NASA press releases and other information are available automatically by sending an Internet electronic mail message to domo@hq.nasa.gov. In the body of the message (not the subject line) users should type the words "subscribe press-release" (no quotes). The system will reply with a confirmation via E-mail of each subscription. A second automatic message will include additional information on the service. Questions should be directed to (202) 358-4043.

News Release

National Aeronautics and
Space Administration

Washington, DC 20546
(202) 358-1600

For Release

Michael Braukus
Headquarters, Washington, DC
(Phone: 202/358-1979)

September 20, 1995

Don Savage
Headquarters, Washington, DC
(Phone: 202/358-1727)

Jeff Sherwood
Department of Energy, Washington, DC
(Phone: 202/586-5806)

RELEASE: 95-157

PHYSICS EXPERIMENT TO FLY ON SPACE STATION

NASA and the Department of Energy (DOE) today signed an agreement to fly a major scientific experiment on the Space Shuttle and later on the international Space Station. Nobel laureate, Professor Samuel C.C. Ting of the Massachusetts Institute of Technology will lead the experiment's scientific team.

The DOE-sponsored experiment will look for antimatter originating from outside our galaxy and also may lead to the scientific discovery of dark matter, the mysterious, yet undiscovered material that some scientists say makes up 90% or more of the universe.

"The enthusiastic cooperation from NASA has helped to make this physics research in space possible," said Secretary of Energy Hazel R. O'Leary. "This pioneering experiment holds the promise of delivering a better understanding of our universe."

"I'm thrilled that this experiment has been selected to fly on the Space Station," said NASA Administrator Daniel S. Goldin. "I've always said that the Space Station will be an orbiting laboratory capable of conducting world-class science, and the addition of an experiment whose science team is led by a Nobel laureate is one more step in realizing the full potential of the Space Station."

- more -

The experiment is a state-of-the-art particle physics detector called the Alpha Magnetic Spectrometer (AMS). AMS will use the unique environment of space to study the properties and origin of cosmic particles and nuclei including antimatter and dark matter. Discovering the presence of either material will increase scientists' understanding of the early universe and could potentially lead to a clearer understanding of the actual origin of the universe and to the discovery of antimatter stars and galaxies.

The AMS experiment is an international collaboration of some 37 universities and laboratories. AMS will be the first large magnet experiment ever placed in Earth orbit. NASA plans to fly AMS initially as a Space Shuttle payload on the STS-90 mission in April 1998. This flight will provide the investigator's team with data on background sources and verify the detector's performance under actual space flight conditions. The detector will operate for approximately 100 hours during this mission.

The detector's second space flight will occur when it is launched on Space Shuttle mission STS-110 in 2001 for installation on the Space Station as an attached payload. Current plans call for operating the detector for three years before it is returned to Earth on the Shuttle.

Utilizing the Space Station offers the science team the opportunity to conduct the long-duration research necessary to collect sufficient data required to accomplish the science objectives.

NASA Associate Administrator Harry Holloway and DOE's Director of Energy Research Martha Krebs signed today's interagency agreement in a ceremony in Washington, DC.

- end -

NASA press releases and other information are available automatically by sending an Internet electronic mail message to domo@hq.nasa.gov. In the body of the message (not the subject line) users should type the words "subscribe press-release" (no quotes). The system will reply with a confirmation via E-mail of each subscription. A second automatic message will include additional information on the service. Questions should be directed to (202) 358-4043.

Video Advisory

National Aeronautics and
Space Administration

Washington, DC 20546
(202) 358-1600

David E. Steitz
Headquarters, Washington, DC
(Phone: 202/358-1730)

For Release

September 21, 1995

VIDEO ADVISORY: V95-143

ATTENTION: NEWS WEATHER DESK

WORLD'S OCEAN CURRENTS AND EL NINO EXAMINED ON NTV FRIDAY

Friday's NASA Television video news file will feature animation and interviews discussing how ocean currents are influenced by El Nino, a climatic event that affects weather patterns worldwide. Each year El Nino influences the ocean currents of the Pacific, in turn affecting weather patterns around the globe. NASA's Office of Mission to Planet Earth is studying El Nino to learn more about how Earth's weather patterns are formed, and the weather's interaction with the planet as a whole. Following the features on El Nino, NASA TV will air a piece on new environmentally friendly Space Shuttle solid rocket booster insulation. Developed at NASA's Marshall Space Flight Center, Huntsville, AL, the new sprayable insulation for the boosters is environmentally safe.

Video News Files are aired each day at noon, 3, 6, and 9 p.m. EDT.

ITEM #1: CURRENTS OF THE WORLD'S OCEANS **TRT: 1:11**
Animation of ocean currents around the world.

ITEM #2: THE EVOLUTION OF EL NINO **TRT: :28**
Animation showing the onset of El Nino, marked by the arrival of warm Pacific Ocean water (shown in red) near the coast of South America in late fall-early winter.

ITEM #3: INTERVIEW -- DR. ANTONIO BUSILACHI **TRT: tbd**
Dr. Busilachi discusses El Nino and ocean currents.

ITEM #4: ENVIRONMENTALLY FRIENDLY BOOSTER INSULATION **TRT: tbd**
New environmentally friendly solid rocket booster insulation.

ITEM #5: INTERVIEW -- HANK MILLER **TRT: tbd**
Miller, manager of thermal protection for the solid rocket boosters at the Marshall Space Flight Center explains how the sprayable booster insulation is environmentally safe.

NASA Television is broadcast on Spacenet 2, transponder 5, channel 9, C-Band, located at 69 degrees West longitude, with horizontal polarization. Frequency will be on 3880.0 megahertz, with audio on 6.8 megahertz.

-end-

News Release

National Aeronautics and
Space Administration

Washington, DC 20546
(202) 358-1600

For Release

Ed Campion
Headquarters, Washington, DC
(Phone: 202/358-1778)

September 22, 1995

Lisa Malone
Kennedy Space Center, FL
(Phone: 407/867-2468)

NOTE TO EDITORS: N95-61

STS-73 COUNTDOWN BRIEFINGS/LAUNCH COVERAGE - SEPT. 25-28

A series of briefings will be held next week at NASA's Kennedy Space Center, FL, in connection with the upcoming launch of the Space Shuttle Columbia on mission STS-73. Launch is scheduled for Thursday, Sept. 28, at 9:35 a.m. EDT.

Beginning Monday, Sept. 25, daily countdown status briefings will be held to update news media on final processing activities for the launch. A pre-launch news conference with NASA senior managers will be held at 10 a.m. EDT Sept. 27, to discuss STS-73 mission readiness and objectives. Also, NASA TV will replay the pre-flight briefings that were held at the Johnson Space Center, Houston, and the Marshall Space Flight Center, Huntsville, AL, earlier this week.

Attached is a listing of the times, subjects and participants for each of the scheduled briefings. Also noted on the schedule are key STS-73 pre-launch activities and NASA TV replays.

- end -

NASA press releases and other information are available automatically by sending an Internet electronic mail message to domo@hq.nasa.gov. In the body of the message (not the subject line) users should type the words "subscribe press-release" (no quotes). The system will reply with a confirmation via E-mail of each subscription. A second automatic message will include additional information on the service. Questions should be directed to (202) 358-4043.

STS-73 PAO BRIEFINGS & EVENTS

(Based on September 28, 1995 launch date)

****

Launch - 3 Days - Monday, September 25, 1995

4 a.m. **Begin STS-73 launch countdown**

8 a.m. **STS-73 Crew Arrival at KSC Shuttle Landing Facility**

9 a.m. **Countdown Status**
Moderator: KSC PIO
Briefers: John Guidi, NASA Test Director
Glenn Snyder, KSC STS-73 Payload Manager
John Weems, Shuttle Weather Officer

****

LAUNCH - 2 DAYS - Tuesday, September 26, 1995

9 a.m. **Countdown Status**
Moderator: KSC PIO
Briefers: John Stealey, NASA Test Director
Glenn Snyder, KSC STS-73 Payload Manager
John Weems, Shuttle Weather Officer

****

LAUNCH - 1 DAY - Wednesday, September 27, 1995

10 a.m. **Pre-Launch Press Conference**
Moderator: Lisa Malone
Briefers: Tommy Holloway, Space Shuttle Program Manager, JSC
Robert Rhome, Dir., Microgravity Science & Applications
Ed Gabris, Dir., Space Processing Div., Office of Space Access & Technology
Bob Sieck, Director, Shuttle Management & Operations, KSC
Capt. David Biggar, KSC Staff Weather Liason

1 p.m. ***Replay of STS-73 Pre-Flight Briefings***

****

LAUNCH DAY - Thursday, September 28, 1995

5 a.m. **Begin NASA Select coverage/commentary for STS-73 mission**

9:35 a.m. **STS-73 Launch**

10:30 a.m. **Post Launch News Conference**
Moderator: Lisa Malone
Briefers: Loren Shriver, Manager Launch Integration, KSC
Jim Harrington, KSC Launch Director

****

All times listed are EDT

News Release

National Aeronautics and
Space Administration

Washington, DC 20546
(202) 358-1600

For Release

September 22, 1995

Ed Campion
Headquarters, Washington, DC
(Phone: 202/358-1778)

Mark Hess
Headquarters, Washington, DC
(Phone: 202/358-0002)

RELEASE: 95-158

NASA RECEIVES OVER 40 RESPONSES OF INTEREST FROM INDUSTRY FOR SHUTTLE PROGRAM RESTRUCTURING EFFORT

Over 40 different companies have expressed an interest in serving as either the new prime contractor or a subcontractor in the agency's effort to restructure management of the Space Shuttle program.

The restructure of the Shuttle program includes reducing program requirements, significantly reducing civil service involvement in day-to-day operations, modifying the government approach to safety and mission assurance and consolidating contracts, including Shuttle and Station operations, into a single prime contract.

NASA will still have overall management responsibility for the Space Shuttle system and will still be responsible for such things as safety, program schedule and space flight operations budget. NASA will have appropriate insight into operations so they are aware of any potential system issues and will actively participate in resolution of any "out of family" or anomalous performance of Shuttle or payload hardware.

Of the packages received, there were four letters of interest and capability for consideration as the prime contractor for space flight operations. The companies submitting the packages were:

- Bamsi, Titusville, FL
- Boeing, Seattle, WA
- McDonnell Douglas Aerospace, St. Louis, MO
- United Space Alliance (a joint venture formed by Rockwell and Lockheed Martin, Houston, TX)

- more -

The NASA source evaluation board will now evaluate the statements of interest from industry. NASA plans to have this evaluation completed in the next several weeks, and is working toward the release of a draft Request for Proposals by mid-November 1995. This draft will be for the purpose of communicating with industry the approaches NASA would intend to use in the subsequent request for proposals and seeking industry comment on those approaches.

NASA will consider industry comments and recommendations for improvements which could be incorporated into the formal RFP. Following the review of comments, NASA will seek to release the formal RFP in early 1996. NASA hopes to select a prime contractor in the next 12 to 15 months.

Numerous firms expressed interest in subcontracting opportunities. A complete list of the firms considering subcontracting roles is available in the newsrooms at NASA Headquarters, Washington, DC; Kennedy Space Center, FL; Marshall Space Flight Center, Huntsville, AL; Stennis Space Center, Bay St. Louis, MS; Johnson Space Center, Houston and Dryden Flight Research Center, Edwards, CA.

- end -

NASA press releases and other information are available automatically by sending an Internet electronic mail message to domo@hq.nasa.gov. In the body of the message (not the subject line) users should type the words "subscribe press-release" (no quotes). The system will reply with a confirmation via E-mail of each subscription. A second automatic message will include additional information on the service. Questions should be directed to (202) 358-4043.

OFFERORS RESPONDING TO CBD SYNOPSIS

Date Rec'd	Name, Address POC	Phone No. FAX No. Internet Address	Size	S/P	Subcontractor Speciality	SIC Codes
8/31	ETA Technologies Corporation 5220 Pacific Concourse Drive Los Angeles, CA 90045 Jim Gates, Mgr, Business Dev.	(310) 536-0828 (301) 536-0862 GatesJH@aol.com	D	S	Shuttle & Space Station	
8/31	Genesis Engineering Corp. (GEC) P.O. Box 308 Glenn Dale, MD 20769 Robert Rashford, Pres. & CEO	(301) 286-7183	D	S	HST	
9/5	NAS, INC. Native American Service Assoc., Inc. 3411 Triana Blvd. Huntsville, Al 35805 Kenneth E. Gawronski, Ph.D. Mgr., Business Development	(205) 539-7928 (205) 539-5935 NASINC@AOL.COM	D	S	National Launch System (NLS)	
9/5	Texas Rocket Company P.O. Box 33591 San Antonio, TX 78264 Mark Goll	(210) 651-6558	B	S		
9/6	Science Systems & Application, Inc. (SSAI) 5900 Princess Garden Parkway Suite 300 Lanham, MD 20706 Om P. Bahethi, Ph.D.	(301) 731-9300 (301) 731-1180 om@ssai.gsfc.nasa.gov	D	S	S&E Support, Program Mgt, Info. Processing Systems Integration, Ops Support Services	
9/7	Future Technologies, Inc. 108 Third Street, Suite 222 Des Moines, Iowa 50309 Robert V. Morris	(515) 244-3645 (515) 244-3914	D	S	Environmental Characterization & Remediation Tech, Adv. Materials Synthesis, Chacterization & Processing, Chemical & Analytical Sciences, Computation & Theoretical Sciences	

L=Large Business **P=Prime**
B=Small Business **S=Subcontractor**
D=Small Disadvantaged Business

subofrs 9/20/95

OFFERORS RESPONDING TO CBD SYNOPSIS

Date Rec'd	Name, Address POC	Phone No. FAX No. Internet Address	Size	S/P	Subcontractor Speciality	SIC Codes
9/7	United Technologies USBI Co. P.O. Box 1900 Huntsville, AL 35807 J. Josef	(205) 721-2730 (205) 721-2588	?	S		
9/8	Madison Research Corporation 399 Executive Drive Huntsville, AL 35816 Bonny H. Pfitzer (Prog. Mgr.)	(205) 830-2286 (205) 830-4092 MRC@NUANCE.COM	D	S	Communications Systems, S/W Development/Testing, Computer Facility Support, Systems Dev, Engineering, Testing, & Integration	
9/8/95	Infinity Technology 1500 Perimeter Parkway Suite 330 Huntsville, AL 35806 Wesley H. Brown, Sr. (Dir., Bus. Dev. POC)	(205) 430-0563 (205) 430-3405	D	S	Sale of systems h/w, pkg'd s/w applcations & custon s/w development	3761,3412 4813,7363 7371,7373 7375,7379 8711,8731 8742
9/8/95	Jefferson Associates, Inc. 1002 Gemini, Suite 140 Houston, TX 77058 Limas Jefferson, Pres & CEO	(713) 286-4000 ext 205 (713) 286-1048 JEFFERSO@HTI.COM	D	S	Variety of highly technical system mgt & administration tasks	
9/11/95	Control Dynamics bd Systems, Inc. 600 Boulevard South, Suite 304 Huntsville, AL 35802 Michael A. Pope, Director, Division Business Development	(205) 882-2650 (205) 882-2683	D	S	Systems Engineering, analysis, simulation; integrated logistics support, configuration/data mgt; test/evaluation;computer resources & s/w; reliability & maintainability; program parts; materials/processes controls; manufacturing/producibility; quality assurance; program control/schedule analysis	

L=Large Business **P=Prime**
B=Small Business **S=Subcontractor**
D=Small Disadvantaged Business

OFFERORS RESPONDING TO CBD SYNOPSIS

Date Rec'd	Name, Address POC	Phone No. FAX No. Internet Address	Size	S/P	Subcontractor Speciality	SIC Codes
9/11/95	Blackhawk Management Corp. 16821 Buccaneer Lane Suite 107 Houston, TX 77058 Joseph D. Di Iorio, Chief Operating Officer	(713) 286-5751 (713) 286-5752 b_hawk@ix.netcom.com	D	S	Assist prime contractors in development & operation of integrated cost & schedule management systems.	
9/9/95	Dynacs Engineering Co. Inc. 28870 U.S. Highway 19 N. Suite 405 Clearwater, FL 34621-2596 Lindsay Ball, VP	(813) 725-3899 (813) 726-4755 Dynacs@gate.net or Jayant@onramp.net	D	S	Analysis simulation & modeling, engineering services & in value added reselling of computer systems.	
9/8/95	Sherikon Space System, Inc. P.O. Box 21266 Kennedy Space Center, FL 32815-0266 Rauol S. Barker, Pres & Gen Mgr	(407) 383-2970 (407) 735-4446 rauol.barker-1@ksc.nasa.gov	D	S	info systems, communications networking, public health, engineering, science & technology, & precision manufacturing	
9/11/95	New Technology, Inc. 700 Boulevard South, Suite 401 Huntsville, AL 35802-2176 James R. Beveridge, V.P.	(205) 883-2813 (205) 883-2884 newtech@Traveller.COM	B	S	Processing user data requirements, developing systems, flight & test operations, integration & operations	
9/11/95	The Bionetics Corporation Tenth Floor, Suite 1000 Harbour Centre Building 2 Eaton Street Hampton, VA 23669 Charles J. Stern, President	(804) 722-0330 (804) 723-4595 73234,1343@compuserve.com	L	S	Life Sciences research, environmental research, ecological assessments, instrument calibration & repair, flight experiment design & development, scientific flight instrument design & development, photographic services & interpretation, aerospace research & engineering, base maintenance/ aviation/administration services	

L=Large Business P=Prime
B=Small Business S=Subcontractor
D=Small Disadvantaged Business

subofrs 9/20/95

OFFERORS RESPONDING TO CBD SYNOPSIS

Date Rec'd	Name, Address POC	Phone No. FAX No. Internet Address	Size	S/P	Subcontractor Speciality	SIC Codes
9/11/95	Futron Corporation 7315 Wisconsin Ave Suite 900W Bethesda, MD 20814-3202 Joseph Fuller, President	(301) 907-7100 (301) 907-7125 jfuller@futron.com	B	S	Engineering & Technology management. Risk assessment, systems engineering, program management & integration, technology transfer, system safety, & systems integration.	
9/11/95	Bamsi, Inc. P.O. Box 1659 1650 Chaffee Drive Titusville, FL 32780 Hugh M. Brown, Pres/CEO	(407) 269-4193 (407) 268-8454	L	S P	Support services. Engineering support. Personnel resources, management resources, facilities & equipment resources, financial resources	
9/11/95	National Systems & Research Co. 5475 Mark Dabling Blvd. Suite 200 Colorado Springs, CO 80918 Rick Reamer, Bus. Dev. Mgr.	(719) 590-8880 (719) 590-8983 fratnsrcos@aol.com (direct to R. Reamer)	D	S	Engineering Services	
9/11/95	Quality Research 150 West Park Loop, Suite 302 Huntsville, AL 35806 John Nichols, PhD SSFF Proj Mgr.	(205) 722-0190 (205) 830-0484 John_Nichols@qr.com	D	S	Management planning, h/w s/w test, s/w life cycle engineering, s/w process assessments, s/w capability model development, s/w risk management, s/w metrics analysis	8731,7371 7379,7376 8711,8742 7373
9/11/95	Barrios Technology 1331 Gemini, Suite 300 Houston, TX 77058-2799 Sandra G. Johnson, Pres	(713) 480-1889 (713) 280-1901 sgj@popeye.jsc.nasa.gov	D	S	Engineering & technical services	

L=Large Business P=Prime
B=Small Business S=Subcontractor
D=Small Disadvantaged Business

subofrs 9/20/95

OFFERORS RESPONDING TO CBD SYNOPSIS

Date Rec'd	Name, Address POC	Phone No. FAX No. Internet Address	Size	S/P	Subcontractor Speciality	SIC Codes
9/11/95	OAO Corporation 7500 Greenway Center Drive Greenbelt, MD 20770 Henry J. Clarks III, VP Space Systems Div OR Issac T. Gillam, Sr VP Aerospace Systems Group	(301) 220-7124 (Clarks) (818) 354-8049 (Gillam) HCLARKS@OAO.COM	L	S	Engineers/Technical, computer ops/s/w,computer scientists,mission ops/technical,facility admin.	
9/11/95	NOL COMPUTER SERVICES 4601 Market Street Philadelphia, PA 19139 Noel Lowe, Principal	(215) 748-2199 (215) 748-2193 fni@netcom.com	D	S	Network and programming services	
9/11/95	CRSS Constructors, Inc. 4848 Loop Central Drive, Suite 270 Houston, TX 77081 James McDaniell, Proj Director	(713) 669-7213 (713) 660-7245 Jmdani@Hou01.Jacobs	L	S	Full-service program/construction management	
9/11/95	AJT & Associates Inc. 101 George King Boulevard Cape Canaveral, FL 32920 Alfredo J. Tejran, President	(407) 783-7989 (407) 783-7597	D	S	Multi-discipline Architect-Engineer, O&M of facilities, Environmental Science Services	
9/11/95	I-NET 100 Rialto Place, Suite 745 Melbourne, FL 32901 J. Michael Steinacher, VP NASA Programs	(407) 725-4747 (407) 725-6315	B	S	Computer/network svcs,outsourcing of computing & networking, advanced technology & engineering svcs	
9/11/95	Johnson Controls World Services, Inc. 7315 North Atlantic Avenue Cape Canaveral, FL 32920-2792 Harold E. Lockwood, VP & Gen Mgr, Space & Technology Services Sector	(407) 784-7246	L	S	Facility management services	

L=Large Business **P=Prime**
B=Small Business **S=Subcontractor**
D=Small Disadvantaged Business

subofrs 9/20/95

OFFERORS RESPONDING TO CBD SYNOPSIS

Date Rec'd	Name, Address POC	Phone No. FAX No. Internet Address	Size	S/P	Subcontractor Speciality	SIC Codes
9/12/95	Ash Technologies, Inc. 15 Constitution Drive, Suite 115 Bedford, NH 03110-6041 Ms. Terry L. Davis, Pres & CEO	(603) 471-0800 (603) 471-2511	D	S	Research & development of Electronic & Fiber Optic Systems, S/W engineering applications	
9/11/95	GeoControl Systems, Inc. 1720 NASA Road One, Suite 100 Houston, TX 77058 Rose V. Zarcaro, Pres & CEO	(713) 333-2561 (713) 333-2966	D	S	Computational System design & development activities and/or risk management support services.	
9/11/95	Hamilton Standard Space Systems International, Inc. One Hamilton Road Windsor Locks, CT 06096-1010 Dr. Deborah Barnhart, VP Bus Dev OR Mr. Merlin Shuey, Bus Dev Mgr.	(203) 654-6000 (860)654-4282 (Barnhart) (860) 654-5491	L	S	Design/development services analysis support, h/w	
9/14/95	SpaceTec Ventures, Inc. 3221 North Armistead Avenue Hampton, VA 23666 Marty Kaszubowski Dir. of Marketing	(804) 865-0900 (804) 865-8960 spacetc@infi.net	D	S	Engineering,management, scientific, & logistical services	3761,7371 7373,7374 7375,7376 7379,8711 8731,8732 8734,8741 8742,8743
9/14/95	Sverdrup Corporation/Sverdrup Technology, Inc. 600 William Northern Blvd. Tullahoma, TN 37388 Richard W. Butler, Pres. of Sverdrup Technology, Inc.	(615) 455-6400 (615) 393-6389 Svtmktg@edge.net	L	S	Providing engineering services to NASA & the Dept. of Defense in suport of aerodynamic & space systems research, development, test & evaluation. Also, provider of design/build services for aeronautical & space test facilities.	

L=Large Business **P=Prime**
B=Small Business **S=Subcontractor**
D=Small Disadvantaged Business

subofrs 9/20/95

OFFERORS RESPONDING TO CBD SYNOPSIS

Date Rec'd	Name, Address POC	Phone No. FAX No. Internet Address	Size	S/P	Subcontractor Speciality	SIC Codes
9/14/95	SPACEHAB 1215 Jefferson Davis Hwy. Suite 1501 Arlington, VA 22202-4302 Richard P. Hora, Pres. & CEO	(703) 414-8100 (corp office) (703) 414-8107	?	S	Shuttle Payload integration services. Development & qualification of science hardware.	
9/18/95	DynCorp 2000 Edmund Halley Drive Reston, VA 22091 Kris Butera, VP Science & Technology	(703) 264-8794 (703) 715-4450 buterak@USVA1.dyncorp.com	L	S	Engineering, scientific, technology, management, & technical support.	
9/18/95	EG&G Florida, Inc. 412 High Point Drive Cokcoa, FL 32952 J. R. Dubay, Corp. VP	(407) 867-7886 (407) 867-1199 @KMAIL.KSC.NASA GOV.	L	S	Research & development, engineering, manufacturing/tech. products, technology transfer, ops & maintenance support & tech services	
9/18/95	Comprehensive Technologies International (CTI) 1330 Braddock Place, Suite 300 Alexandria, VA 22314 A. J. Medica	(703) 518-2628 (703) 518-2666	D	S	Aerospace Engineering, Test & Evaluation, networking & communications, Program Management/Performance Measurement, Information Systems, Technology	
9/18/95	Document Systems Incorporated 1347 South Capitol Street, SW Washington, DC 20003-3526 Joel Limerick, President	(202) 466-8383 (202) 554-8116	D	S	Document conversion, document centers, mail rooms, record keeping tasks	
9/18/95	Captree Chemical Corp 32 B. Nancy Street W. Babylon, NY 11704 Ernest P. Gonzalez, President	(516) 491-7400 (516) 491-7130	D	S	Distributor for major chemical producers	

L=Large Business **P=Prime**
B=Small Business **S=Subcontractor**
D=Small Disadvantaged Business

subofrs 9/20/95

News Release

National Aeronautics and
Space Administration

Washington, DC 20546
(202) 358-1600

For Release

Brian Dunbar
Headquarters, Washington, DC
(Phone: 202/358-1547)

September 22, 1995

Ernie Shannon
Goddard Space Flight Center, Greenbelt, MD
(Phone: 301/286-6256)

RELEASE: 95-159

SCIENTISTS SAY EL NINO CAN NOW BE PREDICTED A YEAR IN ADVANCE

Recent advances in computer models and how they use ocean data now allow predictions of El Nino -- a dramatic climate shift that can affect weather and economies worldwide -- to be made more than a year before the event, new NASA, NOAA and university research indicates.

"Certain aspects of El Nino, such as equatorial Pacific sea-surface temperatures and related changes in precipitation patterns can now be predicted with confidence more than one year in advance," said Dr. Antonio Busalacchi of NASA's Goddard Space Flight Center, Greenbelt, MD.

The new study used data from the ten-year Tropical Ocean Global Atmosphere (TOGA) project, an international research program that studied how Earth's oceans and atmosphere affect one another. The team's paper will be published today in the journal "Science." Busalacchi's co-authors are Dr. Dake Chen, University of Rhode Island, and Dr. Stephen Zebiak and Dr. Mark Cane of Columbia University's Lamont Doherty Earth Observatory, Palisades, NY.

TOGA has successfully completed its decadal mission and the world legacy of the Topical Atmosphere Ocean array and all the research infrastructure is in place. New programs will continue to move this research into operational application mode. In November, an "International Forum on Forecasting El Nino" will be held in Washington, DC. The forum will launch an International Research Institute for climate prediction.

-more-

El Nino, which can occur every two to seven years, originates in the tropical Pacific ocean and causes global-scale disruptions in normal weather patterns. When an El Nino occurs, torrential rainfall and flooding is common along the coasts of Ecuador, Peru and southeast Brazil. At the same time, Australia, Indonesia, northeast Brazil and southeast Africa experience extreme drought and famine conditions.

The impact of El Nino on the continental United States is less direct than in the tropics, but still distinct. Increased precipitation over the Gulf Coast states and warmer winter temperatures over the north-central tier of Gulf Coast states are common, with important implications for the agricultural sector of the economy.

A common indicator of El Nino occurs when the warmest water of the global ocean shifts from the International Dateline in the Pacific eastward by 3,100 miles (5,000 kilometers), increasing sea-surface temperature by 4 to 7 degrees Fahrenheit (2 to 4 degrees Centigrade). This eastward migration of a heat source critical to the atmosphere changes global weather patterns, including precipitation and temperature, far beyond the equatorial Pacific.

Forecasts of El Nino have commonly started with scientists introducing ocean-wind data models into a computer model of the ocean, which is then used separately to "force" a model of the atmosphere. At that point the two models are joined, and the likelihood of an El Nino is forecast. The new approach mathematically joins the models before introducing the data. Since the real ocean and atmosphere are closely linked, this approach yields results that lead to a more accurate forecast.

"That's the breakthrough," said Busalacchi. "This is the first time data are being assimilated into a coupled model, and that's what gives us this expanded forecasting capability.

"Developing and developed countries are getting this data through one-on-one contacts and through NOAA. They're beginning to use these forecasts to adapt to these events and to mitigate their dangers. Advances such as these suggest that it is time to implement a process to issue El Nino forecasts on a routine basis, so that the affected countries may benefit from this information," Busalacchi said.

This kind of computer model, and its use to predict changes in the Earth's environment, is the heart of NASA's Mission to Planet Earth and the U.S. Global Change Research Program. A long-term, coordinated research program, Mission to Planet Earth is designed to provide near-term benefits. The program provides improved forecasting of economically threatening climate changes such as El Nino, with improved understanding of the Earth's climate and how it changes.

Mission to Planet Earth combines surface measurements and computer models with space-based measurements to provide a view of the Earth's global environment. Busalacchi's model, for example, will increase in importance when the NASA Scatterometer begins returning worldwide data on sea-surface winds. The instrument is scheduled for launch in August 1996 aboard a Japanese satellite.

- end -

NASA press releases and other information are available automatically by sending an Internet electronic mail message to domo@hq.nasa.gov. In the body of the message (not the subject line) users should type the words "subscribe press-release" (no quotes). The system will reply with a confirmation via E-mail of each subscription. A second automatic message will include additional information on the service. Questions should be directed to (202) 358-4043.

News Release

National Aeronautics and
Space Administration

Washington, DC 20546
(202) 358-1600

For Release

Ed Campion
Headquarters, Washington, DC
(Phone: 202/358-1780)

Lisa Malone
Kennedy Space Center, FL
(Phone: 407/867-2468)

September 25, 1995

RELEASE: C95-n

LOCKHEED MARTIN SHUTTLE PROCESSING CONTRACT EXTENDED

NASA's John F. Kennedy Space Center, FL, has extended for one year its Space Shuttle processing contract with Lockheed Martin Space Operations, Titusville, FL. The value of the contract option is $638 million.

This cost-plus-award-fee contract option covers the period beginning Oct. 1, 1995 through Sept. 30, 1996. The total contract value, including this one-year option, is $6.9 billion.

Lockheed Space Operations Co. was awarded the Shuttle Processing Contract in 1983. That agreement provided for a three-year period of performance and four three-year options. This most recent extension would have been the last of the three-year options. However, NASA is planning to have a Shuttle prime contractor in place within that time frame and therefore decided to convert the last option into three one-year option periods.

Lockheed Martin is responsible for complete processing services, including preparation, checkout, launch, landing and recovery of the Space Shuttle for each mission. Lockheed Martin also is responsible for operation and maintenance of related processing facilities and ground services at KSC.

-end-

NASA press releases and other information are available automatically by sending an Internet electronic mail message to domo@hq.nasa.gov. In the body of the message (not the subject line) users should type the words "subscribe press-release" (no quotes). The system will reply with a confirmation via E-mail of each subscription. A second automatic message will include additional information on the service. Questions should be directed to (202) 358-4043.

News Release

National Aeronautics and
Space Administration

Washington, DC 20546
(202) 358-1600

For Release

Terri Hudkins
Headquarters, Washington, DC
(Phone: 202/358-1977)

September 25, 1995

RELEASE: C95-o

OKLAHOMA STATE UNIVERSITY SELECTED FOR EDUCATION CONTRACT

Oklahoma State University, Education and Research Foundation Inc., (OSU), Stillwater, OK, was selected for negotiations leading to the award of a cost-reimbursement contract to operate the NASA Aerospace Education Services Program (AESP).

The contract will include a basic one-year performance period, beginning on or about Oct. 1, 1995, plus four one-year options. The proposed cost for the five-year program is estimated at $30 million.

The purpose of the program is to implement education reform initiatives which specifically address NASA mission requirements, National Education Goals, and the existing and emerging standards for science, mathematics and technology. The AESP will provide teachers with instructional materials and strategies which reflect needs and demands of the 21st century.

OSU will provide personnel, services and materials to manage and operate NASA's AESP in support of educational activities at NASA Headquarters and its field centers.

NASA established the AESP to reach teachers, students and the public with new scientific and technical knowledge. Under the contract, OSU will focus on elementary and secondary schools, and use NASA's mission to enhance the knowledge, skills and experience of teachers, capture students' interest and channel that interest into related career paths.

-end-

NASA press releases and other information are available automatically by sending an Internet electronic mail message to domo@hq.nasa.gov. In the body of the message (not the subject line) users should type the words "subscribe press-release" (no quotes). The system will reply with a confirmation via E-mail of each subscription. A second automatic message will include additional information on the service. Questions should be directed to (202) 358-4043.

Video Advisory

National Aeronautics and
Space Administration

Washington, DC 20546
(202) 358-1600

For Release

September 25, 1995

Dwayne Brown
Headquarters, Washington, DC
(Phone: 202/358-1600)

VIDEO ADVISORY: V95-144

UPCOMING SPACE SHUTTLE MISSION EXPERIMENTS ON NTV TUESDAY

Tuesday's NASA Television video news file will feature footage of some of the many experiments that will be aboard NASA's next Space Shuttle mission, STS-73, scheduled for launch on Thursday, September 28. NTV also will air interviews with the remainder of the STS-73 crew and replay features on the progress of building the international Space Station and NASA's Optical Transient Detector, being used to study how tornadoes are formed.
Video News Files are aired each day at noon, 3, 6, and 9 p.m. EDT.

ITEM #1: STS-73 EXPERIMENTS **TRT: tbd**
Compilation of several experiments to fly aboard the next Shuttle mission
ITEM #2: FUNCTIONAL CARGO BLOCK **TRT: tbd**
Russian engineers show first hardware element of international Space Station.
ITEM #3: SPACE STATION NODE **TRT: tbd**
Russian hardware built for international Space Station.
ITEM #4: INTERNATIONAL SPACE STATION ANIMATION **TRT: :25**
Animation of the international Space Station.
ITEM #5: SPACE STATION MODULE COMPLETED **TRT: 2:00**
U.S. pressurized module for Space Station completed last March.
ITEM #6: ASTRONAUTS TEST SPACE TOOLS **TRT: 2:00**
Astronauts practice assembly techniques for international Space Station.
ITEM #7: INTERVIEW -- ASTRONAUT MARK LEE **TRT: :55**
Explains how astronauts use the Neutral Buoyancy Lab to train for future spacewalk
ITEM #8: STS-73 ASTRONAUT MICHAEL LOPEZ-ALEGRIA **TRT: tbd**
ITEM #9: STS-73 ASTRONAUT FRED LESLIE, PHD **TRT: tbd**
ITEM #10: STS-73 ASTRONAUT ALBERT SACCO JR., PHD **TRT: tbd**
ITEM #11: STS-73 TRAINING **TRT: tbd**
Crew preparing for upcoming flight
ITEM #12: TORNADOES **TRT: 1:45**
Ground footage of tornadoes.
ITEM #13: OPTICAL TRANSIENT DETECTOR **TRT: :57**
NASA satellite provides clues to role of lightning in formation of severe weather.
ITEM #14: INTERVIEW DR. HUGH CHRISTIAN **TRT: :40**
NASA Atmospheric scientist explains benefits of using OTD to study weather.

NASA Television is broadcast on Spacenet 2, transponder 5, channel 9, C-Band, located at 69 degrees West longitude, with horizontal polarization. Frequency will be on 3880.0 megahertz, with audio on 6.8 megahertz.

-end-

News Release

National Aeronautics and
Space Administration

Washington, DC 20546
(202) 358-1600

For Release

September 25, 1995

Brian Dunbar
Headquarters, Washington, DC
(Phone: 202/358-1547)

Steve Roy
Marshall Space Flight Center, Huntsville, AL
(Phone: 205/544-0034)

RELEASE: 95-160

NASA INSTRUMENT ILLUMINATES LINKS BETWEEN LIGHTNING, TORNADOES

A NASA lightning detector is intriguing scientists with the possibility of identifying the formation of tornadoes and severe storms from space.

Research scientists at the Marshall Space Flight Center, Huntsville, AL, using data from the Optical Transient Detector (OTD), are building a global picture of the role of lightning in the atmosphere, including lightning produced by large storms. These data are significant because the "flashrate" of lightning may provide, in conjunction with other detection systems, an indication of the formation of tornadoes.

Launched April 3 aboard a Pegasus rocket, NASA's OTD has been observing lightning flashes as it passes over severe storms. Taking advantage of the perspective from orbit, the detector gives researchers a much more comprehensive view of lightning generated by severe storms than is generally available from ground observations.

On April 17, as the OTD passed over a severe storm in Oklahoma, the rate of lightning flashes peaked at more than 60 per second, 40 seconds into the satellite's pass. The flash rate then decreased, and approximately one minute after the pass, observers saw a tornado touch the ground, said Dr. Hugh Christian, Principal Investigator of the OTD at Marshall's Global Hydrology and Climate Center.

Overall, the instrument detected almost 200 lightning flashes during its three-minute pass. In contrast, the ground-based National Lightning Network, which detects only cloud to ground flashes, located nine flashes during the same period. This large difference suggests the tornadic storm was producing primarily intracloud lightning.

-more-

"We saw much more intense lightning activity produced by these clouds than was observed on the ground, both before and during tornado formation," explained Christian. "In the next months we plan to perform detailed studies on the relationship between intracloud lightning and the formation of severe weather."

The increasing, then decreasing, lightning-flash rates produced by the Oklahoma storm may mirror the life cycle of the air mass of storms and might be an indication of the onset of downdrafts occurring before a tornado is formed, according to Christian.

"While the Optical Transient Detector is a technological demonstration and is being used for ongoing lightning studies, it certainly provides a 'tantalizing carrot' of future lightning-detection possibilities," said Christian. "Further research and the experience gained with this lightning instrument could help develop sensors for real-time severe weather warnings and assist with identification of the formation of tornadoes."

Data from the OTD are being analyzed by scientists located at the Global Hydrology and Climate Center in Huntsville. Data are processed in the climate center's Optical Transient Detector Science Computer Facility and will be archived and distributed in the Earth Observing Systems Data Information System.

-end-

NASA press releases and other information are available automatically by sending an Internet electronic mail message to domo@hq.nasa.gov. In the body of the message (not the subject line) users should type the words "subscribe press-release" (no quotes). The system will reply with a confirmation via E-mail of each subscription. A second automatic message will include additional information on the service. Questions should be directed to (202) 358-4043.

News Release

National Aeronautics and
Space Administration

Washington, DC 20546
(202) 358-1600

For Release

September 26, 1995

Don Nolan-Proxmire
Headquarters, Washington, DC
(Phone: 202/358-1983)

John Childress
Dryden Flight Research Center, Edwards, CA
(Phone: 805/258-2664)

RELEASE: C95-p

ANALYTICAL SERVICES AND MATERIALS, INC. AWARDED CONTRACT

NASA has selected Analytical Services and Materials, Inc. for a fixed price requirements plus-award-fee contract to support flight projects at the Dryden Flight Research Center, Edwards, CA. Total contract period of performance, including phase-in and options, will be from October 2, 1995 through September 30, 2000. Total proposed amount for the contract price is approximately $32.1 million.

The engineering and technical services contract covers areas such as aerodynamics, flight dynamics, flight instrumentation, aircraft maintenance and mechanical fabrication on research and development aircraft.

By using streamlined procurement procedures, the Dryden source evaluation board evaluated ten offers and the contract was awarded in only 84 days compared to the standard 120-day evaluation period.

-end-

NASA press releases and other information are available automatically by sending an Internet electronic mail message to domo@hq.nasa.gov. In the body of the message (not the subject line) users should type the words "subscribe press-release" (no quotes). The system will reply with a confirmation via E-mail of each subscription. A second automatic message will include additional information on the service. Questions should be directed to (202) 358-4043.

News Release

National Aeronautics and
Space Administration

Washington, DC 20546
(202) 358-1600

For Release

Ray Castillo
Headquarters, Washington, DC
(Phone: 202/358-4555)

Doug Ward
Johnson Space Center, Houston, TX
(Phone: 713/244-7926)

Jim Keller
Boeing Defense and Space Group, Huntsville, AL
(Phone: 205/461-2803)

September 26, 1995

Release: 95-161

U.S. STRUCTURE FOR INTERNATIONAL SPACE STATION COMPLETED

The main structure of the U.S. laboratory module -- centerpiece of the U.S. hardware for the international Space Station -- has been successfully completed.

Astronauts will perform continuous scientific experiments inside the pressure hull of the laboratory. The aluminum module is 28 feet long, 14 feet wide and weighs about 6,000 pounds. It is scheduled to be launched to the international Space Station in November 1998.

"This is a major accomplishment for the international Space Station program," said Wil Trafton, Space Station Program Director. "This laboratory module is central to the Space Station's mission. Within this lab, astronaut researchers will carry out scientific experimentation for the benefit of all of us here on Earth."

Technicians at NASA's Marshall Space Flight Center in Huntsville, AL, began welding the lab module in July. It comprises three cylindrical sections, two bulkheads, or end cones, and contains the hatch openings through which astronauts will enter and exit the lab. The lab's exterior has a "waffle" pattern, which strengthens the hull against the harsh environment of space. A 20-inch diameter window is located on one side of the module's center cylinder.

-more-

"I congratulate all the members of the Space Station team on the completion of this piece of space hardware," said Randy Brinkley, Space Station Program Manager. "The manufacturing progressed without any problems and all 3,100 inches of weld were of exceptional quality. This is another major piece of Space Station hardware completed on time."

In early November, the lab will be moved to a boring mill where its surfaces will be machined for various functions, including drilling small holes for hatch seals and berthing mechanisms. It later will be covered with a debris-shield blanket, made of a material similar to that used in bullet-proof vests. A thin aluminum debris shield then will be placed over the blanket for added protection.

The lab is being built by Boeing Defense and Space Group in Huntsville. Boeing, prime contractor for the Space Station, has hardware in different stages of completion. Both Node 1 and Node 2, the connecting passageways which will link Space Station's other modules, have been welded. Node 1 is now being machined in the boring mill. Node 2 completed machining and is being outfitted with internal equipment.

With the laboratory welding complete, the pieces of the Space Station crew quarters, or habitat module, now will be welded together. The habitat module will serve as the 'home away from home' where astronauts will eat and sleep. Habitat module welding will begin in October and be completed in December.

Overall, the United States has produced 54,000 pounds of Space Station hardware; by the end of the year, the United States will have completed nearly 80,000 pounds. Currently, the project's international partners have manufactured over 60,000 pounds of hardware.

The first piece of the international Space Station is scheduled to be launched in just over two years, in November 1997. The U.S. Node 1 will be launched one month later. A series of flights over five years will complete the Space Station in June 2002.

-end-

EDITOR'S NOTE: Media representatives wishing to obtain images accompanying this release may call the NASA Headquarters Newsroom Photo Office at 202/358-1900.

Color: 95-HC-574 B&W: 95-H-585

NASA press releases and other information are available automatically by sending an Internet electronic mail message to domo@hq.nasa.gov. In the body of the message (not the subject line) users should type the words "subscribe press-release" (no quotes). The system will reply with a confirmation via E-mail of each subscription. A second automatic message will include additional information on the service. Questions should be directed to (202) 358-4043.

Video Advisory

National Aeronautics and
Space Administration

Washington, DC 20546
(202) 358-1600

For Release

September 27, 1995

David E. Steitz
Headquarters, Washington, DC
(Phone: 202/358-1730)

VIDEO ADVISORY: V95-145

LAUNCH OF SPACE SHUTTLE COLUMBIA ON NTV THURSDAY

Space Shuttle Columbia is set for launch from NASA's Kennedy Space Center, FL, tomorrow morning at 9:35 a.m. EDT. Columbia and her crew, on the STS-73 mission, will be conducting the Second Microgravity Laboratory mission. This 16-day flight will continue a cooperative effort between the U.S. government, universities and industry to expand the frontiers of science and technology in the microgravity environment of space. Following launch, NASA TV will provide 24-hour coverage of the mission. Daily video news feeds will resume after the landing of Columbia.

During the STS-73 mission, media may obtain mission updates by contacting the following NASA Newsrooms:

Shuttle launch operations	Kennedy Space Center, FL	407/867-2468
During mission	Johnson Space Center, Houston	713/483-5111

During STS-73, NASA will provide continuous coverage on the mission via the Internet and the Space Shuttle home page and the World Wide Web. The URL is:

http://shuttle.nasa.gov

Shuttle sighting opportunities, mission imagery and mission information are available on the Shuttle home page. This information will be updated daily.

NASA Television is broadcast on Spacenet 2, transponder 5, channel 9, C-Band, located at 69 degrees West longitude, with horizontal polarization. Frequency will be on 3880.0 megahertz, with audio on 6.8 megahertz.

-end-

Video Advisory

National Aeronautics and
Space Administration

Washington, DC 20546
(202) 358-1600

For Release

September 28, 1995

David E. Steitz
Headquarters, Washington, DC
(Phone: 202/358-1730)

VIDEO ADVISORY: V95-146

CELEBRATION OF PIONEER 11, AIRBORNE LASER SENSOR ON NTV

NASA Television on Friday will air footage and an interview celebrating the accomplishments of the Pioneer 11 spacecraft. NASA will cease communications with the spacecraft due to diminishing spacecraft power capabilities. Pioneer 11 has provided valuable science for over 22 years. Pioneer 11 was the first spacecraft to provide close-up images of Saturn, has passed outside the orbit of Pluto, and is now headed into interstellar space. Following the Pioneer 11 features, a piece on the Lidar Atmospheric Sensing Experiment (LASE) will be shown. The aircraft-based laser water vapor sensor helps atmospheric scientists better understand the distribution of water vapor in the atmosphere. These studies may lead to space-based experiments that examine Earth's atmosphere.

Video News Files are aired daily at noon, 3, 6, and 9 p.m. EDT.

ITEM #1: PIONEER 11 HISTORIC FOOTAGE **TRT: 20:00**
Footage celebrating over 22 years of the Pioneer 11 Program.

ITEM #2: INTERVIEW WITH FRED WIRTH **TRT: 1:37**
Pioneer 11 project manager discusses the spacecraft's accomplishments.

ITEM #3: AIRCRAFT BASED LASER WATER VAPOR SENSOR **TRT: tbd**
LASE used to study water vapor and atmospheric science.

NASA Television is broadcast on Spacenet 2, transponder 5, channel 9, C-Band, located at 69 degrees West longitude, with horizontal polarization. Frequency will be on 3880.0 megahertz, with audio on 6.8 megahertz.

-end-

News Release

National Aeronautics and
Space Administration

Washington, DC 20546
(202) 358-1600

For Release

September 29, 1995

Don Savage
Headquarters, Washington, DC
(Phone: 202/358-1547)

Ann Hutchison
Ames Research Center, Mountain View, CA
(Phone: 415/604-4968)

RELEASE: 95-163

PIONEER 11 TO END OPERATIONS AFTER EPIC CAREER

After nearly 22 years of exploration out to the farthest reaches of the Solar System, one of the most durable and productive space missions in history will come to a close.

Now beyond the orbit of Pluto and more than four billion miles from Earth, NASA's unmanned Pioneer 11 spacecraft is heading out into interstellar space. Because the spacecraft's power is too low to operate its instruments and transmit data, on September 30 NASA will cease daily communications with the spacecraft. At that distance, faint signals from Pioneer 11 traveling at the speed of light take over six hours to reach Earth.

The spacecraft will continue speeding out into interstellar space toward the center of the Milky Way, taking an engraved gold plaque bearing a message about Earth to other civilizations which it may encounter. Pioneer 11 will pass near the star Lambda Aquila in almost four million years.

"Americans should remember Pioneer 11 as a great achievement," said NASA Administrator Daniel Goldin. "This is the little spacecraft that could, a venerable explorer that has taught us a great deal about the Solar System and, in the end, about our own innate drive to learn. Pioneer 11 is what NASA is all about -- exploration beyond the frontier."

"Pioneer 11 has had a spectacular life," said project manager Fred Wirth of NASA's Ames Research Center, Mountain View, CA. "It was the second spacecraft to visit Jupiter, roaring through the heart of the planet's huge radiation belts at 107,373 mph, by far the fastest speed ever traveled by a human-made object."

-more-

Pioneer 10 and 11 were recommended by the Space Science Board of the National Academy of Sciences in 1968 as low-cost exploratory missions to the giant planets Jupiter and Saturn, approved by NASA in February 1969, and launched three and four years later, respectively.

Launched in April 1973, Pioneer 11 reached Jupiter in December 1974, following Pioneer 10, which flew by the planet a year earlier. It came in under the giant planet's south pole and skimmed within 26,600 miles of Jupiter's cloud tops. The fly-by was so close -- the closest passage ever made past Jupiter -- that the spacecraft received heavy bombardment from Jupiter's radiation belts, which are 40,000 times more intense than Earth's. Only Pioneer's extreme speed saved its electronics from severe damage.

Maps of Jupiter's severe radiation environment provided by Pioneer 10 and 11 permitted the later and much more sophisticated missions Voyager 1 and 2, and the ESA-NASA spacecraft Ulysses, to be designed to survive Jupiter's radiation. They also paved the way for Galileo's arrival at Jupiter this December, and the Cassini mission to Saturn in 1998.

The gravity assist resulting from the close fly-by threw the craft 100 million miles above the plane of the planets and 1.5 billion miles completely across the inner solar system to Saturn. Pioneer flew high enough above the Sun's equatorial plane (17 degrees) to discover the true character of the Sun's magnetic field, until then a mystery to scientists.

In 1979, Pioneer 11 flew within 13,000 miles of Saturn, becoming the first spacecraft to visit that planet. Among its discoveries were two new moonlets and a new ring, and it charted the magnetosphere, magnetic field and the general structure of Saturn's interior. The spacecraft's instruments also measured the heat radiation from Saturn's interior, and found that its planet-sized moon, Titan, was too cold to support life.

In 1990 Pioneer 11 became the fourth spacecraft to journey beyond the Solar System, heading in the same direction that the Sun moves through interstellar space. Pioneer 10 is traveling in the opposite direction, and with the two Voyager spacecraft will continue to return information about the Sun's influence deep in space.

Although running out of power, most systems aboard the remarkably durable Pioneer 11 spacecraft are still healthy. For many years the spacecraft has been sending back limited data on the solar wind, magnetic field and cosmic rays, but it can no longer be maneuvered to point its antenna accurately at the Earth. Starting tomorrow, NASA controllers will use the Deep Space Network antennas to listen for the spacecraft's signal for about two hours every two to four weeks to gather whatever information they can, down from about eight to ten hours per day.

"Some time in late 1996, its transmitter will fall silent altogether, and Pioneer 11 will travel as a ghost ship in our galaxy," Wirth said. "We plan to listen to it once or twice a month to learn about the fade-down process. This will help us understand the future fate of its sister craft, Pioneer 10," he said.

Pioneer 10 continues to return scientific data and may have enough power to last until 1999. At almost six billion miles, Pioneer 10 is the most distant object built by humans.

The Pioneer project is managed by NASA Ames Research Center, Mountain View, CA., for the Office of Space Science, Washington, DC. The Pioneers were built by TRW Systems, Redondo Beach, CA.

- end -

NASA press releases and other information are available automatically by sending an Internet electronic mail message to domo@hq.nasa.gov. In the body of the message (not the subject line) users should type the words "subscribe press-release" (no quotes). The system will reply with a confirmation via E-mail of each subscription. A second automatic message will include additional information on the service. Questions should be directed to (202) 358-4043.

News Release

National Aeronautics and
Space Administration

Washington, DC 20546
(202) 358-1600

For Release

September 29, 1995

Don Savage
Headquarters, Washington, DC
(Phone: 202/358-1547)

Fred Brown
Goddard Space Flight Center, Greenbelt, MD
(Phone: 301/286-7277)

RELEASE: 95-164

SPARTAN 201 SUCCESSFULLY ACCOMPLISHED MISSION

NASA scientists reported today that Spartan 201 successfully completed its mission on a Space Shuttle flight earlier this month.

Project Scientist Dick Fisher, at the Goddard Space Flight Center, Greenbelt, MD, reported that the tapes retrieved from the Spartan 201 indicated that the free-flying spacecraft appears to have done its job properly and both instruments worked as planned through virtually all of the mission.

Concern about whether the Spartan had operated correctly was raised when the spacecraft was to be retrieved during the STS-69 mission on Sept.10. At that time, the crew reported that Spartan was rotating slowly, and its batteries seemed to have been drained. Until the spacecraft could be examined following landing, it was not possible to know whether it had accomplished its mission of observing the Sun's northern polar regions.

"The White Light Coronagraph instrument obtained spectacularly good data over 95 percent of the planned observing sequence," Fisher said.

Data from the Spartan 201 Ultraviolet Coronagraph Sepctrometer instrument are being examined, and scientists say that preliminary findings show the data are excellent.

Starting in the near future, scientists will begin an in-depth study of the data contained on the tapes from the two Spartan 201 instruments. Engineers will study "housekeeping data" from the spacecraft to determine why the Spartan behaved as it did.

- end -

NASA press releases and other information are available automatically by sending an Internet electronic mail message to domo@hq.nasa.gov. In the body of the message (not the subject line) users should type the words "subscribe press-release" (no quotes). The system will reply with a confirmation via E-mail of each subscription. A second automatic message will include additional information on the service. Questions should be directed to (202) 358-4043.

News Release

National Aeronautics and
Space Administration

Washington, DC 20546
(202) 358-1600

For Release

Jim Cast
Headquarters, Washington, DC
(Phone: 202/358-1779)

September 29, 1995

RELEASE: 95-165

"WORLD-CLASS" ADVANCED SPACE CONCEPTS SOLICITED

NASA has issued a Cooperative Agreement Notice (CAN) in search of highly-innovative research projects from non-NASA sources to investigate new concepts for future government and commercial space applications.

NASA intends to fund approximately eight "Advanced Concepts Research Projects" (ACRPs) in Fiscal Year 1996. A budget of $1 million is planned with an expected duration of each individual project to be 24 months. Appropriate cost-sharing will be required from for-profit organizations.

"In today's environment of belt-tightening, downsizing and reinvention, modest programs such as ACRP are absolutely essential for keeping the "pipelines" open for identifying, developing and advancing new and far-reaching concepts," said NASA's Dr. John E. Mansfield, Associate Administrator for Space Access and Technology, Washington, DC.

A wide array of potential areas of technical interest is suggested in the CAN. These areas support NASA's overall strategic objectives and range from aerodynamics, communications systems and space technology to materials, robotics, space structures and telepresence systems.

Principal Investigators for selected projects will be known as "ACRP Fellows." While their research will be performed largely at their home institutions, interaction with other "Fellows" and team members will be provided through workshops, meetings and through innovative infrastructures that will utilize the Internet.

Letters of Intent must be submitted by prospective proposers by October 27, 1995. Final proposals must be received no later than December 1.

-more-

The ACRP program is sponsored by the Advanced Concepts Office, NASA Headquarters, Office of Space Access and Technology, Washington, DC.

NOTE TO EDITORS: The complete ACRP CAN (approximately 40 pages) may be accessed via the Internet at the following address:
http://www.hq.nasa.gov/office/acrp/oac.html

A printed copy of the CAN also is available from the NASA Headquarters Newsroom, Washington, DC (202/358-1600).

- end -

NASA press releases and other information are available automatically by sending an Internet electronic mail message to domo@hq.nasa.gov. In the body of the message (not the subject line) users should type the words "subscribe press-release" (no quotes). The system will reply with a confirmation via E-mail of each subscription. A second automatic message will include additional information on the service. Questions should be directed to (202) 358-4043.