WSN SPACEFLIGHT HISTORY SPECIAL REPORT:

APOLLO-SOYUZ TEST PROJECT (ASTP): SOVIET AND AMERICAN PRESS KIT TECHNICAL DATA

The material in this report has been typeset by WSN directly from the Soviet and American press kits. The Soviet translation into English is quite poor, but we have chosen to copy the material verbatim in order to retain the "flavor" of the press kit. (Some of the passages are rather comical!) Everything in the Soviet press kit pertaining to their spacecraft and mission control facilities is reprinted here.

SOYUZ SPACECRAFT DESCRIPTION

Main Characteristics:

SPACECRAFT MAXIMUM WEIGHT: 6.8 tons [14,990 lbs.]
MAXIMUM LENGTH: 7.5 meters [24' 7¼"]
MAXIMUM DIAMETER: 2.72 meters [8' 11"]
DIAMETER OF THE HABITABLE MODULE: 2.2 meters [7' 2½"]
SOLAR PANEL SPAN: 8.37 meters [27' 5½"]
TOTAL VOLUME OF HABITABLE MODULES: 10 m^3 [353 cubic feet]

Soyuz Constructive Arrangement:

The Soyuz spacecraft consists of three main modules: Descent Vehicle (DV), Orbital Module (OM), and Instrument-Assembly Module (IAM). The left part of the spacecraft consists of the docking system and Orbital Module, which is joined to the Descent Vehicle. The Descent Vehicle in turn is joined through a front heat shield to the Instrument-Assembly Module with solar panels installed. Mechanical connection of the spacecraft modules is performed using the pyrotechnic joints. Location of the main outer elements of the spacecraft systems is shown in the Soyuz spacecraft general view. The Soyuz spacecraft consists of the following main systems:

* Attitude motion control system for flight and descent;
* Rendezvous and correcting propulsion system;
* Approach-orientation propulsion system;
* Radio communication systems;
* Electrical power supply system;
* Docking system;
* Radio guidance system and system for providing rendezvous and approach using optical devices;
* Parachute system and soft landing system;
* Life support system complex; and
* Onboard equipment control system.

The Descent Vehicle is intended for crew location during insertion into orbit, orbital flight, controlled descent through the atmosphere, parachuting and landing. The descent vehicle is a hermetically-sealed compartment, provided with two viewing windows on its sides and one window with sighting device. The shell of the compartment is covered with heat shielding material on its outside, and the thermal insulation and decorative materials on its inside. Cosmonauts' panel spacecraft control handles equipment of the main and supporting systems, containers for the scientific equipment to be returned and emergency kit for the crew are also located in the descent vehicle. For the ASTP there is an additional control panel in the descent vehicle to provide compatible radio stations and external lights control. Special lights and additional brackets for TV camera mounting are installed to provide colour TV transmission.

The Orbital Module is intended for conducting scientific experiments, for crew spacecraft-to-spacecraft transfers and for the rest of the crew. The orbital module consists of two hemispheres connected by a cylindrical insert. The androgynous peripheral docking mechanism with an internal hatch, having a cross-sectional diameter of 0.8 meters is mounted on it. The orbiter module has two viewing windows. The third window is in the cover of the docking mechanism hatch. At the bottom of the module there is a hatch connecting the Orbital Module and the Descent Vehicle, as well as a side hatch for the crew to enter the spacecraft on the launch pad. The interior of the module consists of a sideboard and a "sofa," which contain control panel, instrumentation and equipment of the main support systems. Scientific equipment is also located in the Orbital Module. To the joint Apollo/Soyuz mission the following equipment is provided in the Orbital Module: transponder of the Apollo VHF-radio station with antennas and autonomous power supply for it; junction box for connecting the communication or television equipment transferred by astronauts from Apollo to Soyuz during transfers; additional VHF transceiver; and compatible system automatics unit. Special lights and additional brackets for TV cameras and cine and photography equipment are installed in the module to provide colour TV transmission to Earth and movie and picture shooting. Antennas of compatible VHF-radio stations, antennas of radio and television systems, main and additional docking targets for approach and docking in a manual control mode are located on the module exterior in the vicinity of the external TV camera.

The Instrument-Assembly Module is intended for carrying the principal apparatus and equipment required for orbital flight. This module structurally consists of intermediate, instrument and assembly sections. The intermediate section which joins the descent vehicle with the instrument section has a truss structure. The engines with a thrust of 10 kg. (22 lbs.) each, propellant tanks and propellant feed system of the approach and orientation engines system, are installed in this section. On the intermediate section exterior there are: the small radiator of the thermal control system; front attachment points of the solar panels; and antenna of the command-radio link. The pressure-sealed instrument section has the shape of a squat cylinder with two ends. The equipment of the attitude motion control system, spacecraft onboard equipment control system, radio communication system, program-timing device, radio telemetry system, electric power supply system are located in the instrument section. The infra-red orientation sensor and sun sensor are mounted on the instrument section outer surface. The assembly section is of a cylindrical shell design which is connected with a conical shell which ends with the base mounting ring for the spacecraft installation on the launch vehicle. On the outside of the assembly section there are a radiator of the thermal control system, four approach and orientation engines with a thrust of 10 kg each, 8 orientation engines with a thrust of 1 kg (2.2 lbs.) each, and rear attachment points of the solar panels. The rendezvous-correcting propulsion system is located in the assembly section. It consists of a main engine, a back-up engine, propellant tanks and bipropellant feed system. In addition to that, the radio communication and telemetry antennas, the ion sensors of the orientation system and some of the batteries of the electric power supply system are installed in the vicinity of the base ring. The instrument-assembly module also contains solar batteries in the form of two "wings," consisting of three panels each. Antennas for radio communication and telemetry in the VHF range and short-wave band and onboard color orientation lights are located on the end panels of the solar batteries. For the Apollo/Soyuz test project the following elements of the compatible rendezvous system are mounted on the instrument-assembly module: flashing light beacons; an element of the additional docking target (on the instrument section); and onboard color orientation lights (on the ends of solar panels). The retroreflectors for joint ultraviolet absorption experiments are mounted in the orbital and instrument assembly modules.

The Soyuz modules are externally protected with shield vacuum heat insulation of green color. Moreover, the Soyuz spacecraft is covered with a jettisonable nose fairing equipped with an emergency recovery propulsion system to protect the spacecraft during the phase of passing lower atmosphere layer.

ANDROGYNOUS PERIPHERAL DOCKING SYSTEM

The APDS is designed to provide spacecraft docking and undocking and is one of the main compatible means for the spacecraft rendezvous and docking, that will be tested during the ASTP mission. The APDS is a modified docking system, which differs from previous versions developed according to the "pin-cone" schematic, and used for docking both the USSR and US spacecraft. The Docking System performs the following functions: impact energy absorption, initial mechanical connection, spacecraft alignment and retraction, spacecraft hard mechanical connection and docking interface sealing, and spacecraft undocking and separation. Docking can be performed under the following conditions: spacecraft approach rate is 0.05 - 0.3 m/sec (0.16 - 0.98 feet/sec); longitudinal axes displacement up to 0.3 m (.98 feet); pitch, yaw, and roll misalignment up to 7°; angular velocities up to 1°/sec for an active spacecraft and 0.1°/sec. for a passive spacecraft; and lateral relative velocity up to 1.0 m/sec (3.3 ft/sec). APDS configuration provides an inner tunnel for the crews to transfer from one spacecraft to the other. When docking, APDS can be configured in either active or passive mode. The cosmonauts are provided with information on APDS primary units operation. **APDS DESIGN:** The docking system consists of the following principal assemblies:

DOCKING SYSTEM BASE is the main structural member to which the main docking system assemblies are attached. On the front end of the base there is a structural ring, the other end of the base has a flange for attachment to the spacecraft orbital module. The base is a pressure-tight construction and consists of a cylindrical part, forming a tunnel with a hatch which is locked from inside.

GUIDE RING consists of a ring, hollow in cross-section and three guides located 45° to the longitudinal axis of the docking system. The guide ring is installed on six supporting rods, attached in pairs. Supporting rods attachments are the kinematic connections between the rods and provide for the guide ring lateral displacement and roll during attenuation. The guide ring supports three capture latches with undocking drives.

BODY MOUNTED LATCHES together with capture latches perform spacecraft docking. They are installed on the docking system base and are equipped with solenoids to perform unlatching by a passive spacecraft.

RODS support the guide ring and connect it with the guide ring drive and docking system base. The rods are ball screws that convert the stroke of the screw rod into rotary motion of the nut and vice versa. The rod configuration allows it to change length relative to the attachment points. The rods are attached to the base through joints with three degrees of freedom which transmit the rotary motion of the rods to the base assembly. The rods are attached to the guide ring at three points through rod connecting joints which provide kinematic connection between the crews.

GUIDE RING DRIVE together with differential assembly performs two basic functions. The first function is to provide for rotation of the guide ring about lateral axes (pitch and yaw) during the impact attenuation. The second function is to retract and extend the guide ring. The guide ring rotation is accomplished

through misalignment of the length of three rod pairs. The misalignment is accomplished by two gear differentials. The impact energy is absorbed by spring loaded mechanisms, which also serve to return the guide ring to its initial position. The supporting rods are moved by a drive, having two motors and an additional differential.

STRUCTURAL RING LATCH provides hard, pressure-tight connection of the spacecraft. They consist of eight active and eight passive hooks, electrical drive installed on one of the latches and closed-loop cables connecting them. Each active hook has a cam-operated mechanism, which performs its opening and tightening. Corresponding hooks of the passive docking system are captured by active hooks. The passive hook has a stack of preloaded bellville springs providing a definite force for the docking interface preloading. Each passive and active hook is equipped with a pyro-bolt to provide practically instantaneous undocking.

GUIDE PIN together with the socket is designed for the spacecraft exact alignment during the final phase of retraction. When the DS is in active mode, the pin can move radially to compensate for thermal and structural distortion of the structural ring. When the docking system is in passive mode, the guide pin is automatically locked in its central position. The structural ring is also equipped with docking interface seal contact sensors and sensors indicating the interface seal compression.

SPRING THRUSTERS are located on the docking ring and provide spacecraft separation when the latches are opened.

DOCKING INTERFACE SEAL will provide pressure integrity of the docking interfaces. It consists of two concentric rubber ring seals on each system. The sealing is "seal-to-seal" type.

THE MANHOLE COVER is a part of the docking system and is used to close the transfer tunnel of the spacecraft. The manhole locking/unlocking is manually performed by the crew. The manhole is sealed by a sealing mechanism, which has eight eccentric type latches, the latter being connected with each other by means of closed cable connection. In case the cover sealing mechanism fails, several or even all hooks can be opened or closed by means of its disassembling and subsequent assembling. The Docking System is equipped with alarm and meter system which provide all data about DS operation.

APDS OPERATION DURING DOCKING/UNDOCKING: The Soyuz docking system will first operate in a passive mode, and during rendezvous in an active mode. Prior to docking the active DS guide ring is extended into forward position, and the passive DS guide ring is retracted to its most rearward position. During approach the spacecraft are oriented relative to each other so that the DS guides of one spacecraft are approximately opposite the DS hollows of the other. During spacecraft contact (impact) the guides of one DS slide along the guides of the other one, thus absorbing the spacecraft impact energy; then the active DS guide ring contacts with the passive, and initial capture and spacecraft alignment is accomplished. Then the spacecraft retraction and their rigid coupling is performed. ATTENUATION OF SPACECRAFT RELATIVE MOTION is realized by the guide ring's moving in any direction (on all six degrees of freedom) an energy absorbing units (springs and brakes). The ring movement in all direction is provided by changing the length of the six rods. THE INITIAL CAPTURE is performed by three capture latches on the guide ring, which captures body-mounted latches of the passive system. THE SPACECRAFT ALIGNMENT is achieved by spring mechanisms, located on the guide ring and on the drive. In case the spring energy is not adequate for alignment, the active DS ring is extended into its most forward position (till stop) by means of the drive, and the spacecraft are aligned approximately. THE GUIDE RING RETRACTION is performed by means of the drive after the spacecraft alignment. During the last phase of retraction the guide pins and sockets, located on the structural ring, perform spacecraft final alignment. When retracting and extending the guide ring electromagnetic locks, which prevent the guide ring misalignment, can be activated. SPACECRAFT RIGID DOCKING After the docking interface touching structural latches perform rigid docking and interface sealing, then the docking interface and spacecraft tunnel leak tests are performed. UNDOCKING is performed by an active spacecrafts capture latches release and then by opening the structure latch hooks. If necessary, undocking can be performed by a passive spacecraft by body-mounted latches release and opening the structure latch passive hooks. SPACECRAFT SEPARATION is performed by spring thrusters, located on the structural rings of both systems, after the latches release.

All principal operations including structural latch operation during docking and undocking are redundant. Capture latch undocking as well as structural lach active and passive hooks opening is provided by pyrotechnic devices. The docking system can perform all operations during docking/undocking automatically or each operation separately by initiating appropriate commands by cosmonauts or via command radio communication link. The system operation monitoring is performed by cosmonauts control panel indication and by the ground personnel (telemetry).

THE DIFFERENCE BETWEEN THE SOYUZ AND APOLLO DOCKING SYSTEMS The USSR and US docking system designs have considerable differences. The differences are primarily based on previous experience of each side specialists and utilization of different structural procedures in manufacturing structural elements. One of the principal differences of docking systems involve those in attenuation system and guide ring systems. Unlike the Soviet Soyuz docking system electromechanic system of the Apollo is equipped with autonomous gyro attenuators and electric drive with cable connection. Another essential difference is that the Soyuz has electric drives for capture and body-mounted latches and pyrodevices for redundant undocking.

However, despite the difference in docking system designs, the fulfillment of agreed upon principles and requirements provided their compatibility and made Soyuz/Apollo docking possible.

ATTITUDE AND MOTION CONTROL SYSTEM

ATTITUDE AND MOTION CONTROL SYSTEM FUNCTION AND STRUCTURE The Soyuz attitude and motion control system is to provide the spacecraft attitude control. This is: build-up of orientation modes; long-term maintenance of the spacecraft specific orientation - attitude hold; spacecraft attitude hold with the generation of a reaction pulse of the approach - correcting propulsion system (ACPS); approach control during the spacecraft rendezvous.

AMCS includes: command sensors; converting and switching devices; monitoring and attitude control aids and spacecraft controllers; reaction jet microengines, approach-correcting propulsion system. The spacecraft attitude control may be conducted both automatically and manually. The crew can select a control mode. Automatic modes can be initiated by ground radio commands. During automatic orientation sensing devices supply data on the spacecraft attitude and rotation rate. The onboard logic device converts these data into on-off commands for thrusters which control the spacecraft turns. The manual control loop enables the crew to orient the spacecraft to the Earth, Sun or stars. During the orientation mode the crew is sighting these reference points using optical devices or spacecraft position transducers. The spacecraft orientation accomplished by means of hand controllers which provide on-off signals to orientation engines.

COMMAND SENSORS INFRA-RED HORIZON SENSOR senses the Earth and atmosphere infra-red radiation and provides the spacecraft orientation towards the Earth center. IONIC SENSORS respond to the counter flow of ions which are the atmosphere "traces" at these altitudes. These sensors generate control signals when the spacecraft longitudinal axis deviates from its velocity vector during the spacecraft orbital motion. SUN SENSOR is used during the spacecraft orientation towards the Sun. The sensor has two side search zones and the central field of view. The Sun is usually acquired at first by one of the sensor search zone, and then it is "carried" to the sensor midpoint. ANGULAR-RATE PICKUPS are electronic/gyroscopic instruments to measure the spacecraft rotational velocity. The instruments converting units integrate velocity signals and issue control signals proportional to the spacecraft rotation angles.

Onboard the spacecraft there is a gyropackage comprising two gyros. This assembly maintains the spacecraft set orientation and allows to perform programmed turns.

VISION DEVICES, ORIENTATION MONITORS AND CONTROLLERS Vision and orientation monitoring devices and controllers are located at the crew stations in the descent vehicle. COSMONAUT'S SIGHTING DEVICE is an optical device designated for visual observation of the Earth or the other spacecraft during its approach. It has a central and peripheral field of view. The earth edge position in peripheral zones allows to orient the spacecraft towards the Earth centre. GROUND SPEED in the central field of the sighting device is used when performing its yaw orientation. On the outside of the DV windows SHADE GAUGES are located. The cosmonaut performs the spacecraft orientation towards the Sun by the shadow on the gauge screens. Using the CONTROLLERS the cosmonaut provides the spacecraft rotation or translational maneuvers. The COSMONAUT'S PANEL include data display facilities and the spacecraft control systems. The panels with two command-signal devices and the DV instrument board are used during the AMCS operation.

SOYUZ DOCKING TARGETS The main orbit-deployed docking target is located on the outside of the orbital module near the docking system. It comprises a cross placed in front of the screen which is the target base. There is also a cross pattern available on the base screen. With both crosses aligned the Soyuz X-axis is directed towards the observer. Besides the main target the orbital and instrument-assembly modules carry fixed plates with marks which serve as an additional target.

ONBOARD ORIENTATION LIGHTS Onboard orientation lights - red, green and two white lights - are mounted on solar batteries. They allow to approximately determine the approach-spacecraft mutual position. The Soyuz spacecraft will carry TWO FLASHING LIGHT BEACONS. They are to detect and identify the spacecraft during the mission dark phase at the initial stage of approach (early approach). The beacons flashing light will help to identify the spacecraft against the star background.

AMCS JET THRUSTERS AND APPROACH-CORRECTING PROPULSION SYSTEM The AMCS jet thrusters and approach-correcting propulsion system comprise 14 approach and orientation engines (AOE) each of 10 kg (22 lb.)-thrust and 8 orientation engines (OE), 1 kg (2.2 lb.)-thrust each. These thrusters are fired in various combinations according to the spacecraft control logics. They either provide control moments and make the spacecraft turn about its mass centre or they enable translational maneuvers. The descent vehicle also carries 6 control thrusters which are fired during the vehicle descent phase. The ACPS, which is designated to generate a correcting and a rate-damping reaction pulse, has a one-chamber approach-correcting engine (ACE) of 417 kg (919 lb.)-thrust and a two-chambers backup correcting engine (BCE) with steering nozzles of 411 kg (906 lb.)-thrust. The ACPS has self-contained bipropellant tanks, a propellant-feed system for each engine and appropriate automatic systems.

AMCS MODES The Soyuz flight program provides for the spacecraft different orientation and attitude hold at each mission stage. The priority of these procedures is defined by concrete purposes. Orientation modes - both automatic and manual - begin with searching reference points. The spacecraft rotates with constant speed until a specific reference point is acquired by the sensor or the cosmonaut's sighting device. Then the sensor central axis is aligned with the reference point direction. The orientation sensors are fixed rigidly on the spacecraft modules. Their alignment with celestial bodies selected provides the spacecraft orientation relative to these bodies. After that the spacecraft attitude is maintained.

AUTOMATIC ORBITAL ORIENTATION is performed using ionic sensor and infrared horizon sensor. When using the IR-sensor the spacecraft Y-axis (lateral axis) is directed towards the Earth centre. The ionic sensor aligns the spacecraft X-axis with the orbital plane. The spacecraft can be transferred from its orbital orientation to any specific position in reference to celestial reference points using programmed turns. To perform this procedure the gyros are uncaged at the desired moment and store the reference position for any specific turns. The Soyuz control system allows to perform programmed turns without using gyros of a gyro package. In this case angular-rate pickups and their integrating devices are used. The gyro package and angular-rate pickups allow to maintain the spacecraft attitude. To maintain the orientation

the spacecraft needs compensation of disturbing moments due to the effect of the atmosphere and the Earth gravitational field. The gyro package and angular-rate pickups illustrate functional redundancy when performing orientation of one definite type. The different approaches in solving similar problems increases the spacecraft control system reliability and its "survivability."

The spacecraft ONE-AXIS ORIENTATION towards the Earth is provided by the infrared horizon sensor, while its orientation along the motion direction is performed by use of ionic sensor. On generating a reaction pulse by the approach-correcting assembly the spacecraft will be stabilized and maintain its attitude unchanged. The spacecraft attitude stabilization is provided by the AMCS. The special device of this system measures the velocity increments and upon achieving a specific value shuts off the propulsion system. During the spacecraft sun-orientation the onboard-automatic device provides the spacecraft rotation and exposes solar batteries to the sun radiation. When the proper position is achieved, it can be maintained by means of two ways, namely by twist, during which the spacecraft maintains its attitude like a top, and by vibrations about the Sun direction. The cosmonaut may perform the spacecraft orientation of any type both in manual and automatic modes. During automatic modes, which are of great importance, the cosmonaut usually monitors the process using the display, sighting device or signalling system on the cosmonaut's panel. The right controller is used by the cosmonaut to ensure the spacecraft control through each of the three channels, setting the spacecraft rotational speed up to 3 degrees per second. In the precision mode the controller enables the cosmonaut to use some pulses of control jet engines which provide the spacecraft minimum rotational speed and fuel consumption.

AMCS OPERATION DURING RENDEZVOUS, APPROACH AND DOCKING Two revolutions prior to docking the Soyuz crew manually turns the spacecraft to perform its orbital orientation. During this orientation the spacecraft X-axis aligns with its velocity vector, while one of its Y-axis is directed towards the Earth centre. On accomplishing orbital orientation it is maintained automatically using the spacecraft AMCS. Upon detecting "Soyuz" with "Apollo" optical devices the spacecraft begin their approach. To facilitate Soyuz detection and identification during early approach at the orbital dark phase the Soyuz instrument-assembly module carries body-mounted flashing beacons. The flashes of the white light allow to detect the spacecraft at a distance of hundreds of kilometres (100 kilometres = 62 miles).

The onboard coloured orientation lights located on solar batteries are used to visually determine the spacecraft attitude. In case of need the crew may establish communication between the spacecraft by switching on and off the onboard lights, should the radio communication between the spacecraft not be established for some reason. The Soviet spacecraft docking target can be observed from Apollo at a distance of 200 meters (656 feet).

With the distance of a few dozen meters, the target allows to determine the spacecraft attitude and distance. The precise alignment using the target is performed at a distance of approximately 10 meters (33 feet).

During approach and docking the Soyuz spacecraft changes its orientation mode. After that it maintains its constant orientation relative to celestial bodies. To observe the docking target it is convenient to automatically maintain such inertial orientation, since the conditions of the target illumination do not change during the spacecraft approach. When in the vicinity of Apollo, the Soyuz turns about its X-axis and sets into position fit for docking. The orientation system stores and maintains this position. The DM contact sensors respond to the spacecraft contact and disable the Soyuz attitude and motion control system.

LIFE SUPPORT SYSTEMS, PURPOSE AND COMPOSITION

The main function of the Soyuz life support systems (LSS) is to supply life supporting conditions during the flight for the crew to perform transfers and joint activities with the Apollo crew. The LSS provide and maintain the required atmosphere, temperature and sanitary conditions. The LSS also provide the crew with food and water. Functionally the systems can be divided as follows: gas composition supply system; pressure suit set; thermal control system; food and water supply systems; furnishings and hygiene facilities.

For the Soyuz/Apollo flight the gas composition support system was modified to provide a possibility of establishing an atmosphere with pressure of 490-550 mm Hg. The high limit was taken close to maximum which excluded the necessity of performing desaturation; the low limit was taken to ensure safety (the oxygen volumetric contents not more than 40%). The Soyuz atmosphere high oxygen percentage and cosmonauts' staying in the Apollo oxygen atmosphere made necessary to perform additional fire safety certification of the most part of the Soyuz equipment and assemblies, and in some cases the materials used were replaced. The joint flight required that the thermal control system should also be developed: the provisions are made to protect the Soyuz structural elements from the Apollo engine plume heating during the docking, a heat-exchanger in the form of a bracket was developed for the Apollo transceiver installed in the Orbital Module.

GAS COMPOSITION SUPPORT SYSTEM Gas composition support system is designed to provide in the Soyuz (and in the docking module when transfer tunnel hatches are open) the required life supporting atmosphere composition and pressure, oxygen and carbon dioxide partial pressure and hazardous impurity contents required. The GCSS provides module pressure equalization and depressurization both during the spacecraft autonomous and joint flights, monitors module pressure integrity and atmosphere contents. If necessary, the GCSS provides gas leakage make-up and maintains the suit pressure required. In the first orbits the Soyuz pressure slightly exceeds the atmospheric pressure because of the module additional pressurization with oxygen performed at the launch site. The additional pressurization will provide the normal oxygen contents for the subsequent depressurization to 490-550 mm Hg. Following the completion of the joint activities with the Apollo crew the Soyuz pressure is increased to atmospheric as a result of the air pressurization from a specially-designed tank.

The removal of carbon dioxide and hazardous impurities excreted by the crewmen as well as the replenishment of the oxygen consumed during breathing are performed by the regeneration facilities installed in the descent vehicle and the Orbital Module. The operating principle is as follows: air is supplied to the regenerators by means of fans; in the regenerators containing potassium superoxide the air is purified and enriched with oxygen, when the regenerator is inoperative or the CO_2 concentration increases up to the high level, the air is supplied to the CO_2 absorber.

The DV regenerator is used only at the phase of insertion and during the autonomous flight. The DV regenerator is controlled by the crewmen from the DV panel. The OM regenerator operation is performed automatically in response to commands of the gas analyzer. The regenerator control can also be performed from the DV and OM panels.

The monitoring of the atmosphere composition maintained by the regeneration facilities is performed by two gas analyzers installed in the Descent Vehicle and the Orbital Module. When O_2 and CO_2 contents exceed allowable values, the DV gas analyzer produces warning signals.

A pressure-and-vacuum gauge and a pressure integrity check unit, producing signals when leakage is more than 70-90 mm Hg/hr, are installed in the OM to verify the habitable module, transfer tunnel and interface integrity. Should leakage occur, it may be compensated from the air storage tank designed for module pressurization during a period of time required for the crew to don their pressure suits. Oxygen-nitrogen mixture (40% oxygen) can be supplied to the pressure suit both manually and automatically for a period of time required for the spacecraft descent and landing. A pressure control unit is available onboard the spacecraft to maintain the module pressure within the specified limits.

PRESSURE SUIT SET The set comprises two pressure suits, four ventilation systems, two inflight bags, pressurized collar, two sets of flight garment and two headsets. The pressure suit is a soft pressure shell with a built-in soft helmet. The helmet is rigidly fixed with an opening window. The pressure suit is provided with removable gloves. The crewmen have their pressure suits on during the Soyuz orbit insertion, docking and undocking with Apollo, and descent. During the other flight phases the pressure suits are stowed in the bags in the Orbital Module. During the suited operation the necessary life supporting conditions are established by ventilating the pressure suits with cabin air using ventilation facilities installed in the DV. Each pressure suit is ventilated separately by its ventilation system. Should one of the DV ventilation systems fail, another ventilation system provides ventilating of both pressure suits. If necessary, pressure suits can be ventilated with gas mixture supplied by the spacecraft onboard system.

The activation of the gas mixture supply system as well as deactivation of pressure suit ventilation systems are automatic. These operations can be performed manually as well. The pressure suit donning and doffing are performed in the Orbital Module; during donning and doffing the pressure suits are ventilated with cabin air by means of the ventilation systems installed in the OM. These ventilation systems are used for the suit drying. Pressure suit drying involves two phasess: two pressure suits are being dried simultaneously, then each pair of gloves is being dried. One pair of gloves is connected to a ventilation system using a special device which is stowed in a kit with tools. After drying the pressure suits are stowed in the in-flight bags. After the spacecraft landing the crewmen egress the DV with their pressure suits on. In case of the DV splashdown or emergency escape a cosmonaut without doffing a pressure suit will don a pressurized collar and leave the DV.

THERMAL CONTROL SYSTEM The Soyuz Thermal Control System provides the following: habitable module temperature within the range of 15-25° C, habitable module relative humidity within the range of 20-70%; instrument bay temperature within the range of 0-40° C; set temperature of equipment and different components of the design including APDS components and Apollo radio set installed in the Soyuz spacecraft; module atmosphere ventilation.

During the orbital flight the spacecraft structural elements are heated from external and internal heat sources: the Sun, Earth, equipment and crewmen. During the spacecraft joint flight the Soyuz is additionally affected by the Apollo attitude-control engine plume heating rates and heat transfer through the Docking Assembly. The heat generated by the spacecraft external surface is absorbed by space with temperature close to absolute zero. The Soyuz Thermal Control System is designed to minimize the spacecraft unregulated heat transfer through its external surface to space environment, on one hand, and, on the other hand, to take excessive heat from the spacecraft internal heat sources and dissipate it in space environment. The Thermal Control System comprises thermal insulation and hydraulic system. The shield-vacuum thermal insulation is placed on the spacecraft external surface and allows to minimize heat exchange between the spacecraft and space.

THE HYDRAULIC SYSTEM

The circulating fluid accumulates the heat from internal sources and dissipates it in space. The hydraulic system comprises units for heat collection, moisture collection, hydraulic system control, heat rejection and air ventilation within the modules.

The hydraulic system operates as follows:

The heat generated by the equipment and crewmen is transferred to the air circulating within the modules. Air circulation within the modules is performed by fans. The heated air is supplied to the habitable module heat exchanger-condensers and instrument bay gas-to-liquid heat exchanger where it is cooled by the hydraulic system liquid. The liquid temperature within the hydraulic system is maintained by regulator changing flow rate of the liquid going to the radiator to be cooled. The habitable module air temperature required is maintained automatically by changing flow rate of air supplied to heat exchangers to be cooled. When the air is being cooled in the habitable module heat exchangers the air water vapors condensate on heat exchanging surfaces. The moisture condensated is pumped out by a pump into the moisture collector.

In addition to air cooling, the cooling is performed by the hydraulic system liquid passing through the channels of the structural elements (for example, cooling of the Apollo radioset mounting bracket). The hydraulic system consists of two hydraulic circuits: habitable module circuit and instrument bay circuit which is connected to the radiator-emitter. The circuits are connected by liquid-to-liquid heat exchanger. The excessive heat of the habitable module circuit is transferred in the heat exchanger to the instrument bay circuit with lower temperature and the excessive heat of the instrument bay circuit is dissipated as a result of radiator-emitter surface radiating to space environment. The circuit liquid circulation is performed by pumps.

Throughout the Soyuz flight the Thermal Control System is operating automatically. The only operation performed manually is a regular condensate pumping out from DV and OM heat exchangers. The docking system thermal mode is provided by the shield-vacuum and fiber thermal insulation of DS surface as well as by the covers with certain optical characteristics (placed on uninsulated surfaces).

FOOD SUPPLY SYSTEM

A cosmonaut's daily food-ration comprises various natural food products packed into aluminum tubes and tin cans. The food ration also involves a wide variety of bread packed in cellophane (Borodinskiy, Rizhskiy, Stolovy, Honey cake) and as a dessert candied peels, refractory chocolate, sweets, ship's biscuits, etc.

All these products are very nourishing. Food nourishment value of daily ration per capita is 2700-3000 calories that fully covers daily energy losses of the organism. During the flight the crewmen take food four times every 24 hours.

The menu is made up to every crewmen's taste (three different menus, each repeated every fourth day). The following is the menu of the third day:

I. BREAKFAST: Meaty paste, Borodinskiy bread, sweets Praline, coffee with milk.

II. LUNCH: Cottage cheese cream with black currant puree, a honey cake.

III. DINNER: "Kharcho" soup, chicken meat, Stolovy bread, prunes with nuts.

IV. SUPPER: Meaty puree, Stolovy bread, Rossiyskiy cheese.

The overall nourishment value of the third day ration is 2843 calories with protein contents - 126 g, oil contents - 130, 5 g, carbohydrate contents - 271, 1 g, water contents - 670, 5 g.

It should be noted that the menu of the third day (dinner) comprises cottage cheese cream with black currant puree. It is very tasty food product made of a high-quality cottage cheese. It is mild and has a faint taste of black current jam. Its nourishment value is 413 calories.

Prunes with nuts are also very tasty. The combination of prunes and nuts is not so dry and more tasty.

The first courses, some meat products (bird puree, meaty puree), coffee with milk are less tasty when cold than when warmed up. Taking this fact into consideration a heater is provided aboard the spacecraft. The heater allows to warm up tubes with food stuff.

Three sets of dinner are provided aboard the Soyuz spacecraft for the U.S. astronauts. The dinner comprises first courses, canned meat, bread, prunes with nuts, sweets. The daily ration food stuff is enclosed in individual packages labelled in Russian and English to indicate the date of food taking.

Aboard the Soyuz spacecraft is a folding table on which the cosmonauts and astronauts using hold-down facilities may place their food stuff to have a meal.

WATER SUPPLY SYSTEM

The function of the Water Supply System is to store and supply potable water. The potable water is stored in a storage tank installed in the Orbital Module. The ball-shaped storage tank has two cavities: one for water, the other for air. There is a diaphragm to separate the water and air cavities. When the water cavity is being charged with water the diaphragm is bent thus expelling all the air from the air cavity of the ball-shaped tank. Water expelling is performed by the diaphragm at an excessive pressure in air cavity. The excessive pressure (compared with the environment pressure) is created by the hand pump.

The accepted daily value of water consumption per capita is 1.7 liters.

The difference between the tank potable water and ordinary potable water is that the first contains silver ions permitting storage of water in the tank for a few months; and throughout the storage period the tank water doesn't acquire an unpleasant odor, taste and remains transparent. The receiving device is designed to receive water from the storage tank. It has a valve and a socket to install an individual mouth-piece. Individual mouth-pieces are provided in the OM for the cosmonauts and visiting astronauts.

For ease of water consumption three "space glasses" are provided in the Descent Vehicle. The body of the glass is like a bellows: it is folding up as water is being consumed. In the upper part of each glass there is a button-type by-pass valve to open the water cavity, and a receiving tube to consume water. When a glass is empty, it can be refilled with water from the tank.

CLOTHES

The Soyuz cosmonauts' suits are made of thermal resistant fabric specially manufactured for ASTP mission. The suit of sports style (a jacket and trousers) will not restrict movements and will ensure convenience in work. The pockets of the suits are large enough to hold all necessary things (note-books, pencils).

If required, the cosmonauts may put on a wool cardigan under the jacket. The constant wear garment (a part of the inflight clothing) is made of cotton-flax knitted linen with good physiological and hygienic properties: hygroscopicity, air permeability, steam permeability, water absorption. The cosmonauts' light leather boots are protected by covers made of linen Lola. The inflight clothing as a whole ensures comfort for the cosmonauts to stay in the Soyuz and Apollo spacecraft.

PERSONAL HYGIENE FACILITIES

The personal hygiene facilities comprise damp and dry napkins and towels, combs, hair brushes and nail-files. Damp and dry napkins are made of gauze, they are convenient for use and have a pleasant smell of jasmine. Damp napkins are damped with lotion. Damp and dry napkins are used for face, hands and mouth cavity hygiene. Damp and dry napkins are provided for sponging a body. Towels are made of linen. For every day's toilet the cosmonauts use an electric razor equipped with a specific hair collector. Each cosmonaut has an individual toilet seat.

WASTE MANAGEMENT SYSTEM

The Waste Management System is placed in the Orbital Module. The operating principle is based on transferring liquid wastes (urine) by air flow to a collector where the particles are divided into liquid and gaseous phases. Solid wastes (feces) are collected and stored in pressure-tight volumes. The system prevents solid and liquid waste unpleasant odors and impurities to penetrate into the atmosphere of the spacecraft.

RADIO/ELECTRONIC EQUIPMENT

The Soyuz spacecraft radio/electronic equipment includes radio/telephone communication system, TV-system, cable communication equipment, command radio communication line, telemetry system and orbit parameter measurement system.

The spacecraft radio/electronic equipment together with the ground radio equipment (the ground station and MCC equipment) provide voice communication with the Soyuz/Apollo crews, observation of the crew activities via TV-communication lines, TV-transmissions from space, the spacecraft systems remote control from the ground, the spacecraft system/assembly operation monitoring and determination of the spacecraft trajectory.

RADIO/TELEPHONE COMMUNICATION SYSTEM

The Soyuz voice communication system provides HF/VHF communication with the ground and also with the Apollo. VHF range is used for communication with the spacecraft in sight of the VHF ground stations. HF range utilization provides air/ground communication with the spacecraft out of the ground station's sight. A compatible voice communication system which operates in VHF range at two American frequencies and at one Soviet frequency was developed for the joint flight. This system provides the Soyuz/Apollo communication during rendezvous phase and after docking, and also that with the USA ground stations when the two spacecraft are in these stations AOS (acquisition of signal). Similar equipment in the Apollo spacecraft provides Apollo communication with the Soyuz crew and the USSR ground stations when the two spacecraft are in the USSR stations AOS.

Joint examination of the rendezvous system compatibility problem concluded that it is impossible to develop in a short time an international radio system which provides the spacecraft relative attitude and motion parameters determination. Therefore it was proposed that the voice communication system be used to measure range between the spacecraft. For this purpose the Soyuz was equipped with the USA VHF transceiver to provide voice communication and serve as a transponder or provide reception, conversion (to increase noiseproof feature) and retransmission of "measurement signals" radiated by the Apollo VHF system. Range between the spacecraft is measured by comparing phases of "measurement signals" radiated by Apollo and of those retransmitted by Soyuz. Range is measured automatically without interrupting spacecraft-to-spacecraft voice communication.

The voice communication system includes two transceivers supplied by the USA and the USSR and operating at American and Soviet frequencies respectively to provide spacecraft-to-spacecraft communication; VHF/HF transceivers for communication with the ground; speaker box and audio signal amplifiers; microphones, dynamics, headsets; and antennas. Radio communication system control is accomplished through the cosmonaut control panel.

Volume controls for signals received via voice communication are also built in this control panel. There are three individual volume controls at each cosmonaut station to control volume of signals of the air/ground, Soyuz/Apollo and internal communication lines.

The selected transmitters are switched on via PTT (push-to-talk) built in the cosmonaut seat arms and the control panels or mounted on cables attached to headsets. The Soyuz spacecraft is equipped with two sets of antennas for spacecraft-to-spacecraft communication. The antennas are mounted on the orbital module. Omnidirectional radiation pattern is practically provided by these antennas which is very important for the spacecraft arbitrarily positioned in space relative to each other.

TV SYSTEM

A four-camera TV system is used in the Soyuz spacecraft. Three cameras are installed inside the spacecraft: one in the descent vehicle and two in the orbital module. One camera, mounted outside, looks at the docking system. Two of the internal cameras provide color transmission. After docking a color TV camera can be transferred from Soyuz and connected to the Soyuz cable system in Apollo.

The TV cameras are switched on from the Soyuz. Both cosmonauts and astronauts will be participating in the TV reporting. During reporting, pictures will be simultaneously transmitted to a Soyuz onboard TV screen and to the ground. Besides transmission of TV scenes, the TV equipment provides monitoring of the Soyuz system parameters. The equipment control is accomplished by commands from the ground or directly from the spacecraft.

CABLE COMMUNICATION SYSTEM

Following the spacecraft docking, the docking system electrical connectors, which provide spacecraft-to-spacecraft voice and and TV cable communications, are manually mated. The cable communication system equipment including J-boxes to connect headsets and TV cameras were specially designed for this test project.

COMMAND RADIO SYSTEM

Command radio system provides uplink transmission from

the USSR ground control stations to the Soyuz of commands to remotely control the spacecraft systems. After being received by the Soyuz onboard receiver a command switches on or off various onboard systems or changes the system's mode of operation. Commands which have to go into effect when the spacecraft is out of the USSR ground control station AOS shall be delivered to a special memory device where they are stored until the appointed time and then delivered to the spacecraft automatic controls.

The command radio communication line provides downlink transmission of signals which confirm reception and execution of commands transmitted to the spacecraft and also verification of the board and ground time.

ONBOARD TELEMETRY SYSTEM

Onboard telemetry system provides the spacecraft system operation remote monitoring on the ground. Onboard system operation parameters are automatically measured, coded and transmitted to the ground. Information received on the ground is automatically decoded and processed so that the flight managers and specialists can at any time have on request any information on the measured parameters they are interested in.

Real time transmission of telemetry data is accomplished when Soyuz is within the USSR measuring station AOS. When the Soyuz is out of the USSR measuring station AOS, telemetry information is stored in special memories.

ORBIT PARAMETERS MEASUREMENT SYSTEM

The Soyuz onboard radio system in conjunction with the ground measurement facilities provides accurate measurement of the spacecraft orbit parameters.

BASIC DATA ON THE SOYUZ SPACECRAFT LAUNCH VEHICLE

The Soyuz spacecraft launch vehicle has 3 stages.

I **Stage** consists of 4 side units, each of which is 19 m long, about 3 m in diameter and equipped with the four-chamber engine and two steering chambers having a total vacuum thrust of 102 tons (224,871 pounds).

II **Stage** is a central unit of about 28 meters, with maximum diameter of 2.95 meters, equipped with the four-chamber engine and four steering chambers having a total vacuum thrust of 96 tons (211,643 pounds).

III **Stage** is a unit of 8 meters in length with a diameter of 2.6 meters, equipped with four-chamber engine (with steering nozzles), generating a vacuum thrust of 30 tons (66,138 pounds). Launch weight of the launch vehicle (with the Soyuz spacecraft) is 300 tons (661,386 pounds).

At launch the engines of the I and II stages are ignited simultaneously. The operation of the second stage continues following the jettisoning of the four side units. The third stage is operative following the cut-off of the second stage engines. Oxygen-kerosene propellant is used for all stages of the launch vehicle. The full length of the launch vehicle (with the Soyuz spacecraft) is 49 meters (160.8 feet). Maximum diameter is 10.3 m (stabilizers) or 33.79 feet.

BIOMEDICAL REQUIREMENTS

The spaceflight biomedical requirements imply all means and measures used at the various stages of design, preparation and flight implementation to prevent illness or functional disturbances which may hinder realization of the flight program.

On designing the Soyuz spacecraft for the joint mission with Apollo the first biomedical problem solved was the choice of gas atmosphere to exclude human decompression disturbance during cosmonauts' transfer from the Soviet spacecraft to the USA spacecraft.

Much attention was paid to the cosmonauts' rational work/rest regime to maintain a high level work capacity. During the period of crew activities time is allowed for rest, eat period, hygienics procedures, active rest period. These procedures alternate with work periods to avoid overstrain and to schedule the most responsible actions for periods of the maximum work capacity.

For the purpose of disease prevention provision is made for the Soyuz and Apollo crew members' partial isolation before the flight. The fact of the matter is that for some preset time period the crewmen of both sides will have primary contacts with a limited number of persons. In view of the flight short duration the main procedures and the crews' joint activity will be performed under conditions of severe weightlessness adaptation.

As is generally known, during the first days of human being under weightlessness conditions some disagreeable feeling (specifically, with abrupt motion) and objective changes may occur which usually disappear on the fifth or seventh day of the flight. That is why the crewmen will be under regular surveillance of the ground medical personnel and all their activities should be planned with regard to medical requirements.

For the purpose of medical monitoring the crewmen reports on their state will be used along with registration of physiological parameters (electrocardiogram, respiratory rate) and spacecraft environment inflight characteristics. Concurrent with medical monitoring dose monitoring will be conducted to determine the level of radiation effect. Radiation safety service will also predict radiation levels in the spacecraft inhabited modules and in the mission trajectory and forecast solar activity (flares).

One more specific feature of Soyuz/Apollo experimental joint flight is that five cosmonauts and astronauts will be in space at a time. This will provide a great quantity of preflight and postflight data on human state during space flight. Due to the spacecrafts' different flight duration it will be possible to reveal characteristic features of organism weightlessness adaptation using flight data of medical observation and human postflight response assessment.

For this purpose it is necessary to simultaneously carry out each crew's pre- and postflight basic examination using similar or identical methods of investigation and functional test, conducted according to unified procedures.

In so doing crewmen state of health is evaluated and potential latent diseases or functional anomalies are revealed which require remedial or preventive intervention.

Preflight and postflight medical data together with preflight examination allow to evaluate general human response to space factors and to study readaptation behaviour under conditions of terrestrial gravity force with the process of weightlessness adaptation not accomplished. Preflight and postflight examination program for the crews comprises the following procedures: medical examination, individual drug response testing, clinical and laboratory investigation, biochemical investigation, cardiovascular system observation when in rest and during functional test, vestibular and immunologic examination. Both Soviet and American specialists have agreed upon procedures and time schedule for the Soyuz and Apollo crewmen primary pre- and postflight examination.

The crews' preflight examination is to be conducted 30, 15 and 7-10 days prior to the flight according to the full program, while just before the flight only partial medical examination will take place. The postflight examination will be carried out mainly on the day the mission is accomplished, then on the first and third day after the flight. Should some abnormalities be revealed, this examination will be periodically repeated.

FLIGHT CONTROL

CONTROL CRITERIA During the joint flight preparation the two sides agreed that the USSR mission control center (MCC-M) should control the Soyuz flight and the U.S. mission control center (MCC-H) should control the Apollo flight, and that sufficient number of communications lines be provided between the MCC-H and MCC-M to coordinate joint activities of the centers. Maximum flight safety is the main criterion of the joint flight control. Also, a number of organization criteria as a base of joint flight control implementation were developed.

Each MCC controls joint flight in accordance with mutually developed and agreed to documentation, and effective crew joint activity coordination is provided. The Flight Directors control the joint flight and coordinate MCC activities. Correctness of decisions made in the course of flight control is the Flight Director responsibility. Each country appoints a team of specialists to work at the other country's MCC and to provide the required consultations for that country's Flight Director.

RESPONSIBILITY ASSIGNMENT Responsibility assignment in nominal and contingency situation was agreed upon. The Soyuz flight control is the USSR MCC responsibility. The Apollo flight control is the U.S. MCC responsibility.

In accordance with the main flight control criterion, in case of a contingency in either spacecraft, the MCC which learns of the contingency first should immediately inform the other MCC and take actions to ensure the crew safety. If either crew finds out a contingency and no communications line to either MCC is available, the spacecraft commanders agree upon their action and come to a decision to proceed with the mission program.

INFORMATION EXCHANGE Information exchange between the two MCCs is accomplished via the following communications lines: voice, TV, teletype and facsimile. Command/program, trajectory, telemetry and TV information is exchanged between the MCCs during the flight. Transmission of schematics, facsimile and other graphic data is provided.

If need be, either MCC can communicate with its spacecraft flying over the other side ground station after the communication is agreed upon with the other side. Voice link can be provided either by remote keying from the MCC or through a designated specialist in the other MCC after permission is granted. Also, the two sides agreed to exchange air/ground voice communication records.

MISSION CONTROL CENTER

Mission Control Center functions to control manned spacecraft and automatic vehicles of "Moon," "Venus" and "Mars" type. Also, the flight control is supported by the USSR ground stations such as Djusali, Evpatoria, Ussuriysk, Ulhan-Ude, Kolpashevo, Tbilisi, Petropavlovsk-Kamchatskiy and research ships of the USSR Academy of Sciences in the Atlantic Ocean water areas and computation centers of the USSR Academy of Sciences.

The MCC responsibilities during the flight are as follows:

- collect, process and analyze the information (telemetry, trajectory and TV) arriving from the ground stations and research ships through ground and satellite communication links;
- update, change, if required, the flight program and implement this program;
- practically direct the activities of the ground tracking stations and scientific research ships of the Academy of Science;
- communicate with the computation center to provide the measurement data processing reliability;
- interact with the mockup and simulator setups and consoles;
- interact with the search-and-rescue complex.

The mission control center personnel includes:

- managers and cognizant specialists (whose stations are in the control room;
- USA consultative team (a room near the control room);
- support teams (whose stations are in the MCC building and who provide the control room with all the necessary information and preliminary proposals to control the flight).

The mission control center involves a computer complex; TV equipment that provides reception and indication of TV information transmitted from the USSR space launch area and the spacecraft, and also, indication of telemetry data and support team information on individual display facilities; voice communication equipment that provides the MCC personnel with all the necessary internal and external communication links; display facilities for individual and collective use to display all the necessary information to control the flight. Communication lines between the MCC and the Moscow TV centers are provided.

CONTROL ROOM The flight control is accomplished in the control room. The personnel activities in the control room are directed by the Shift Flight Director. The following people man their stations in the control room: Shift Flight Director; cognizant specialists responsible for the primary spacecraft systems; cognizant specialist responsible for ground tracking station network normal functioning; cognizant specialist responsible for flight program time line working out; cognizant specialist responsible for complex analysis of onboard system operation; operator-cosmonaut who performs voice communication events with the crew; Project Technical

Director representative; trajectory specialist; cognizant specialist responsible for scientific experiments; medical officer responsible for the crew-medical examination; MCC Shift Director and cognizant specialists responsible for the MCC primary systems (communications, information/computer complex, information display systems, etc.).

All the specialists' stations are equipped with standard panels, data display facilities for collective and individual use, and communication facilities for the specialists to directly communicate with each other, Shift Director and support team outside the control room. The personnel works in three 12-hour shifts with about an hour overlap for taking over procedure. During the flight the take over procedure is performed without causing any delay in flight procedures.

CONTROL ROOM FUNCTIONS DURING THE FLIGHT The mission control center takes over the spacecraft control from the launching complex immediately after the spacecraft separation from the launch vehicle third stage. Up to this time the control room personnel monitor onboard system operation via telemetry channels and observe the crew activities by TV communication link and listen to the crew/launch control team voice exchange. The central screen displays launch vehicle progress throughout the period of orbit insertion.

Following the spacecraft separation from the launch vehicle, the control room personnel monitor, via telemetry channels, the spacecraft antenna and solar battery deployment, establish communications lines to the spacecraft and start the onboard system operation checkout.

When the spacecraft reaches the ground station AOS (acquisition of signal) the spacecraft progress is displayed on the central screen, transmission of command to the spacecraft is started in accordance with the flight program. The personnel in the control room monitor the command transmission and reception onboard the spacecraft. The appropriate onboard systems are switched on. The ground stations start reception and retransmission to the MCC of all the telemetry and trajectory information and also TV retransmission from the spacecraft. The telemetry and trajectory information is automatically processed by the MCC computers and displayed in the control room at the rate it is being received.

Cognizant system specialists thoroughly analyze the telemetry information, assess each onboard system status and operation, and present the assessment results to the cognizant specialist responsible for the system complex analysis. Cognizant system specialists can communicate with the support team whose stations are outside the control room, and consult the latter, if required, or get additional information on the onboard system operation.

In case of deviations from the normal modes of onboard system operation, the complex analysis specialist analyzes the effect of the failure on each system, prepares his proposals to eliminate the failures and correct the scheduled modes of onboard system operation, and informs the Shift Flight Director of these proposals.

The medical officer responsible for the crew medical examination thoroughly analyzes the biotelemetric data, evaluates the crew physical condition and informs the Shift Flight Director of the results.

As trajectory information is processed and orbit parameters determined by the computers, the trajectory data are automatically displayed on the alphanumeric board in the control room. The trajectory specialist in the control room can communicate with the trajectory support team.

In flight, the operator-cosmonaut performs voice exchange with the crew. The specialist reponsible for the ground station network monitors the station operation, informs the Shift Flight Director if deviations from the scheduled program are observed, and takes appropriate action to eliminate the deviations. He can directly communicate with the ground station personnel.

The Shift MCC Director monitors the MCC support teams activities and also informs the Shift Flight Director of any deviation, and takes appropriate action to eliminate the deviations. The Shift Flight Director summarizes all the information and comes to a decision with regard to the progress of the flight. If no deviations in the ground and onboard systems operation were observed, permission is released to proceed with the nominal program.

If program correction is required, this is accomplished by the specialist responsible for the program time-line. Corrective actions can be taken during both the current and the subsequent events. The spacecraft model and the cosmonaut complex simulator can be utilized, if required, for failure identification and corrective action verification. The worked out decisions are implemented by MCC transmitting radio commands to onboard systems and radio message to the crew.

During Apollo/Soyuz joint flight a consultative team of U.S. specialists will support the flight from the USSR mission control center by providing consultations for the USSR Flight Director on technical questions pertinent to the U.S. spacecraft and communication with the Apollo crew in the USSR ground station AOS, if required.

The consultative team is stationed in a special room (near the control room) equipped with standard panels and facilities, and provided with all the necessary data pertinent to the Soyuz spacecraft. The U.S. specialists in the MCC-M can communicate with the MCC-H at any time through voice and teletype channels or transmit/receive the necessary data by facsimile.

THE CONTROL ROOM SUPPORT TEAMS Besides the specialists in the control room there are support teams in the MCC. The specialists who support the control room activities work in separate rooms equipped with standard panels similar to those in the control room. The support teams provide information and computation data for the personnel in the control room to use it as a base in making decisions with regard to the flight program; consult the specialists in the control room and help them in analyzing the onboard system operation; provide implementation of decisions made by the Shift Flight Director; and control the MCC facilities operation.

The support teams include:

SPACECRAFT ONBOARD SYSTEM SPECIALISTS

- prepare and provide display of all the necessary additional information about onboard systems for specialists in the control room;
- consult the control room specialists and assist them in onboard system operation analysis;
- provide failure identification on the spacecraft model, if required;
- systematize the telemetry data processing results
- change telemetry data processing computer program, if required.

SPECIALISTS RESPONSIBLE FOR FLIGHT PROGRAM PLANNING

- prepare changes in the flight program, if required, based on onboard system operation analysis results and the Shift Flight Director decisions;
- work out commands transmission plan for onboard systems and radio messages for the crew;
- provide and display the necessary information for the specialist in the control room responsible for the flight program working out.

TRAJECTORY SPECIALISTS

- provide the necessary trajectory computation data in orbit determination, scientific experiments, AOS, the spacecraft coming into and going out of the shadow and the spacecraft maneuvers, and the data display.

AIR/GROUND COMMUNICATION SPECIALISTS

- provide the MCC/spacecraft continuous communications via ground stations;
- provide voice channel keying from one ground station to another as the spacecraft passes over them;
- provide record of voice exchange with the crew;
- provide ground/air voice communication line for the US consultative team, if required.

GROUND STATION NETWORK OPERATION COORDINATION SPECIALISTS

- provide information on the ground station operation for the specialist responsible for command/measurement complex in the control room;
- coordinate the ground station operation in accordance with the program;
- insert changes into the ground station operation program, if required;
- send commands to onboard systems through ground stations.

MCC-M/MCC-H COMMUNICATION SPECIALISTS

- provide all center-to-center communication lines proper functioning, and the required communication lines keying according to the established line of priority, if any channels fail.

SEARCH AND RESCUE FACILITIES REPRESENTATIVES

- communicate with SRF management;
- provide information on search status for Flight Director and display facilities.

The control room support teams work in two 13-hour shifts. The total number of the flight control people is 100.

MCC INSTRUMENTATION/COMPUTER COMPLEX

The instrumentation/computer complex includes the following:

COMPUTER COMPLEX processes all numerical information in accordance with control tasks.

Primary, auxiliary, and special computers function in real time. The usual procedure is to use two primary computers for current center problems, the other two standing by. Each of the primary computers can provide processing of all of the TLM and trajectory data.

Processing results are routed to facilities of individual and collective use and to those of control. Only one of the computers is operative at a time; in case it fails the other computer takes over.

TV EQUIPMENT provides several TV channels between the MCC and the country communication centers. In the MCC TV information is routed to the display facilities and video tape recorders. Recorded TV information can be fed into the display facilities. Flows of TLM information are routed from the control and distribution equipment output to the computer complex through the monitoring and conversion equipment.

VOICE COMMUNICATION EQUIPMENT provides the MCC with hundreds of voice and TLG communication lines to support the flight control. Some of the voice communication lines provide numerical data exchange between the MCC and ground stations, launch pad, simulation facilities, backup control centers and other users.

Other voice communication lines provide efficient command communication between the MCC personnel and the crews, ground stations and other facilities supporting flight control.

Voice communication lines connect the MCC-H and the MCC-M (eleven voice communication lines, two of these having both voice and facsimile capabilities; two teletype communication lines and two TV channels).

PRIMARY DISPLAY FACILITIES for individual use are the personnel station monitors of 625 and 1125 standard. Monitors of two types are used to display ordinary TV pictures (625 lines) and documents requiring better image sharpness and higher resolution (1125 lines).

Display facilities in the control room include:

- Alphanumeric display of trajectory information processing results, most important information on the flight plan and this plan progress, reference data, information from the timing system; the alphanumeric display is controlled by the computer complex with capability of manual data input;
- Optical projectors to display in large scale screens maps the spacecraft trajectories and positions, ground station locations and AOS, the vehicle prelaunch preparation program and that of injecting the vehicle into a satellite orbit in form of graphs and tables;
- large-scale TV projectors to display live transmission from the launch site and spacecraft, the spacecraft status and crew-condition analysis results, most important reference data on the flight program.

Also installed in the MCC are:

- Uplink command transmission remote system with capability of transmitting commands through ground stations;
- Display facilities of individual use (displays) which provide efficient interaction of the specialists and the computer complex;
- Teletype-writers to exchange data with the ground stations and other organizations.

MCC PERSONNEL TRAINING

The MCC personnel performs training sequence during the spacecraft flight preparation. In the training use is made of simulators, the spacecraft physical/mathematical model, equipment of the ground stations, the USSR computer center and scientific research stations. Participating in the training are the spacecraft crews and the ground station personnel.

During the training the flight program is practised in real time and also the MCC interaction with the ground stations and the computer centers of the USSR Academy of Science. Potential contingencies onboard the spacecraft and at the ground support facilities are considered during the training as well as efficient ways out of these contingencies - with the crew safety provided.

During preparation for the joint Apollo/Soyuz flight it is necessary for the MCC personnel, the Soyuz crews, the mock-up and simulator complex and the ground support complex to perform additional joint training sequence. Objectives of these additional trainings are as follows:

- familiarization of the USSR and U.S. specialists with the USSR and U.S. MCCs and each MCC's peculiar features;
- examination by the USSR and U.S. specialists of the Soyuz and Apollo systems and their functioning during the joint flight;
- all the communications lines functioning checkout, the MCC-M/MCC-H information exchange procedure checkout;
- the MCCs operation cyclogram training;
- training in finding ways out of potential contingencies introduced by the flight trainers with the crew safety provided.

The training is performed under conditions very close to those of real flight.

SOVIET PRESS KIT ILLUSTRATIONS:

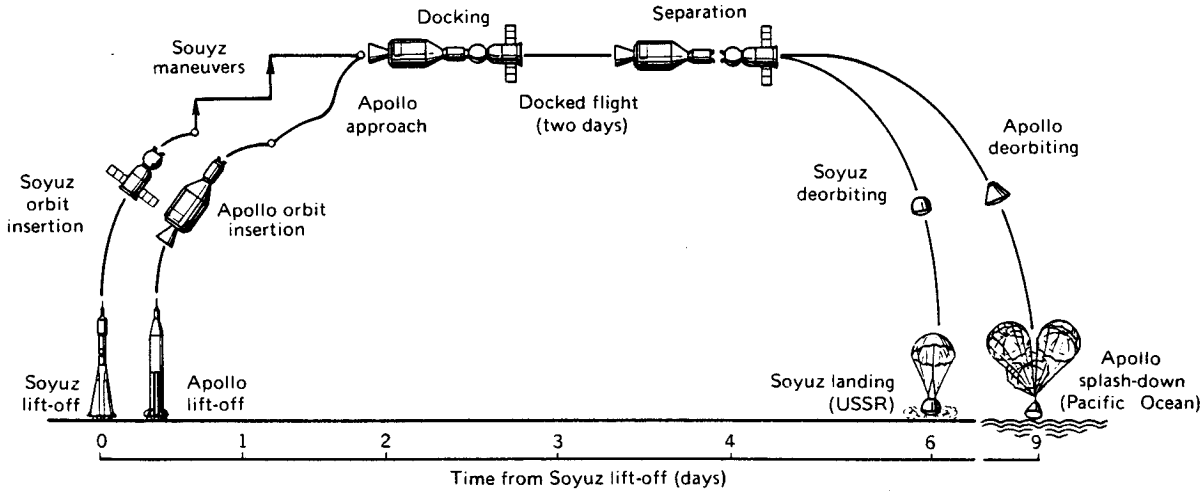

FLIGHT TRAJECTORY

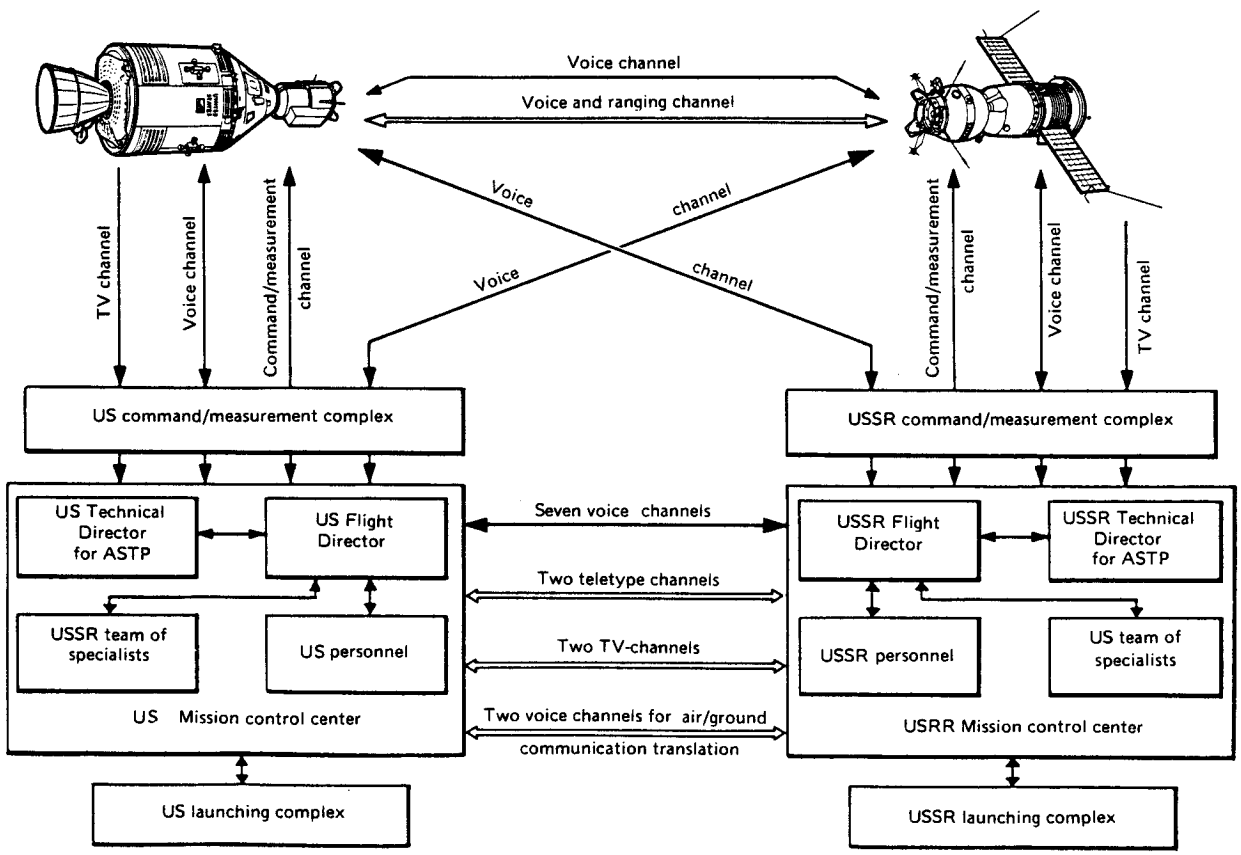

APOLLO/SOYUZ JOINT FLIGHT CONTROL SCHEMATIC

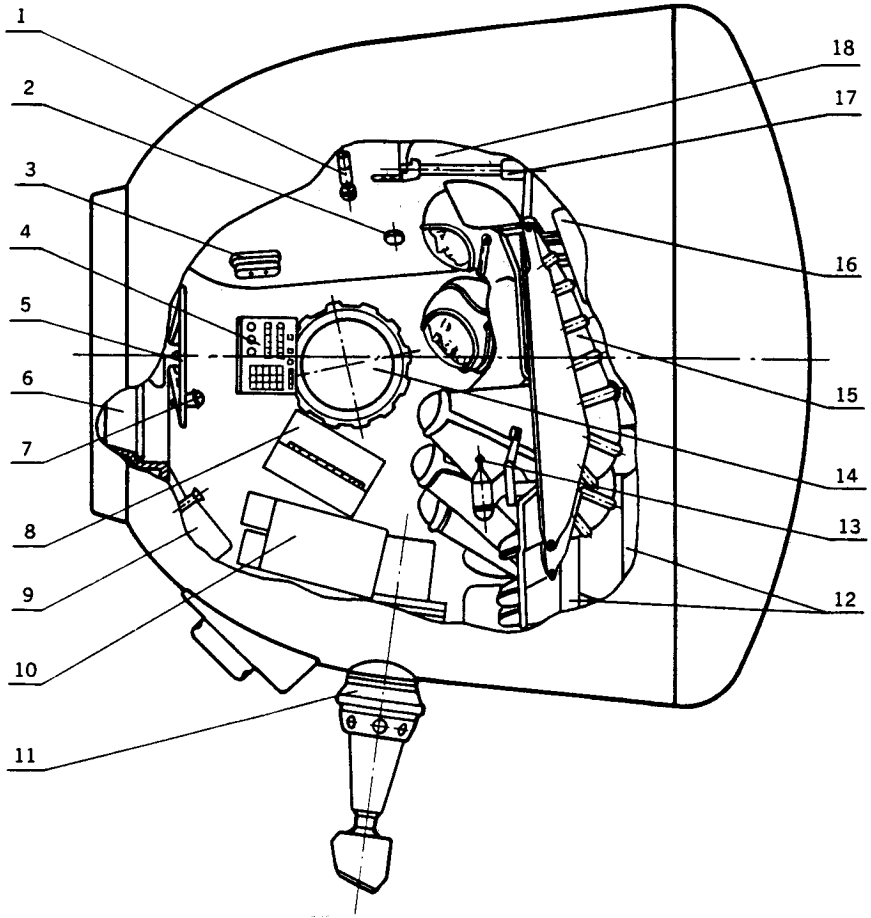

DESCENT VEHICLE:

1. PORTABLE LIGHT WITH AUTONOMOUS POWER SUPPLY
2. LOUDSPEAKER
3. WORKING LIGHT
4. VHF RADIO-STATIONS CONTROL PANEL
5. HATCH WHEEL
6. HATCH COVER
7. SPECIAL ILLUMINATION LAMP
8. COMMAND-SIGNAL DEVICE
9. TV CAMERA
10. INSTRUMENT PANEL
11. SIGHTING DEVICE
12. EQUIPMENT
13. CONTROL HANDLES
14. WINDOW
15. COSMONAUT COUCH
16. EQUIPMENT
17. COUCH LEG
18. PARACHUTE CONTAINER

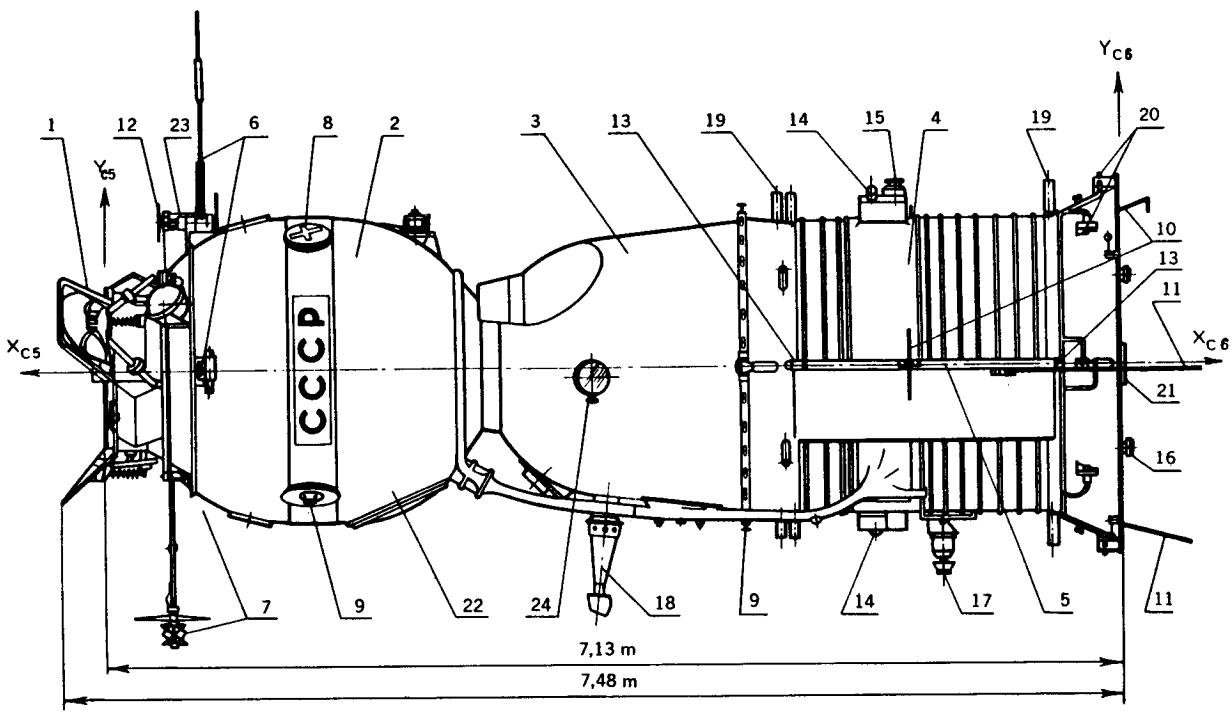

GENERAL VIEW OF THE SOUYZ SPACECRAFT (SIDE VIEW)

GENERAL VIEW OF SOYUZ:

1. ANDROGYNOUS PERIPHERAL DOCKING SYSTEM
2. ORBITAL MODULE
3. DESCENT VEHICLE
4. INSTRUMENT ASSEMBLY MODULE
5. SOLAR PANELS
6. VHF RADIO ANTENNAS
7. APOLLO VHF ANTENNAS (259.7 & 296.8 Mhz)
8. RADIO AND TV ANTENNAS
9. ANTENNAS OF THE COMMAND RADIO LINK AND TRAJECTORY MEASUREMENTS
10. RADIO TELEMETRY SYSTEM ANTENNAS
11. ANTENNA USED TO COMMUNICATE WITH THE EARTH
12. DOCKING TARGET
13. ONBOARD ORIENTATION LIGHTS
14. FLASHING LIGHT BEACONS
15. SUN SENSOR

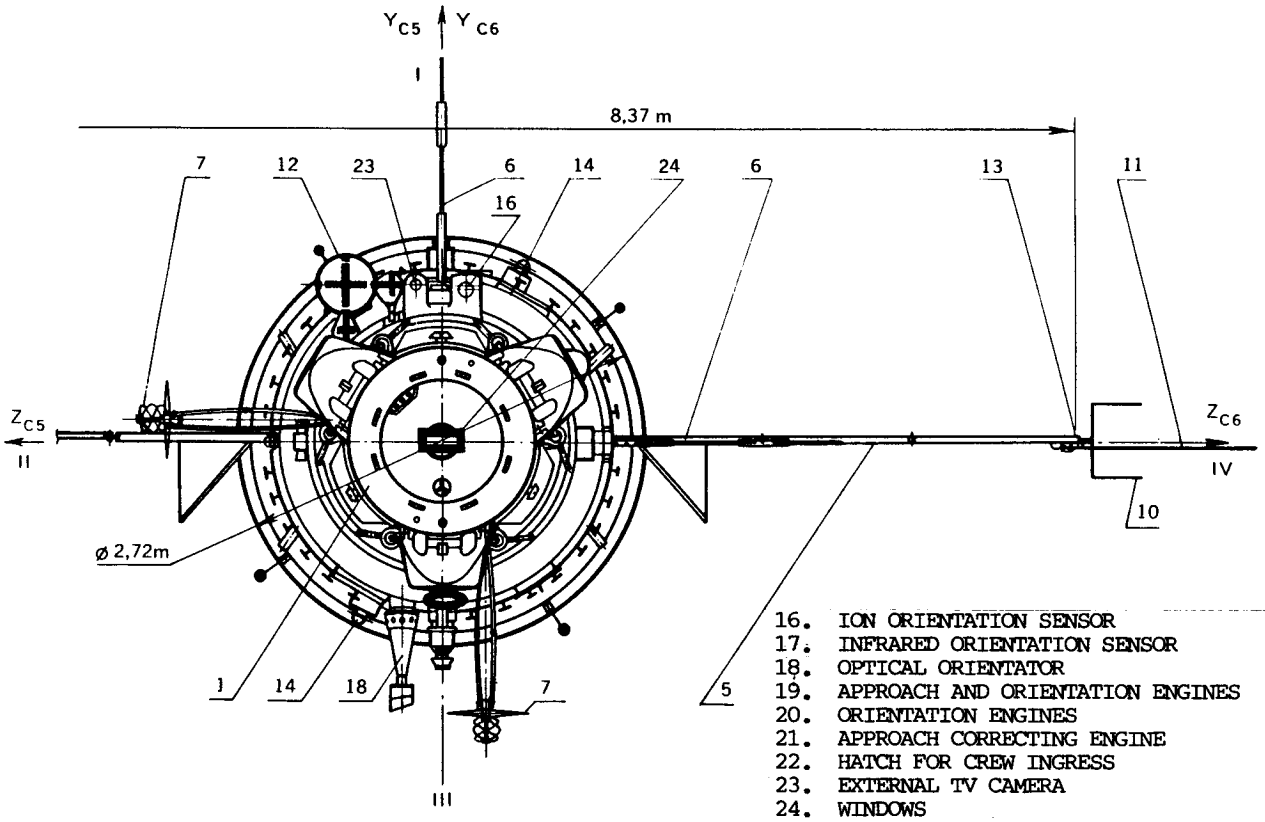

GENERAL VIEW OF THE SOUYZ SPACECRAFT (FRONT VIEW)

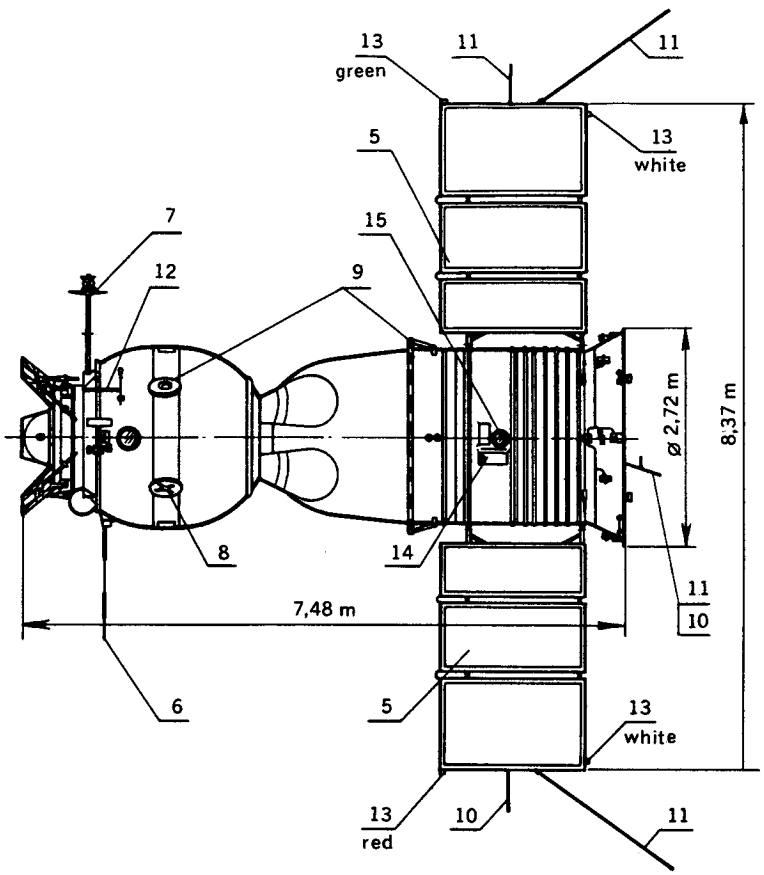

FIGURE 3.3 GENERAL VIEW OF THE SOYUZ SPACECRAFT (TOP VIEW)

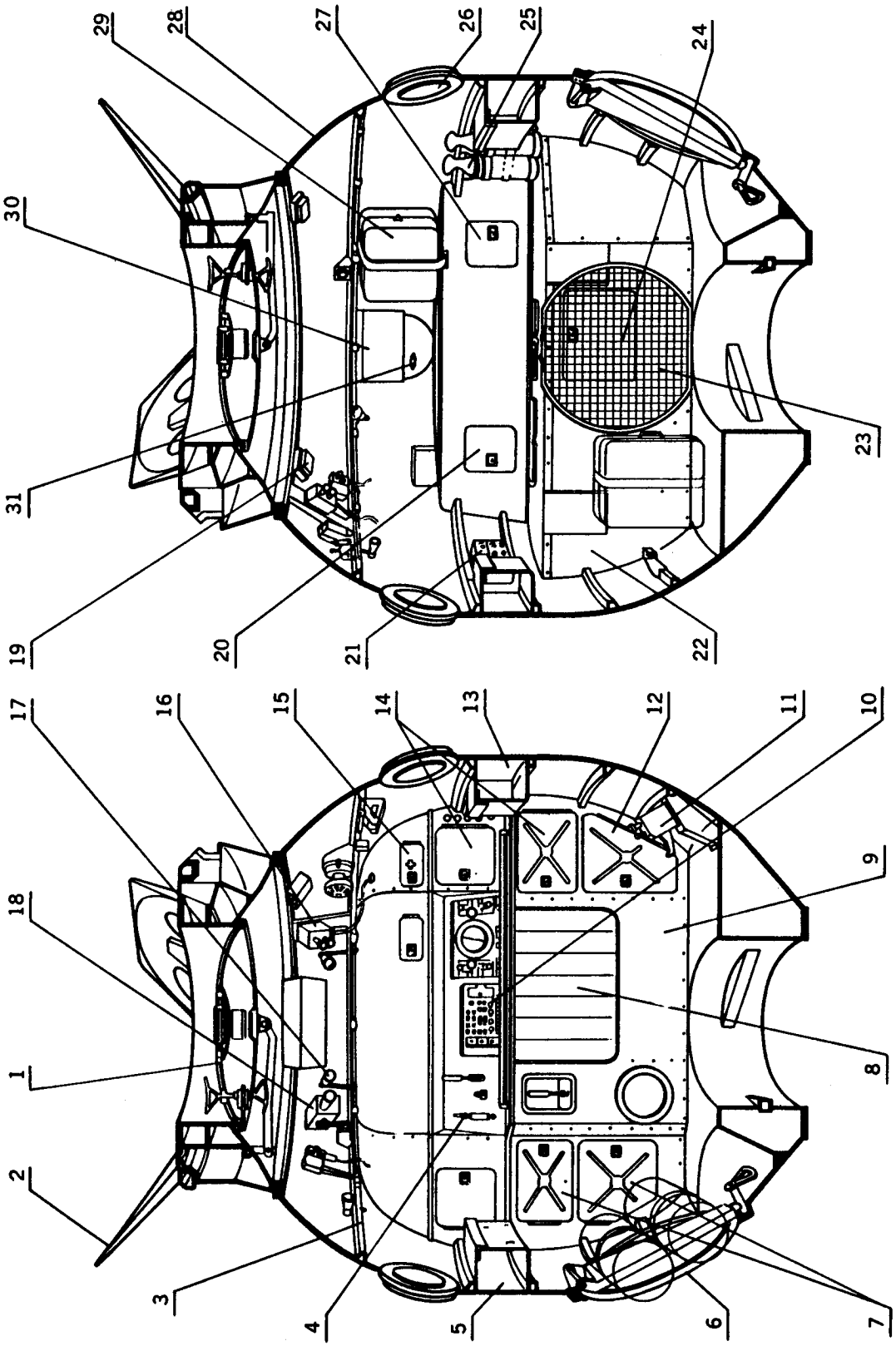

FIGURE 3.5 THE ORBITAL MODULE ARRANGEMENT

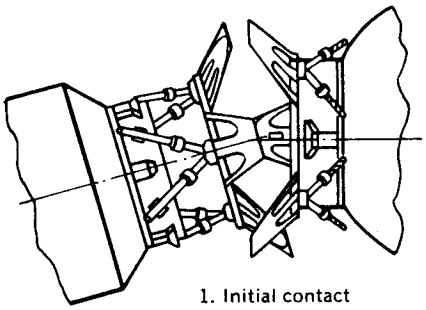

1. Initial contact

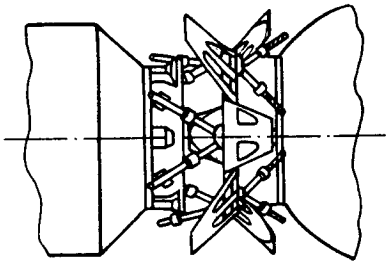

2. Guide ring mate and capture

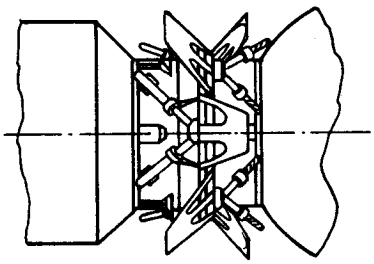

3. Mutual alignment and retraction

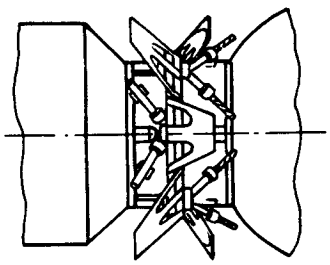

4. Hard and pressure-tight coupling

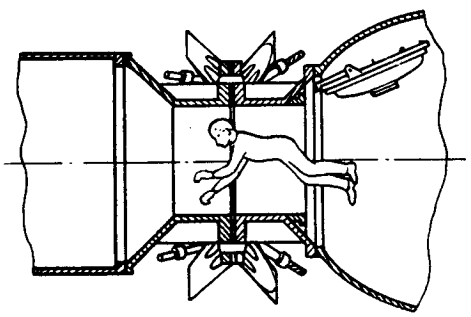

5. Cosmonauts' transfer

SOYUZ/APOLLO SPACECRAFT DOCKING SCHEMATIC

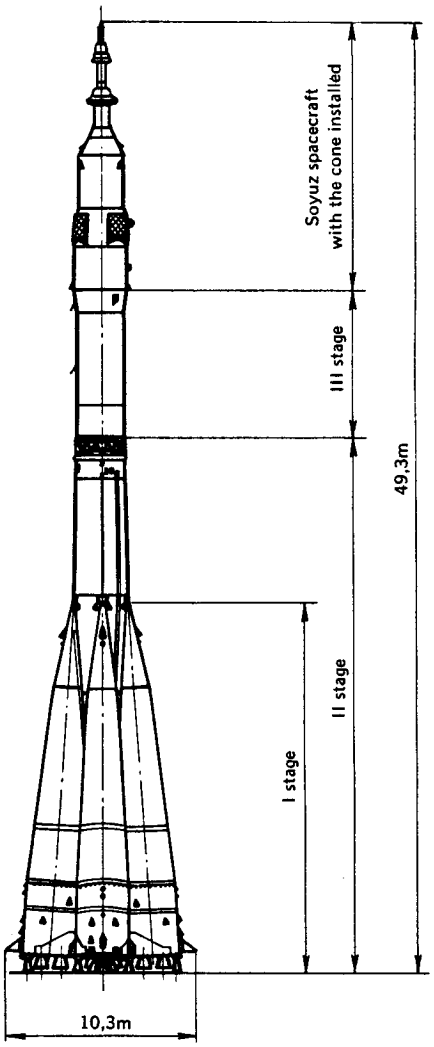

SOYUZ LAUNCH VEHICLE

ORBITAL MODULE:

1. HATCH COVER
2. DOCKING MECHANISM
3. HAND-RAIL
4. WATER DISPENSER
5. WASTE CONTAINER
6. ACCESS HATCH
7. WASTE COLLECTOR
8. FOLDING TABLE
9. "SIDEBOARD"
10. SYSTEMS CONTROL PANEL
11. TV CAMERA
12. TOOLS, COMMUNICATION CABLES
13. CONTAINER FOR SCIENTIFIC EQUIPMENT
14. FOOD CONTAINER
15. MEDICAL KIT, HEADSET
16. TV CAMERA
17. TV LIGHT
18. APOLLO TV CAMERA
19. WORKING LIGHTS
20. CONTAINER FOR ONBOARD DOCUMENTS
21. JUNCTION BOX
22. "SOFA"
23. COVER
24. CONTAINER FOR STOWAGE OF CINE AND PHOTOGRAPHY EQUIPMENT, PRESSURE SUITS AND SLEEPING BAGS
25. FIRE EXTINGUISHERS
26. WINDOW
27. CONTAINER FOR PRESSURE SUIT HOSES
28. DECORATIVE COVERING
29. CONTAINER FOR TRANSFERRED EQUIPMENT
30. GAS ANALYZER
31. HANDLE OF THE VALVE OF THE MODULE PRESSURIZATION SYSTEM

Designations

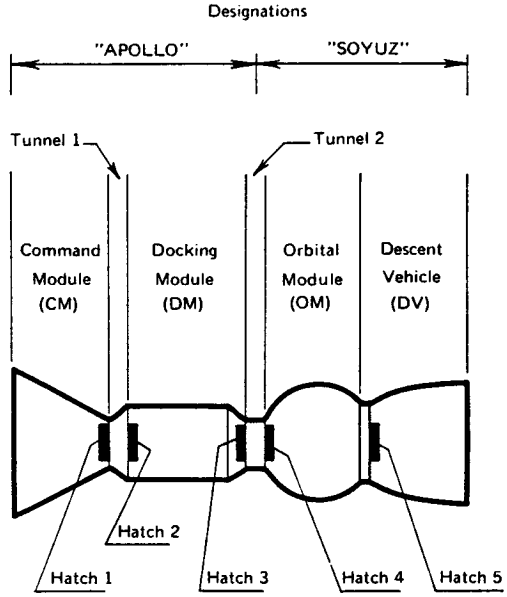

AC — Apollo Commander
DP — Docking Module Pilot
CP — Command Module Pilot
SC — Soyuz Commander
FE — Souyz Flight Engineer

ASTRONAUTS AND COSMONAUTS VEHICLE-TO-VEHICLE TRANSFER DIAGRAM

The first transfer

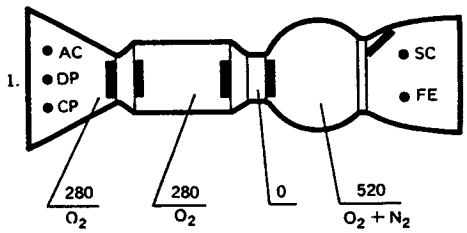

- Cosmonauts and astronauts location prior to transfer initiation

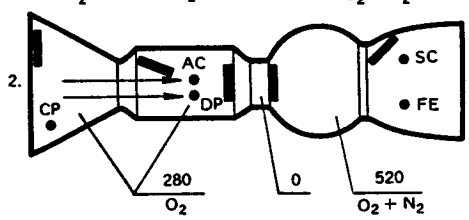

- Open hatch 2
- AC and DP transfer into DM

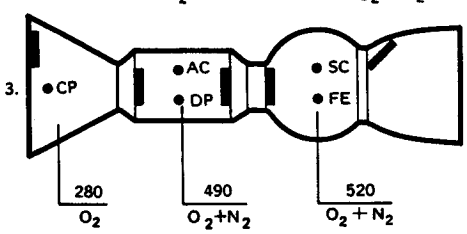

- Close hatch 2
- DM pressurization to 490 mm Hg (astronauts)

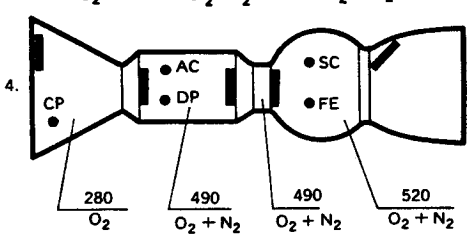

- DM — tunnel 2 pressure equalization (cosmonauts)

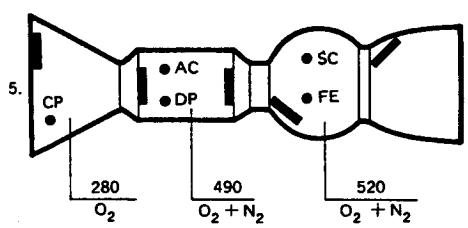

- Open hatch 4 (cosmonauts)

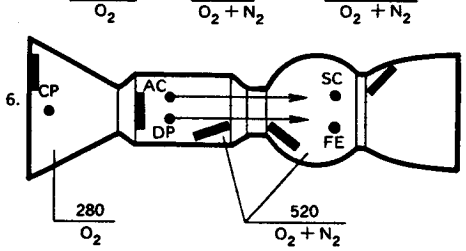

- DM — Souyz pressure equalization
- Open hatch 3 (astronauts)
- AC and DP transfer into Souyz

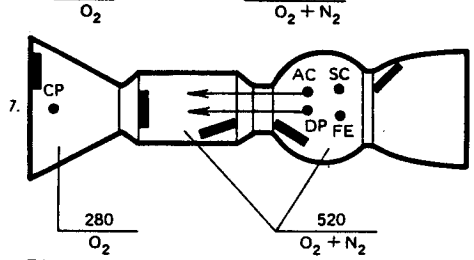

- AC and DP transfer into DM

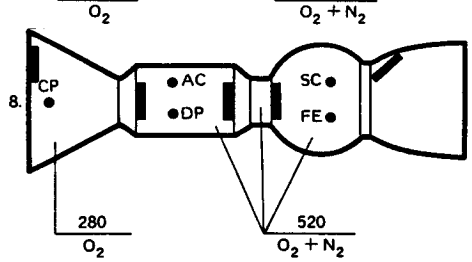

- Close hatch 3 (astronauts)
- Close hatch 4 (astronauts)

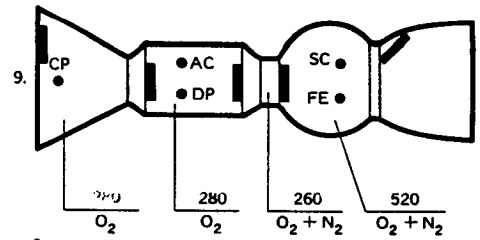

- Tunnel 2 depressurization to 260 mm Hg
- DM depressurization to 280 mm Hg and DM oxygen purge (astronauts)

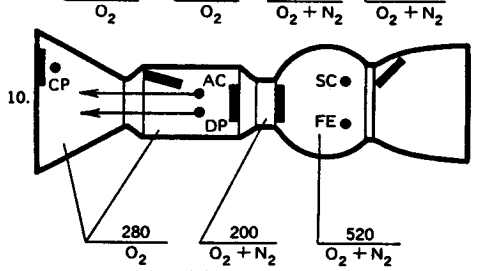

- Open hatch 2
- AC and DP transfer into CM

Second transfer

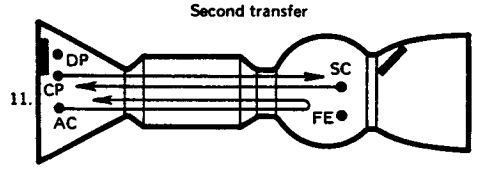

- CP transfer into Soyuz
- SC transfer into Apollo

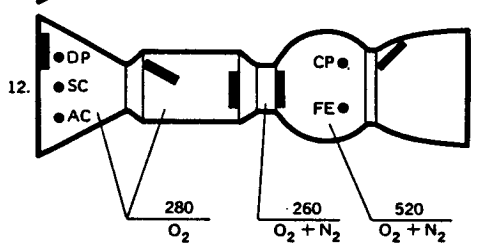

- Cosmonauts and astronauts location after the second transfer

The third transfer

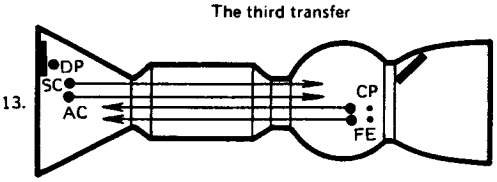

- SC and AC transfer into Souyz
- CP and FE transfer into Apollo

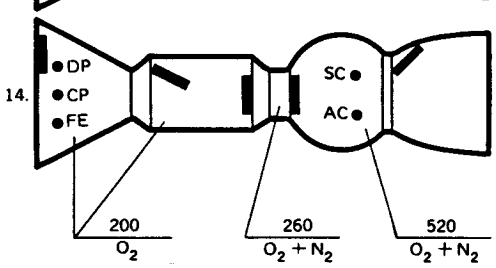

- Cosmonauts and astronauts location after the third transfer

The fourth transfer

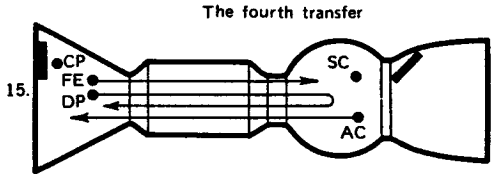

- FE transfer into Soyuz
- AC transfer into Apollo

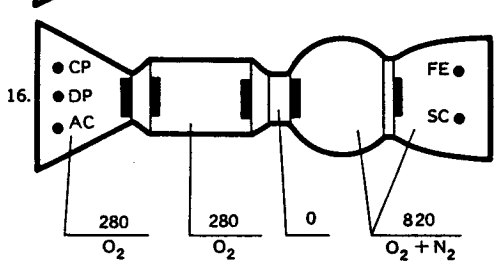

- Cosmonauts and astronauts location after the transfer completion

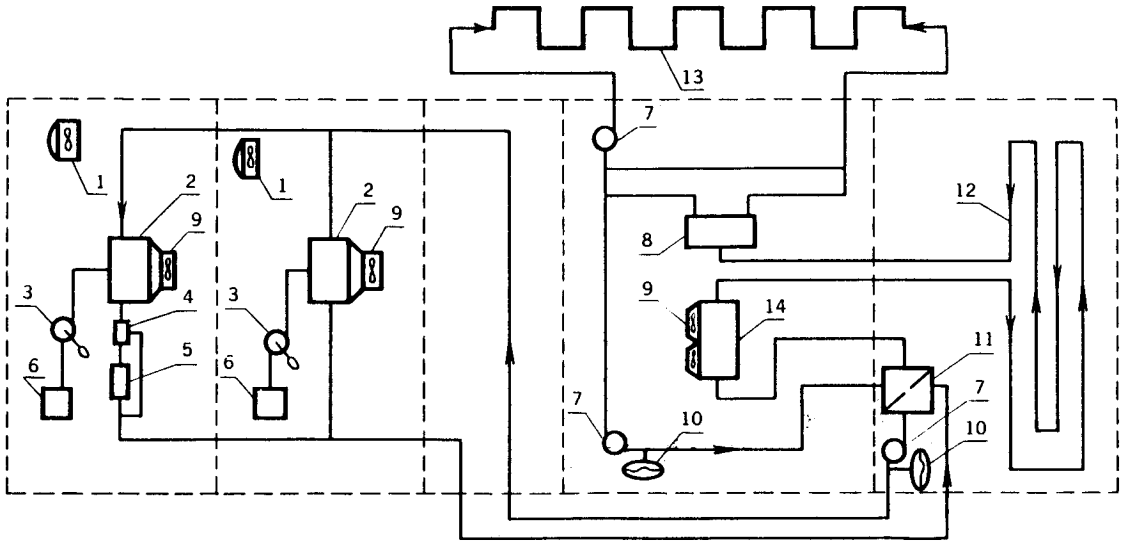

HEAT ACCUMULATION ELEMENTS: 2 — Heat exchanger-condenser; 11,14 — Heat exhcnager; 5 — Transceiver bracket

MOISTURE ACCUMULATION ELEMENTS: 3 — Moisture removal pump; 6 — Condensate collector

HYDRO-SYSTEM CONTROLLERS: 7 — Hydraulic pump; 8 — liquid flow regulator; 10 — Compensator; 4 — By-pass valve

HEAT- DISPOSAL ELEMENTS: 13 — Radiator.

VENTILATION ELEMENTS: 1 — Fan; 9 — Heat exchanger fans;

FIGURE 3.8 THERMAL CONTROL SYSTEM SCHEMATIC

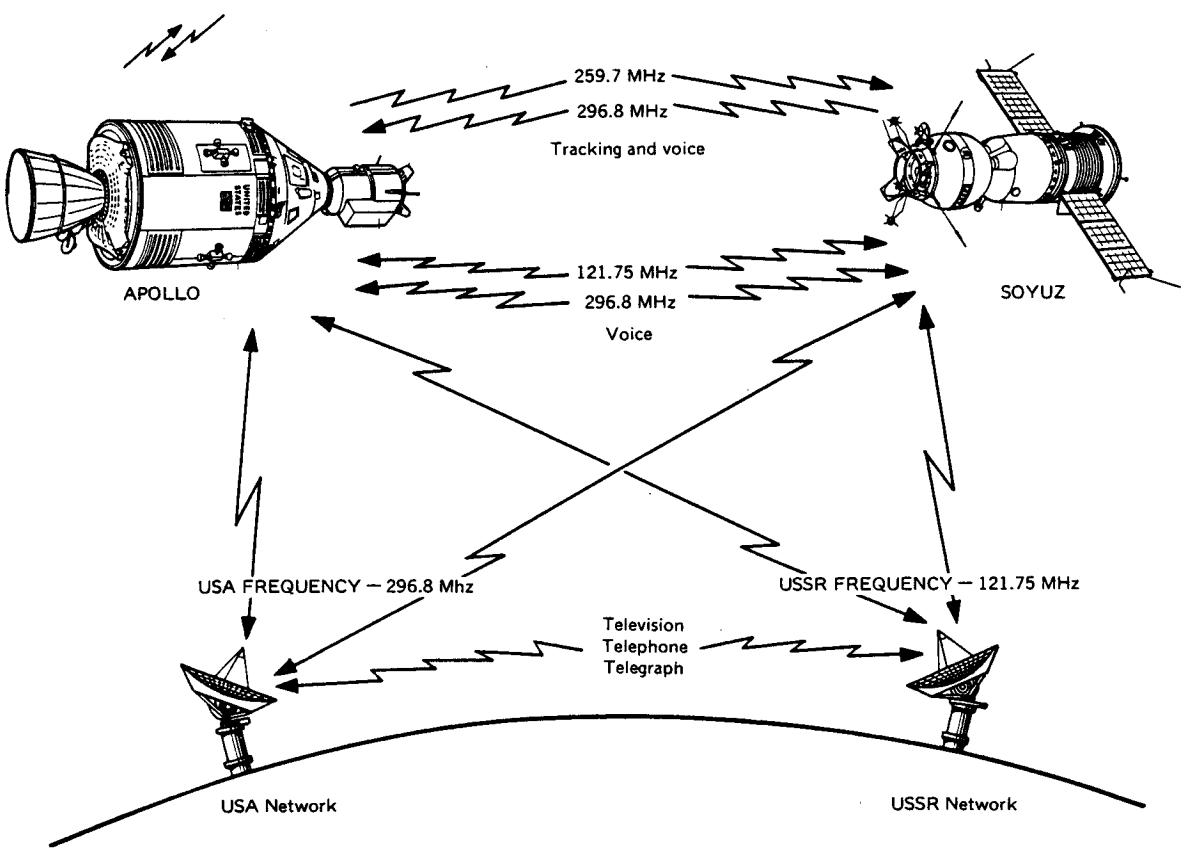

FIGURE 3.9 APOLLO SOYUZ TEST MISSION COMMUNICATIONS LINES

DOCKING SYSTEM ACTIVE

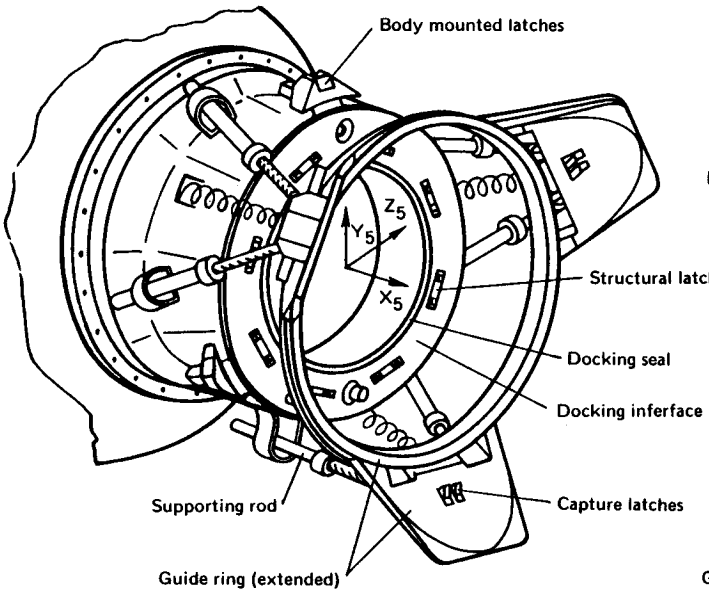

DOCKING SYSTEM PASSIVE

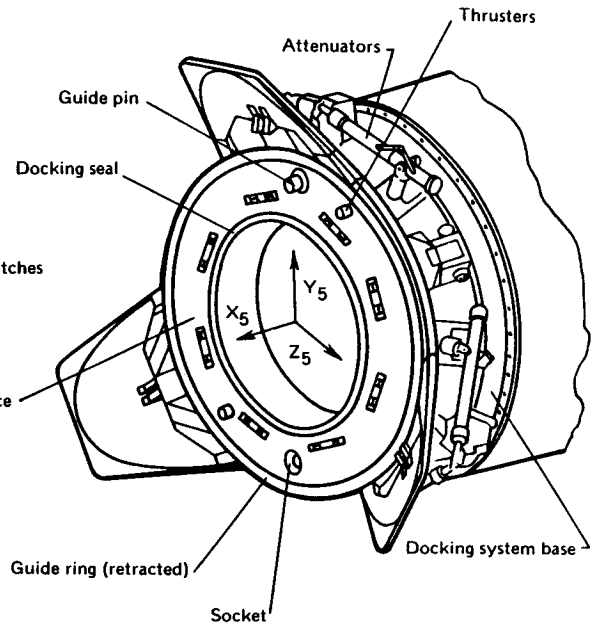

DOCKING SYSTEM

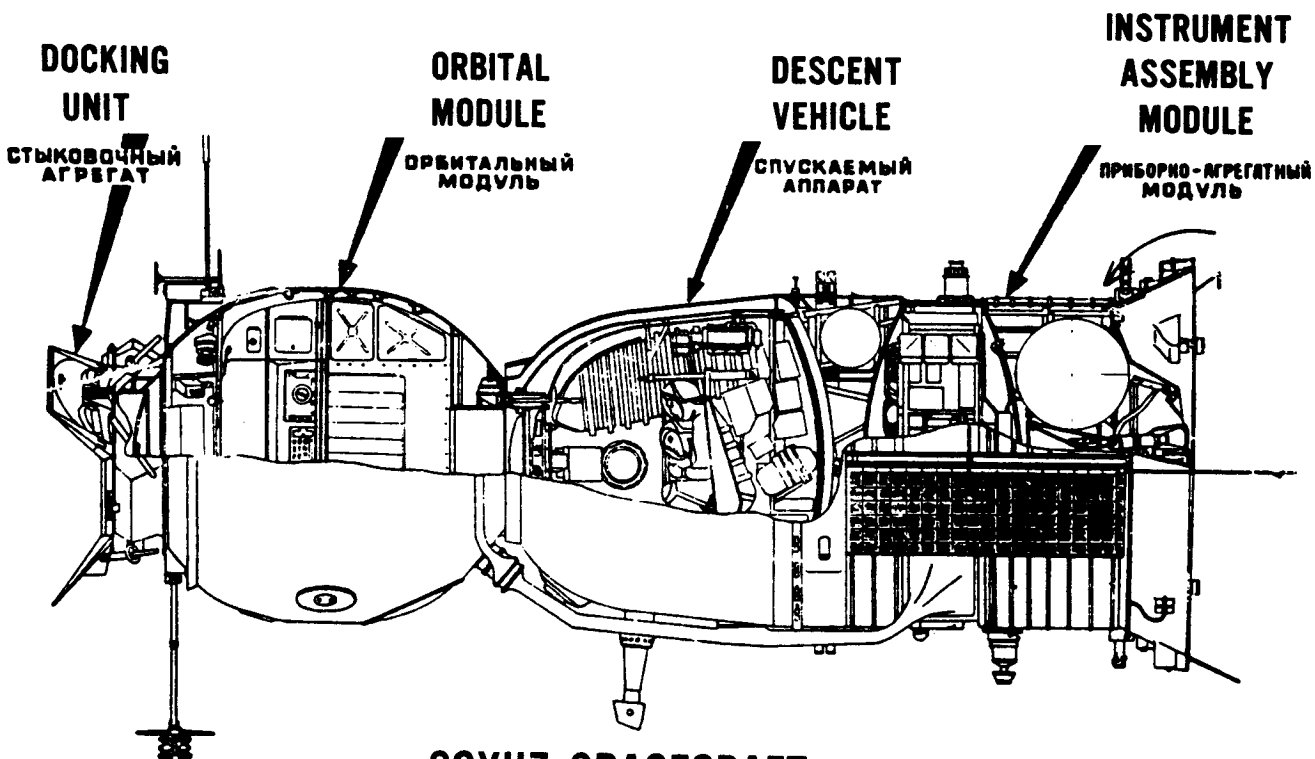

SOYUZ SPACECRAFT

КОСМИЧЕСКИЙ КОРАБЛЬ „СОЮЗ"

LAUNCH PHASE

On a nominal mission, Apollo will be launched from KSC's Complex 39-B on a northeasterly azimuth of 45.2° and will be inserted into a 150 by 167 kilometer (93 by 104 statute mile) orbit with an inclination of 51.8°.

Based on the nominal liftoff time and flight azimuth, first stage burnout of the Saturn IB is to occur at an altitude of 58 kilometers (36 miles) two minutes, 20 seconds after liftoff. The expended first stage will impact in the Atlantic Ocean 486 kilometers (302 miles) downrange 9 minutes after liftoff. The impact point will be 31.67° North latitude and 76.97° West longitude. This is about 482 kilometers (300 miles) east of Savannah, Georgia. Burnout of the Saturn IB's second stage will occur at an altitude of 158 kilometers (98 miles) 9 minutes, 42 seconds after liftoff. The second stage will go into orbit along with the spacecraft and will be deorbited later into the Pacific Ocean.

MISSION PROFILE

The Soyuz spacecraft will be launched at 8:20 AM Eastern Daylight Time July 15 from the Baykonur Cosmodrome (47.8° North latitude by 66° East longitude) near Tyuratam in the Kazakh Soviet Socialist Republic and inserted into a 188 by 228 kilometer (117 by 142 mile) Earth orbit at an inclination of 51.8°. The first of two circularization maneuvers will be performed if needed during the fourth orbit; the second maneuver to circularize Soyuz at 225 kilometers (140 miles) will be made July 16 during the 17th orbit of Soyuz.

Soyuz tracking data will be passed to Apollo Mission Control and Launch Control Centers for fine-tuning the Apollo liftoff time and launch azimuth. The Apollo spacecraft predicted liftoff time is 3:50 PM EDT from KSC Launch Complex 39B at 7 hours 30 minutes Soyuz Ground Elapsed Time. Apollo will be inserted into an initial 150 by 167 kilometer (93 by 104 mile) orbit.

The Apollo command/service module will separate from the Saturn S-IVB stage at about 1 hour 13 minutes Apollo Ground Elapsed Time, pitch over 180° and dock with and extract the docking module housed in the adapter where lunar modules were stowed for launch during the lunar landing program. A one meter per second (3.3 feet per second) posigrade evasive maneuver after docking module extraction will eliminate any possibility of recontact between the spacecraft and rocket stage. Provided enough residual propellants are aboard the S-IVB, an attempt will be made to deorbit the stage into a remote area of the Pacific Ocean.

The classic rendezvous technique, similar to the sequence followed by the command/service module in reaching the Skylab space station, will begin after Apollo has circularized at 169 kilometers (105 miles) with a 6.3 meters per second (20.7 feet per second) service propulsion system posigrade burn at 7:35 PM EDT. Rendezvous maneuvers will be Phasing 1 (NC1) at 9:30 PM EDT (service propulsion system, 20.2 meters per second [66.3 feet per second] posigrade) followed at 10:35 PM EDT with an opportunity for a plane-change maneuver, if needed, to correct for any out-of-plane angles in Apollo's orbit. Soyuz will circularize to 225 kilometers (140 miles) at 8:46 AM EDT July 16 with a 12.2 meters per second (40 feet per second) posigrade maneuver.

Apollo maneuvers to complete the rendezvous are: phasing correction (PCM) at 4:42 PM EDT -- nominally zero velocity change; phasing 2 (NC2) at 8:54 AM EDT July 17, service propulsion system, 11.1 meters per second (36.4 feet per second) posigrade; corrective combination (NCC) at 9:38 AM EDT, 12.2 meters per second (40 feet per second) posigrade; coelliptic (NSR) at 10:15 AM EDT to produce a differential height of 18.5 kilometers (11.1 miles) and a rate of closure of 1.85 kilometers per minute (1.1 miles per minute) service propulsion system, 8.3 meters per second (27.2 feet per second) posigrade. Terminal phase initiation (TPI) will begin at 11:14 AM EDT when the Apollo-to-Soyuz line of sight reaches 27° (service propulsion system, 6.7 meters per second [22 feet per second] posigrade); braking should begin at 11:43 AM EDT, and Apollo will begin stationkeeping with Soyuz at 11:52 AM EDT. Hard docking will take place at 12:15 PM EDT over Europe during the Soyuz' 36th and Apollo's 29th orbit.

During the two days that Apollo and Soyuz are docked together for joint operations, there will be four crew transfers between spacecraft. One or two Apollo crewmen will visit Soyuz at a time, and one Soyuz crewman will visit Apollo at a time.

Apollo will undock from Soyuz at 8:02 AM EDT on July 19 and serve as a solar occulting disc for the MA-148 Artificial Solar Eclipse experiment conducted by Soyuz. The Soyuz docking system will be active for a second docking test following the artificial eclipse experiment and final undocking will be at 11:01 AM EDT July 19. Apollo will perform a "fly-around" of Soyuz at distances ranging from 150 meters to 1 kilometer (492 feet to .6 miles) while performing the MA-059 Ultraviolet Absorption experiment. A 0.7 meters per second (2.3 feet per second) Apollo reaction control system separation burn at 4:04 PM EDT July 19 will prevent recontact by the two spacecraft for the rest of the mission.

About 43 hours after final undocking, Soyuz will deorbit with a 65.2 meter per second (214 feet per second) retrograde burn at 6:06 AM EDT to land near Karaganda, Kazakh USSR (50° North latitude by 71° East longitude). Soyuz will touch down at 6:51 AM EDT July 21.

Apollo will remain in orbit an additional five days for unilateral experiments, including the MA-089 Doppler Tracking experiment which requires that the docking module be jettisoned with a rotation (end-over-end) rate of 5° per second. The docking module will be jettisoned at 3:41 PM EDT on July 23, and a two-phase command/service module maneuver will stabilize the final docking module separation at about 500 kilometers (310 miles). Both maneuvers are 10.4 meters per second (34 feet per second) service propulsion system burns.

Apollo deorbit will begin at 4:38 PM EDT July 24 with a 58.6 meter per second (192 feet per second) service propulsion system retrograde burn over the southern Indian Ocean, with splashdown about 40 minutes later (5:18 PM EDT) in the Pacific Ocean about 555 kilometers (345 miles) west of Honolulu at 22° North latitude by 163° West longitude. The service module will be jettisoned about 5 minutes after deorbit burn cutoff. Communications relay through ATS-6 will cease with the loss of the high-gain antenna at service module jettison.

APOLLO SPACECRAFT

Command/Service Module The Apollo command/service module to be flown for the ASTP mission is similar in most regards to the ones flown in ferrying Skylab crews to and from the space station, except that some modifications were made to the spacecraft to fit the mission needs.

For example, the steerable high-gain antenna that was used for deep-space communications during the Apollo lunar missions but was not needed for Earth-orbit Skylab missions was installed again on ASTP-command/service module 111. The antenna will lock on to the ATS-6 satellite in synchronous orbit, thus providing communications with Mission Control for 55% of each orbit. Additional controls for the docking system and special command/service module-to-docking module umbilicals had to be added, together with experiment packages and their controls.

Command Module (CM) The command module is a pressure vessel encased in a heatshield, cone-shaped, weighing 5944 kilograms (13,105 pounds) at launch.

The command module consists of a forward compartment containing two entry-attitude reaction control thrusters and components of the Earth landing system; the crew compartment or inner pressure vessel containing crew accommodations, controls and displays, and many of the spacecraft systems; and the aft compartment housing 10 entry-attitude reaction control thrusters, propellant tankage, helium tanks, water tanks and the command/service module umbilical cable. The crew compartment has 6 cubic meters (210 cubic feet) of habitable volume.

Heatshields around the three compartments are made of brazed stainless steel honeycomb with an outer layer of phenolic epoxy resin as an ablative material.

The command/service module and docking module are fitted with the standard probe-and-drogue docking hardware that was used in docking with the lunar module in the Apollo program and with the space station in the Skylab program. The probe assembly is a powered folding coupling and impact attenuating device mounted in the command module docking tunnel that mates with a conical drogue mounted in the docking module docking tunnel. After inter-tunnel pressure has equalized and the 12 automatic docking latches are checked, both the probe and drogue are removed to allow crew transfer between Apollo and Soyuz.

Service Module (SM) The Apollo service module will weigh 6787 kilograms (14,949 pounds) at launch, of which 1233 kilograms (2727 pounds) is propellant for the 91,840-newton (20,500-pound) thrust service propulsion engine. (Fuel: 50/50 hydrazine and unsymmetrical dimethyl-hydrazine; oxidizer: nitrogen tetroxide). Aluminum honeycomb panels 2.54 centimeters (one inch) thick form the outer skin, and milled aluminum radial beams separate the interior into six sections around a central cylinder containing a service propulsion system helium pressurant tank. Housed in the bays between the radial beams are service propulsion system and reaction control system propellant tanks, three fuel cells and their cryogenic oxygen and hydrogen tanks, and equipment peculiar to the ASTP mission, such as electronics for the ATS-6 communications satellite relay and experiment packages.

The combined weight of the command/service module and docking module at orbital insertion will be 14,737 kilograms (32,490 pounds).

Spacecraft-Lunar Module Adapter (SLA) Structure The spacecraft-lunar module adapter is a truncated cone 8.5 meters (28 feet) long tapering from 6.7 meters (22 feet) diameter at the base to 3.9 meters (12.8 feet) at the forward end where it connects to the service module. The spacecraft-lunar module adapter weighs 2089 kilograms (4605 pounds) and houses the docking module which is mounted on a truss frame until command/service module turnaround and docking module extraction following orbital insertion. The spacecraft-lunar module adapter quarter panels will be jettisoned as on lunar missions.

Docking Module The docking module is basically an airlock with docking facilities on each end to allow crew transfer between the Apollo and Soyuz spacecraft. The docking module is 3.15 meters (10 feet 4 inches) long, and 1.4 meters (4 feet 8 inches) maximum diameter and weighs 2012 kilograms (4436 pounds). The docking module pressure vessel is formed from a welded cylinder of 1.58 centimeters (5/8 inches) thick aluminum, with a tapered bulkhead and tunnel section on the command module end and a machined base assembly and bulkhead on the Soyuz end.

A systems module inside the docking module contains control and display panels, VHF/FM transceiver, environmental control life support system components and storage compartments. Other equipment in the docking module includes oxygen masks, fire extinguisher, floodlights and handholds, a junction box ("J-box") for linking Soyuz communications circuits to Apollo, the MA-010 Multipurpose Furnace and two removable stowage lockers containing TV equipment, spare carbon dioxide absorption cartridges and miscellaneous items.

Gaseous oxygen and nitrogen are stored in four identical spherical tanks external to the pressure vessel and in two pairs shielded by insulated covers. A total of 18.9 kilograms (41.7 pounds) of nitrogen and 21.7 kilograms (47.8 pounds) of oxygen (both at 63,279 grams per square centimeter [900 pounds per square inch] pressure).

The docking module pressure vessel and external tankage are covered with an external insulation cover made up of thin inconel over a multi-layer insulation blanket separated from the vessel by a framework.

Docking System The docking system for the command/service module/docking module docking was discussed in the command/service module section. The docking system for docking module/Soyuz docking is the compatible docking assembly designed and tested jointly by NASA and Soviet space engineers. This universal docking

assembly can be operated in either an active or passive mode for docking operations. The Apollo system consists of an extendable guide ring with three petal-like guide plates, three capture latches, and six hydraulic attenuators to provide for initial capture and impact attenuation of Soyuz. After capture, the guide ring is retracted by a cable drive system to compress pressure seals between the Apollo and Soyuz after which eight structural latches engage to hold the two spacecraft together.

All docking module electrical power is supplied by the umbilical from the command/service module, and all docking module carbon dioxide and humidity scrubbing is provided by either the command/service module or Soyuz environmental control systems.

Apollo's orbital atmosphere is 100% oxygen at 258 millimeters of mercury (5 pounds per square inch), while the Soyuz atmosphere is normally an oxygen/nitrogen mix at 760 millimeters of mercury (14.7 pounds per square inch). Transferring from Soyuz to Apollo in these conditions normally would require the cosmonauts to prebreathe pure oxygen to purge suspended nitrogen from their blood streams, but by lowering the Soyuz pressure to 518 millimeters of mercury (10 pounds per square inch), crew inter-spacecraft transfers can be made without time-consuming pre-breathing. Hatches at both ends of the docking module and pressure equalization valves permit crew transfers without disturbing the atmospheres in either spacecraft.

The Apollo spacecraft and docking module were manufactured by Rockwell International Space Division, Downey, California.

SATURN 1B LAUNCH VEHICLE

SA-210 is the Saturn IB launch vehicle scheduled for use in the Apollo Soyuz Test Project on July 15, 1975, with SA-209 as a back-up vehicle.

The ASTP launch is the final scheduled launch of a Saturn IB vehicle. After the ASTP mission, if only one Saturn IB is used, there will remain two complete Saturn IB vehicles in reserve, SA-209 and SA-211.

HISTORY OF THE ASTP LAUNCH VEHICLE (SA-210)

The ASTP launch vehicle's first stage (designated S-IB-10) was manufactured at Marshall Space Flight Center's Michoud Assembly Facility, with the Chrysler Corporation as contractor. The stage was completed in January, 1967.

Static firing tests were held at Marshall Space Flight Center in May, 1967. The stage was returned to Michoud Assembly Facility for storage. The stage was removed from storage in October 1972, for modification, refurbishment and checkout. It was shipped to KSC in April, 1974. There it was stored in the Vehicle Assembly Building (VAB) until November 1974. Then the stage was removed from storage and erected vertically, and post-storage checkout began. In early January 1975, the stage was moved into the Vehicle Assembly Building's high-bay area for further checkout, and was placed on its mobile launcher.

Here the second stage was mated to the booster, and the instrument unit was added to the stack to complete the launch vehicle.

Manufacturing of the second stage (S-IVB-210) had been finished in the spring of 1967 by the contractor, McDonnell-Douglas, at its Huntington Beach, California facility.

The stage was removed from storage there and shipped in November 1972 to Kennedy Space Center, where it was stored in the VAB until September 1974. After removal, post-storage checkout was performed prior to stacking atop the first stage.

The ASTP launch will be the 32nd, and final, scheduled launch of a vehicle of the Saturn class.

ASTP EXPERIMENTS

The 27 experiments to be conducted during the ASTP mission fall into three basic categories: space sciences, life sciences and applications.

Five of the space sciences experiments examine phenomena within the solar system and toward the outer fringes of our galaxy, while five other experiments look inward toward the Earth and its envelope of atmosphere.

The space sciences - astronomy experiments are:

MA-048 Soft X-Ray / to observe X-ray sources within and outside of our galaxy;

MA-083 Extreme Ultraviolet Survey / of our galaxy;

MA-088 Helium Glow Detector / to observe the interstellar medium near our solar system;

MA-148 Artificial Solar Eclipse / to observe the solar corona;

MA-151 Crystal Activation / to investigate the effects of particle radiation in Earth orbit on instrument noise levels of gamma-ray detectors.

Space sciences - Earth environment experiments are:

MA-059 Ultraviolet Absorption / to measure atomic constituents of the Earth's upper atmosphere;

MA-007 Stratospheric Aerosol Measurements / to measure the stratosphere's aerosol content;

MA-136 Earth Observations and Photography / to study surface features on Earth;

MA-089 Doppler Tracking / to measure mass distribution below the Earth's surface;

MA-128 Geodynamics / also to measure mass distribution below the Earth's surface.

Life sciences experiments on ASTP have two objectives: to investigate the effects of heavy, charged particles upon live cells; and to study the effects of spaceflight upon the human immune system.

Live-cell experiments are:

MA-106 Light Flash / to measure the effects of particles upon the human retina;

MA-147 Zone Forming Fungi / to measure particle effect upon growing bacteria cells;

MA-107 Biostack / to measure particle effect upon seeds and eggs.

Human immune system experiments are:

AR-002 Microbial Exchange; MA-031 Cellular Immune Response; MA-032 Polymorphonuclear Leukocyte Response.

ASTP applications experiments investigate the isolation of medically-useful substances by electrophoresis, and processing of materials in weightlessness. Applications experiments are:

MA-011 Electrophoresis Technology;

MA-014 Electrophoresis;

MA-010 Multipurpose Furnace / which includes seven high-temperature processing experiments;

MA-028 Crystal Growth / in which material is processed at ambient temperatures.

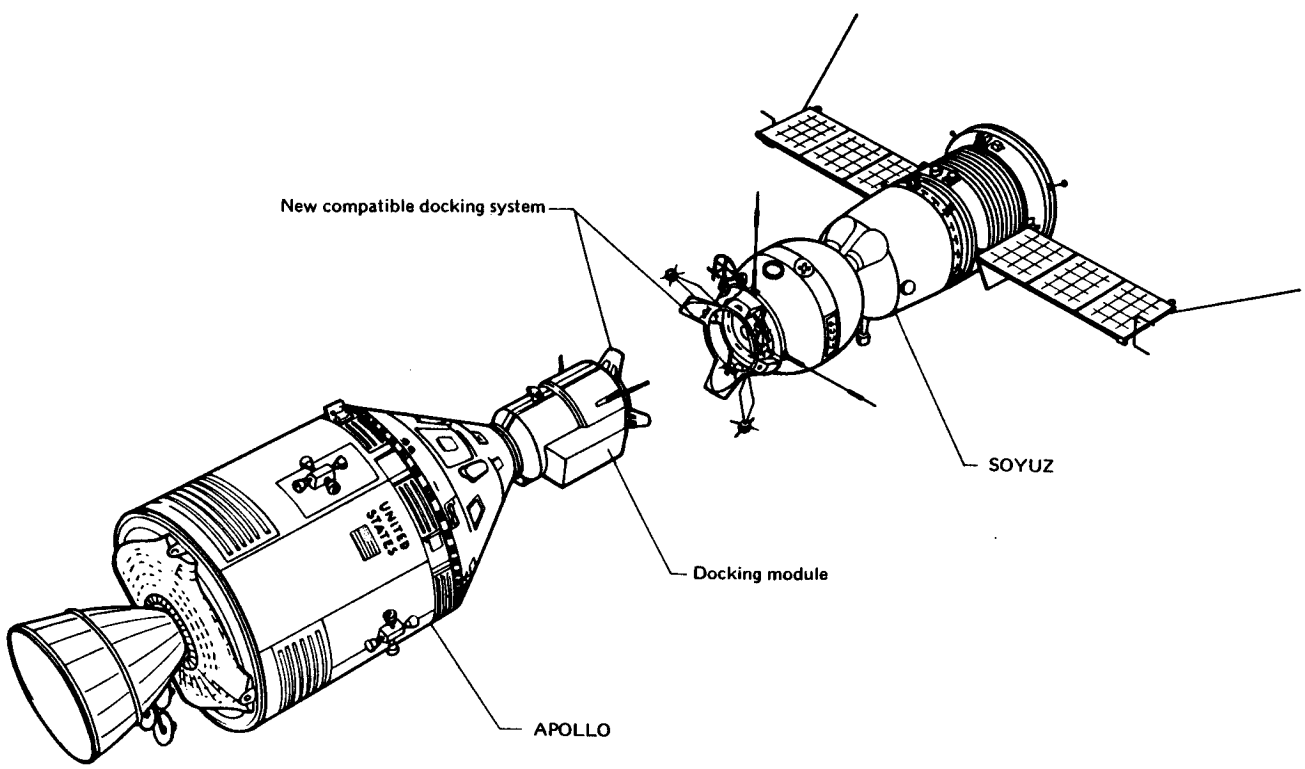

ASTP MAJOR APOLLO MODIFICATIONS

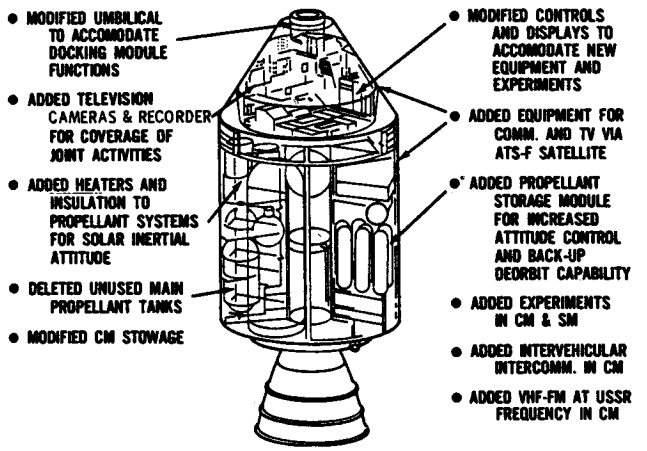

NEW COMPATIBLE DOCKING SYSTEM

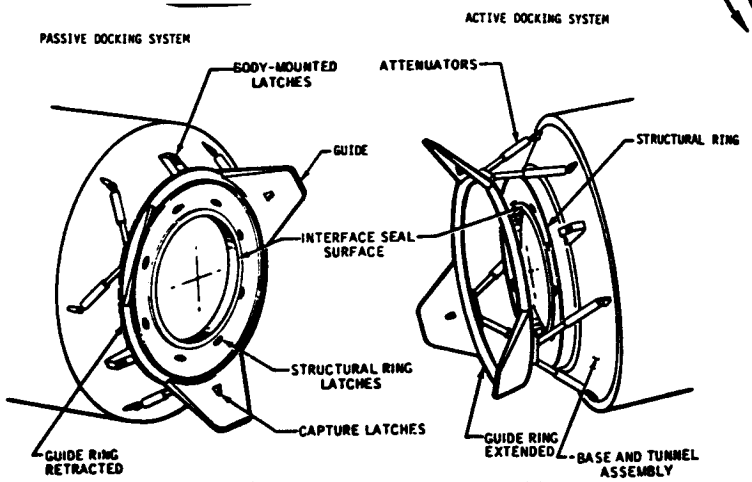

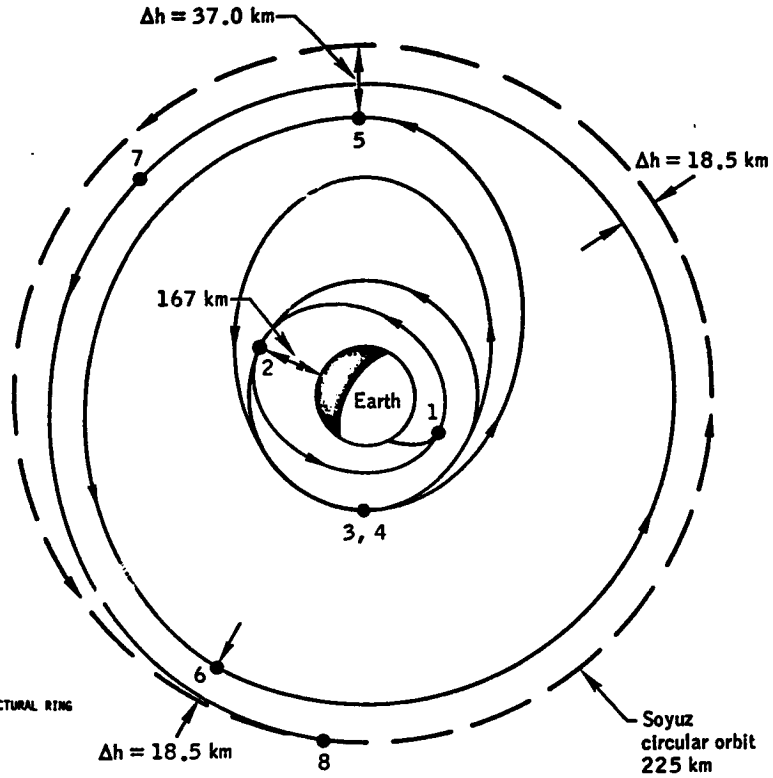

1 Insertion - 150 by 167 km
2 Circularization
3 Phasing 1 (NC1)
4 Phasing 2 (NC2)
5 Corrective combination (NCC)
6 Coelliptic (NSR)
7 TPI
8 Braking (TPF)

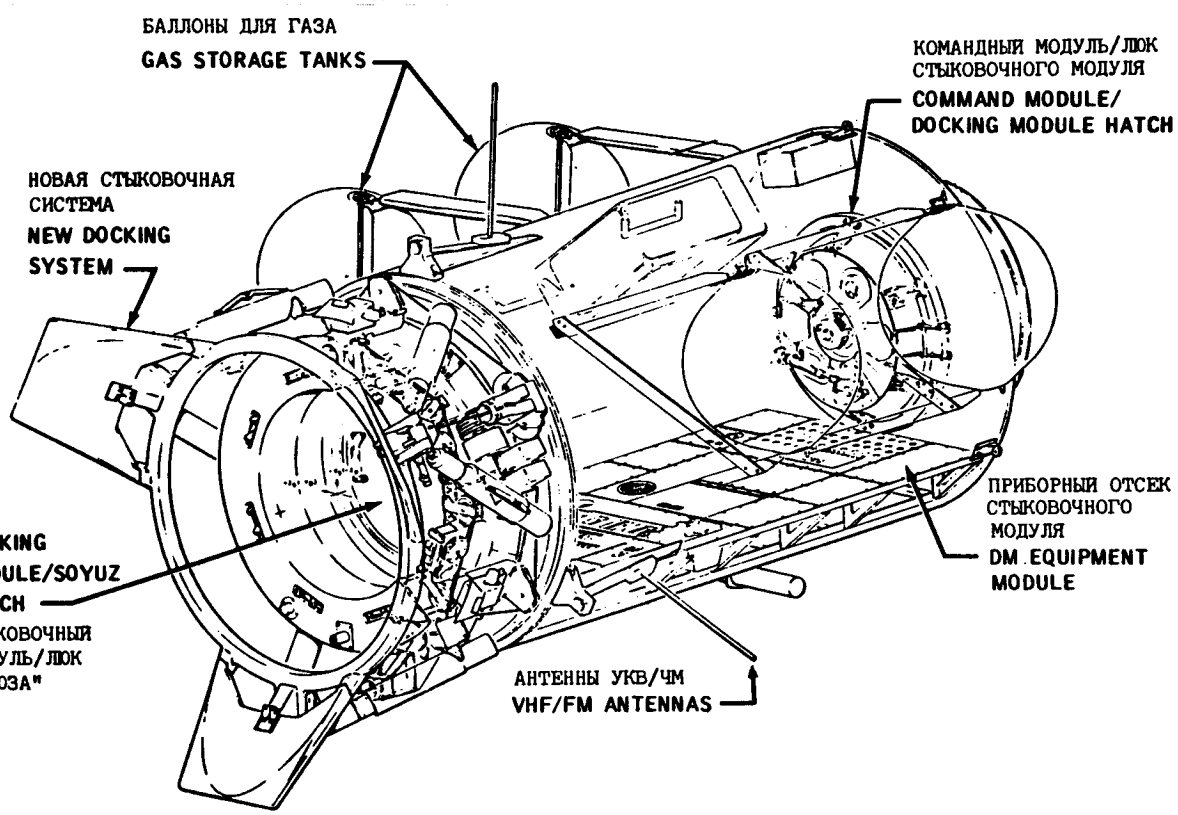

СТЫКОВОЧНЫЙ МОДУЛЬ ЭПАС
ASTP Docking Module

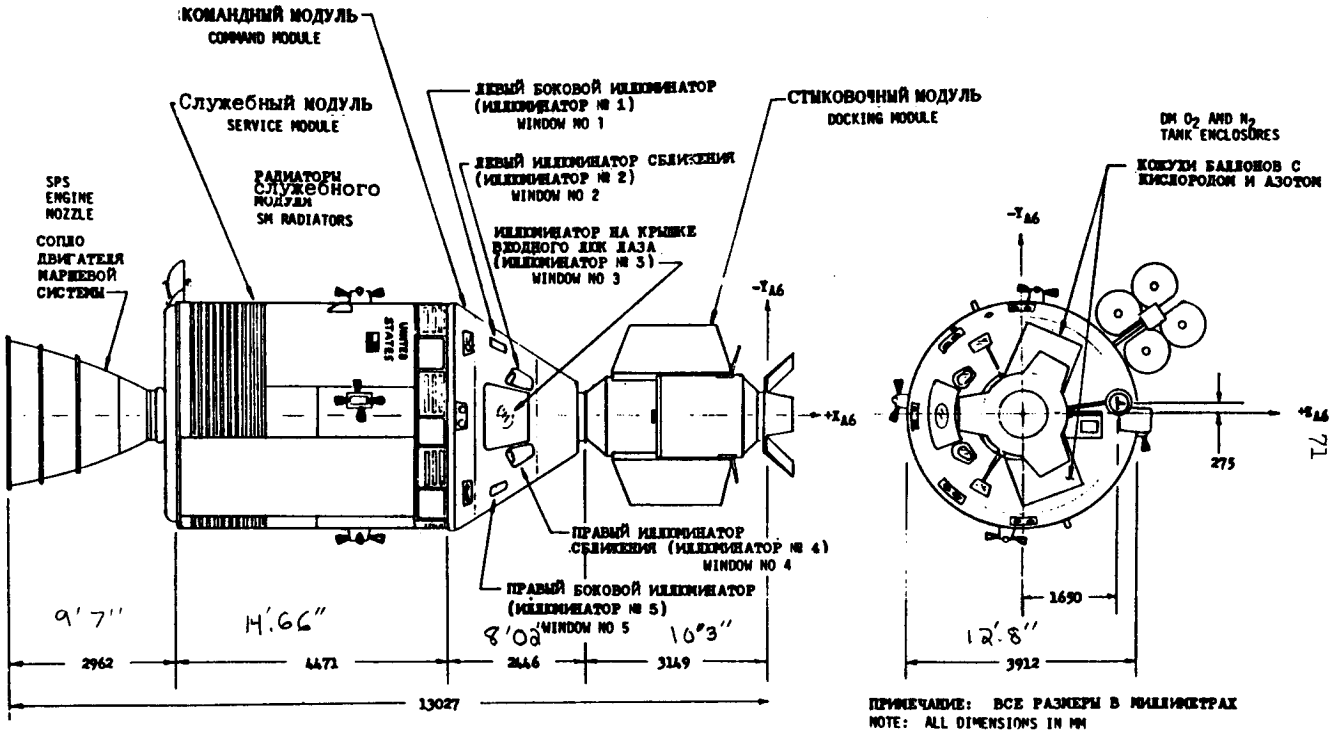

КОНФИГУРАЦИЯ КОРАБЛЯ АПОЛЛОН (ВИД СВЕРХУ И СПЕРЕДИ)

APOLLO SPACECRAFT CONFIGURATION (TOP AND FRONT VIEWS)

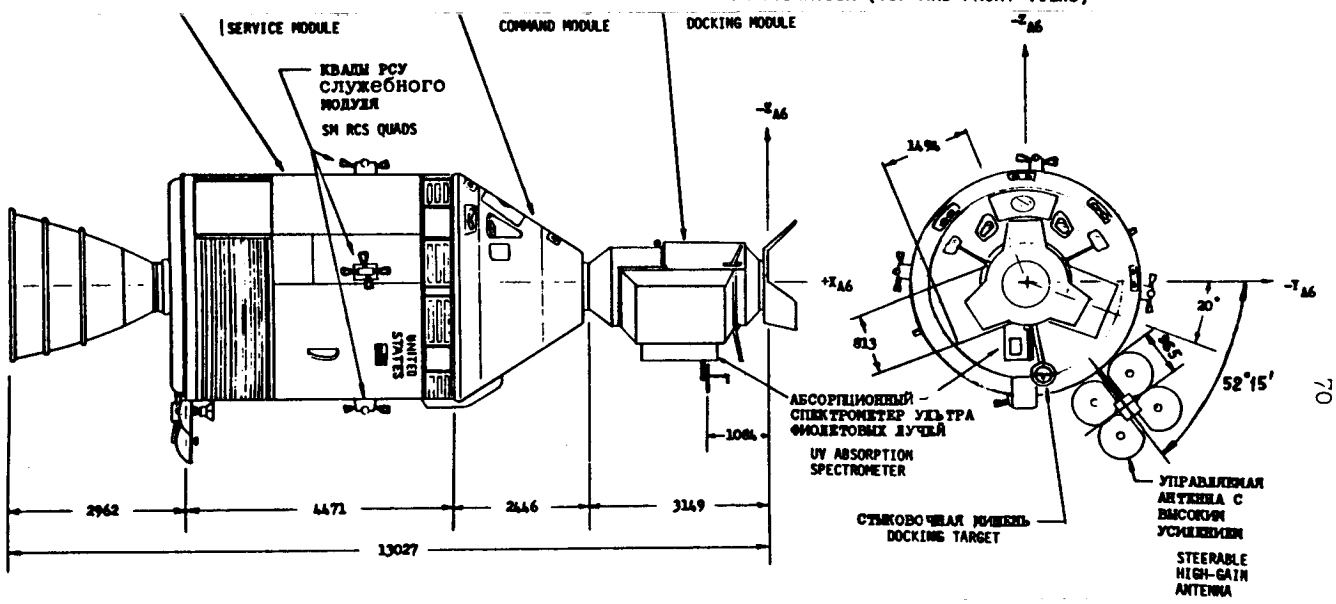

APOLLO SPACECRAFT CONFIGURATION (SIDE AND FRONT VIEWS)

CSM/DM ORBITAL CONFIGURATION

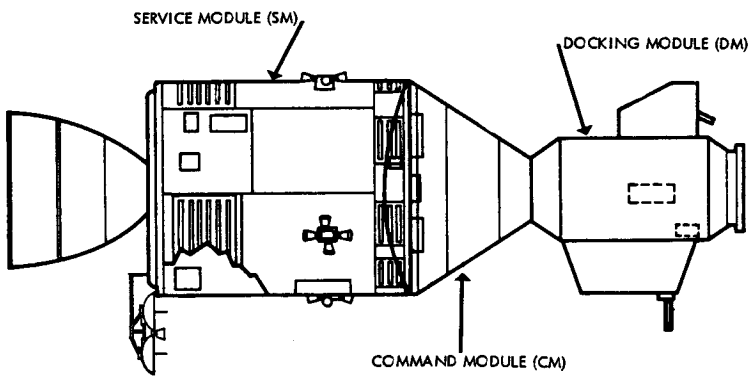

CM GENERAL ARRANGEMENT

EXPERIMENTS AND ATS-6 LOCATION SCHEMATIC (CSM-III)

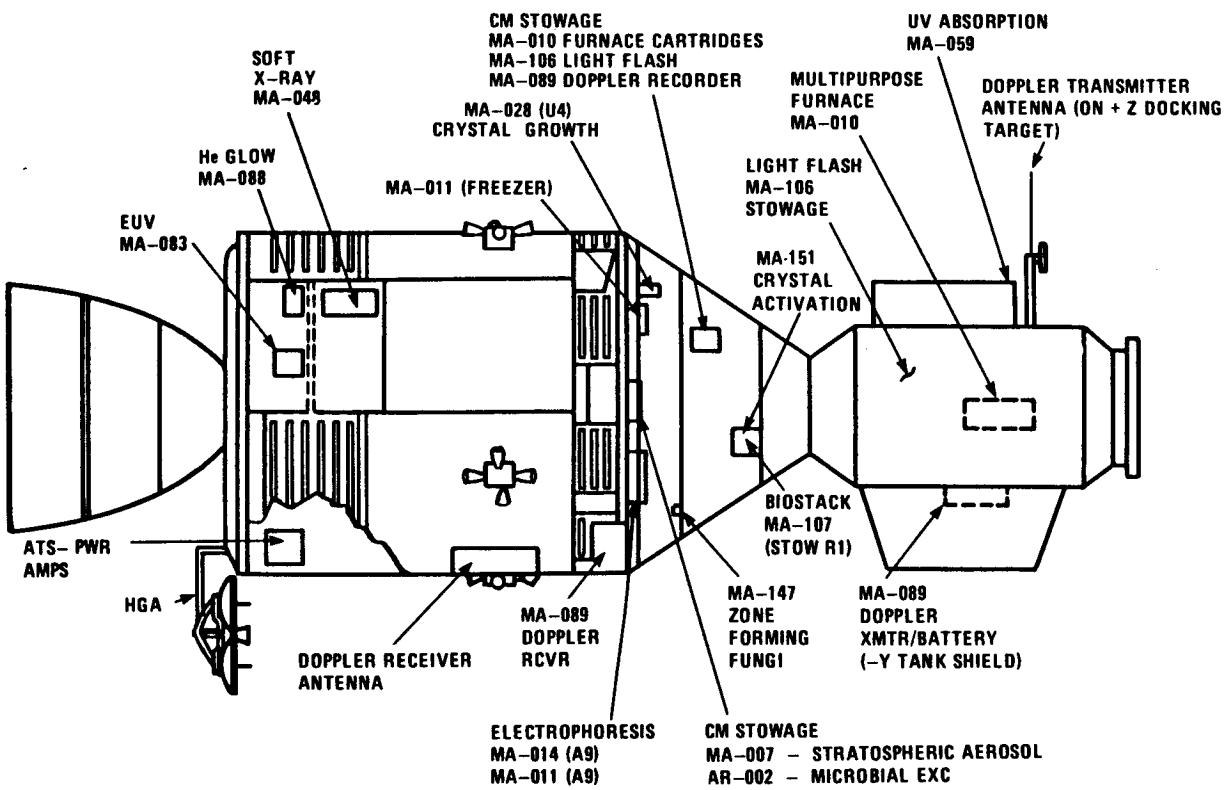

ASTP EXPERIMENTS
CM CONFIGURATION

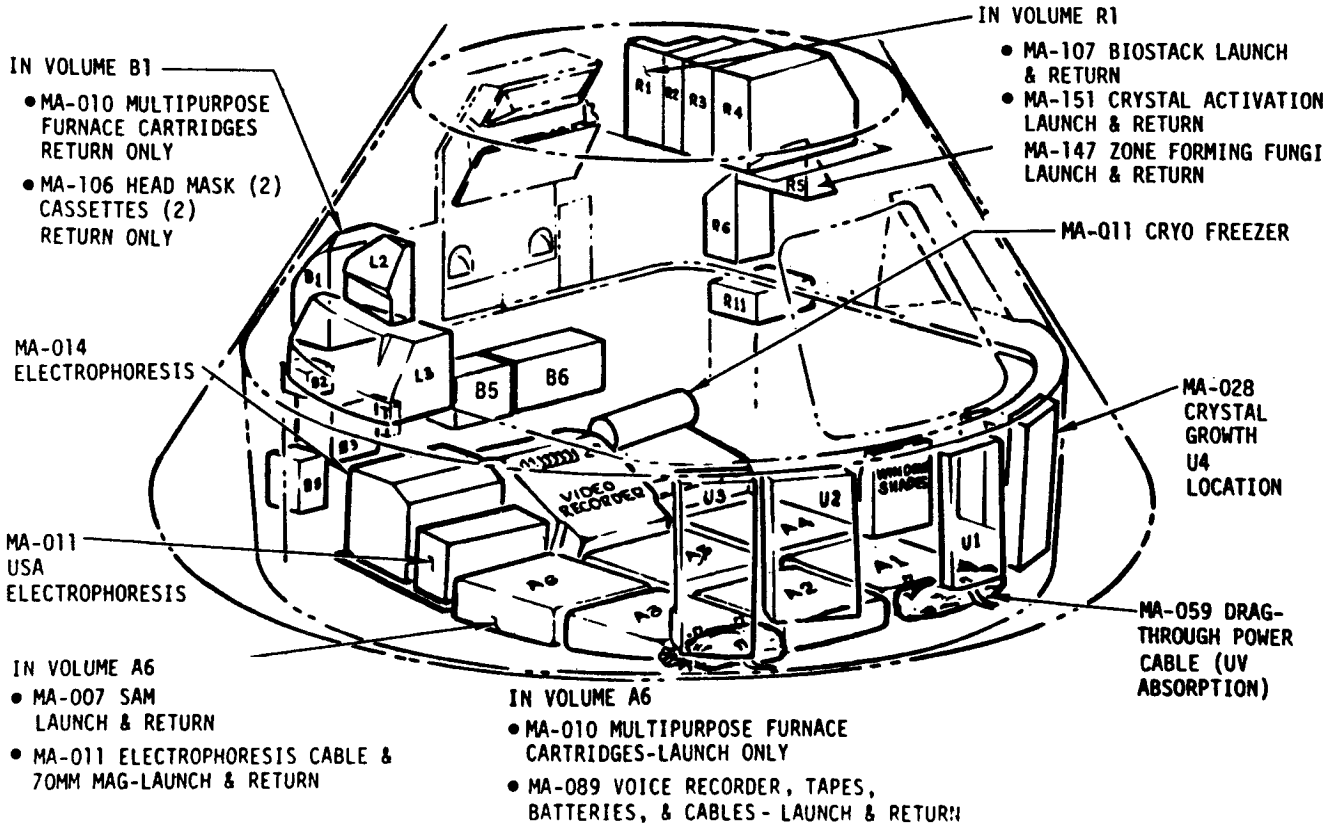

APOLLO SOYUZ COMMUNICATION OVERVIEW

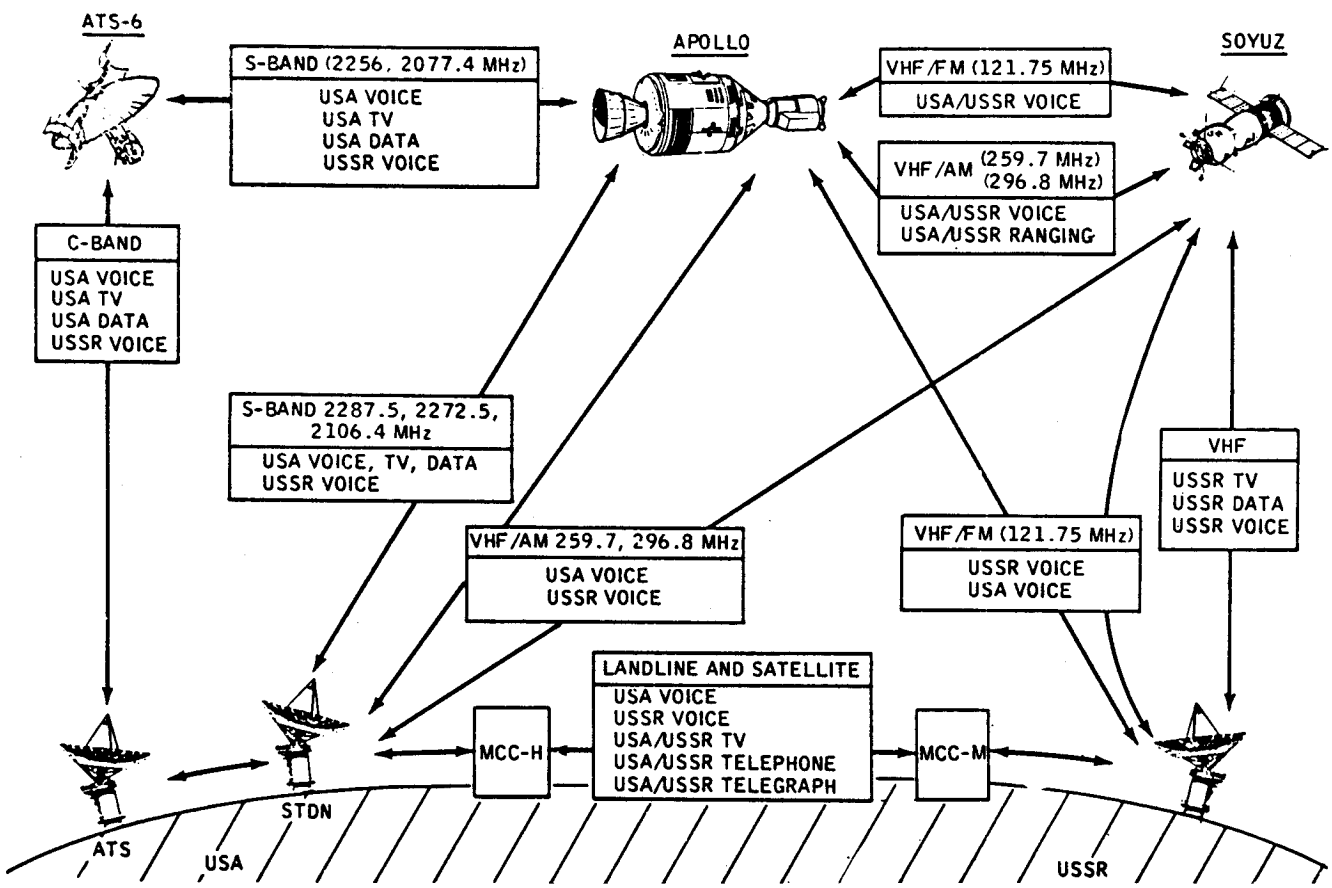

STDN SUPPORT FOR APOLLO-SOYUZ

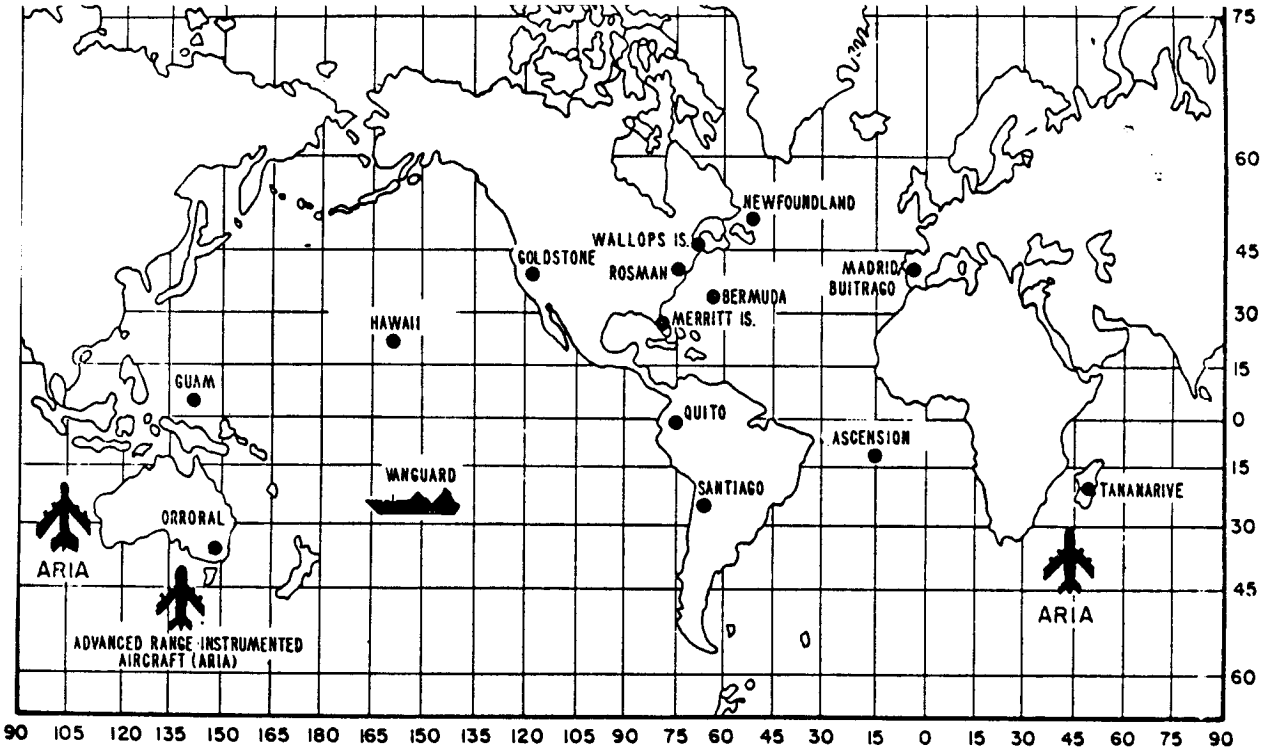

M-966-75-01

GROUND SUPPORT INSTRUMENTATION SUMMARY

STATION	TRACKING		TELEMETRY		COMMAND		A/G VOICE		TELEVISION	
	C-BAND	USB	VHF	USB	UHF	USB	VHF	USB	R/T	S-BAND RECORD
MIL		X	X	X	X	X	X	X	X	X
MLA	X									
NFL			X		X		X			
BDA	X	X	X	X	X	X	X	X		X
ACN		X		X		X	X	X		X
ASC	X									
HSK							X			
MAD		X	X	X	X	X[3]	X	X[3]	X[3]	X
TAN	X	X[1]		X		X		X		X
CRR		X[1]		X		X		X	X	X
GWM		X		X		X	X	X		X
CTN	X									
HAW		X	X	X	X	X	X	X		X
VAN			X	X	X	X	X	X		X
GDS		X		X		X	X	X	X	X
ROS		X[1]		X		X		X	X	X
AGO		X		X		X		X		X
QUI		X[1]		X		X		X		X
WLP	X[2]				X[2]					
ARIA			X	X			X	X		
KPT	X									
KMR	X									

LEGEND:
1 DOPPLER ONLY
2 RANGE SAFETY
3 ATS-6 INTERFACE

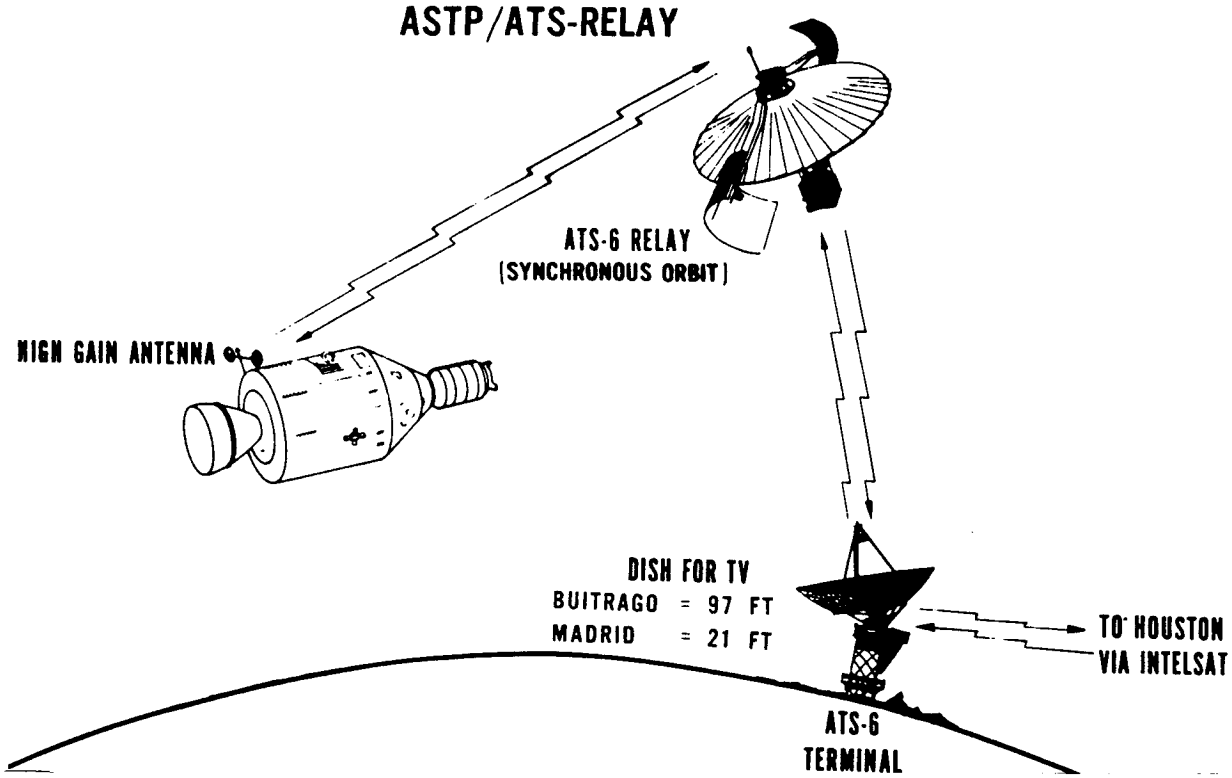

LAUNCH CONFIGURATION FOR APOLLO CSM AND DM

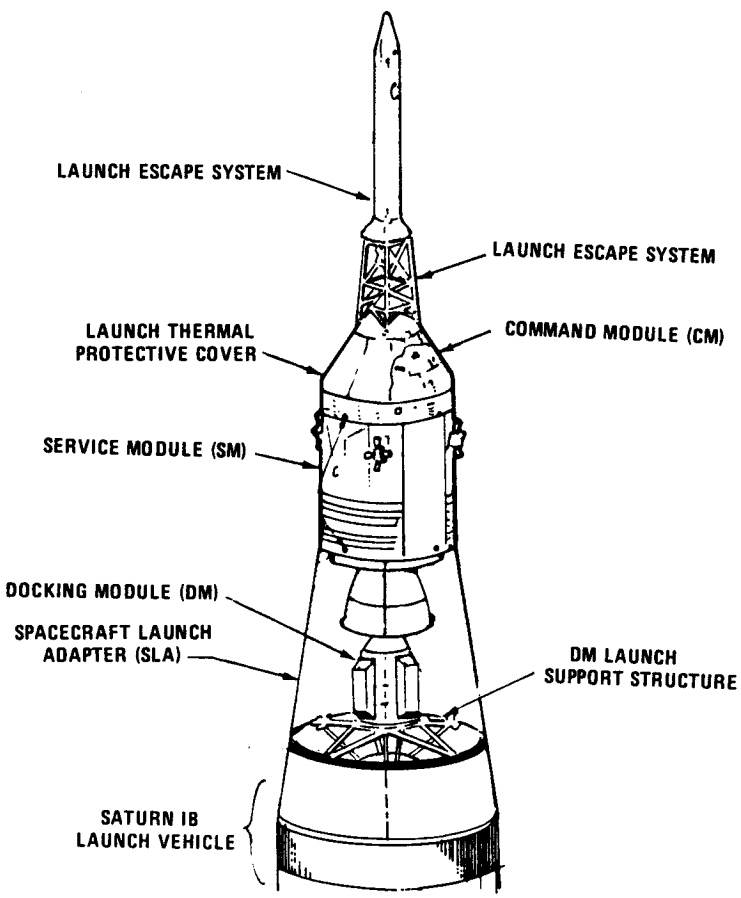

Fig. 1

NASA-S-74- 1553

MA-088 HELIUM GLOW

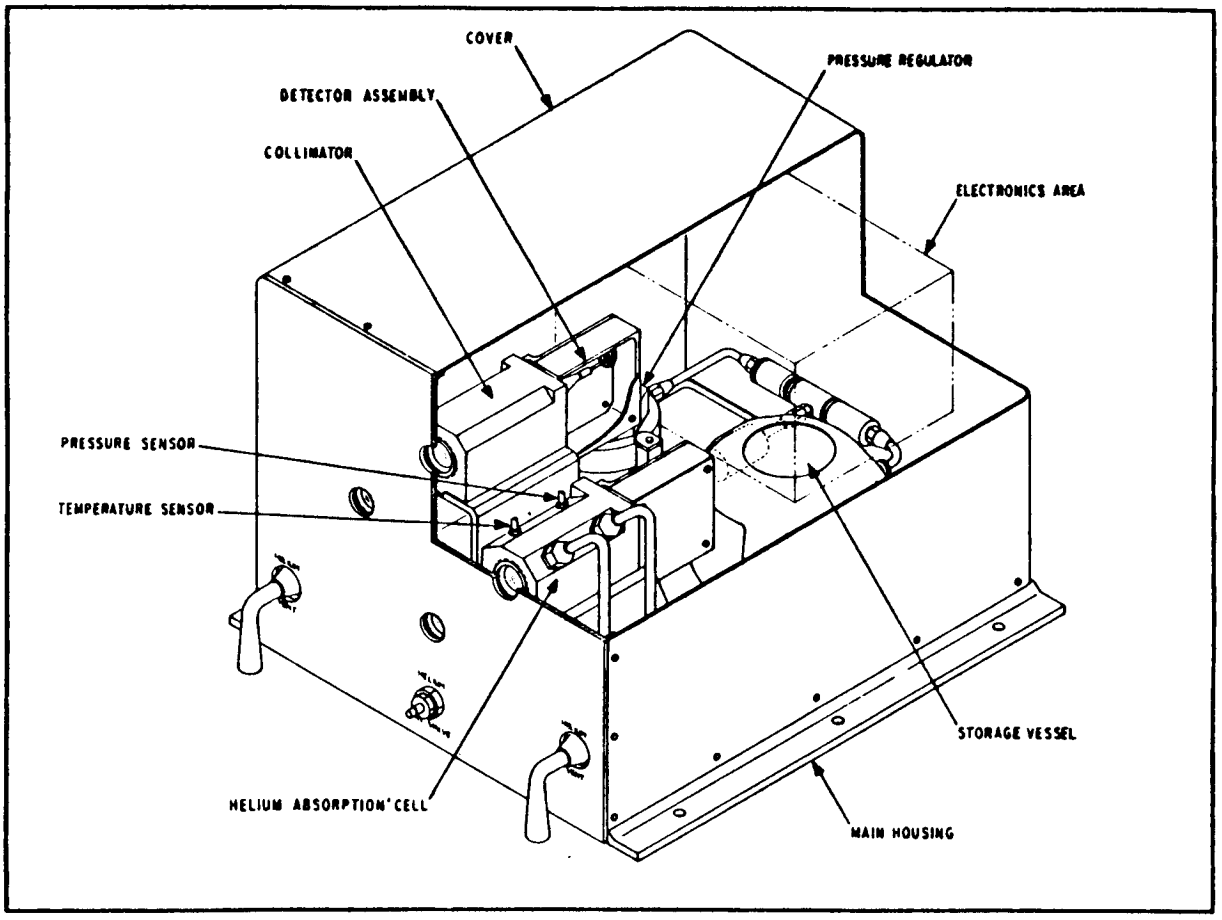

MA-083 EXTREME UV RADIATION

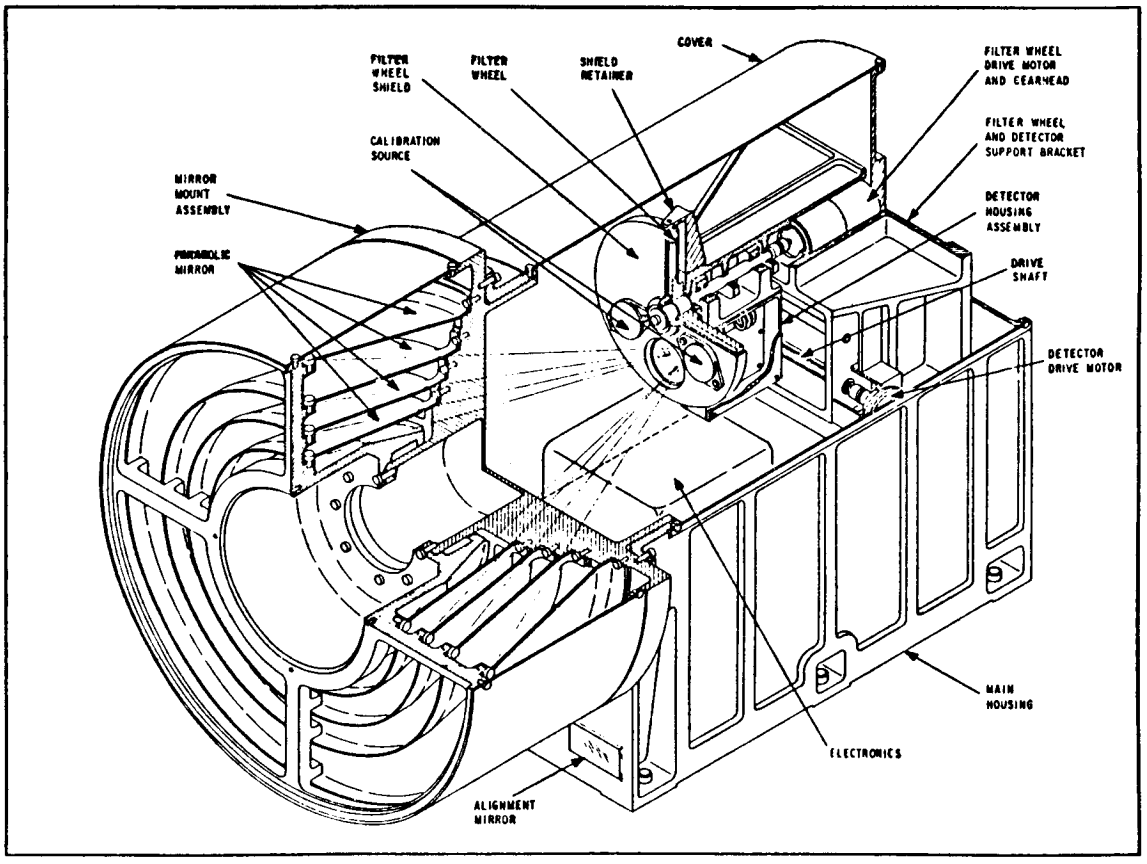

MA-048 SOFT X-RAY

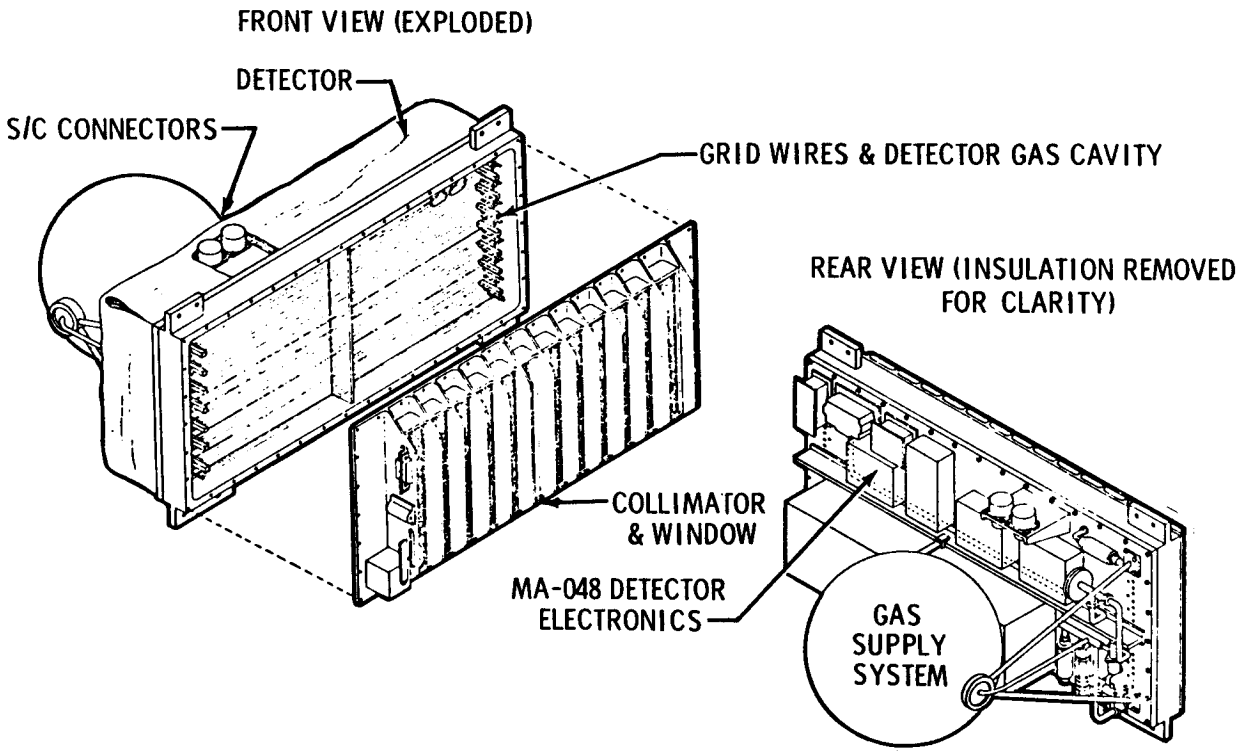

MA-106 LIGHT FLASH

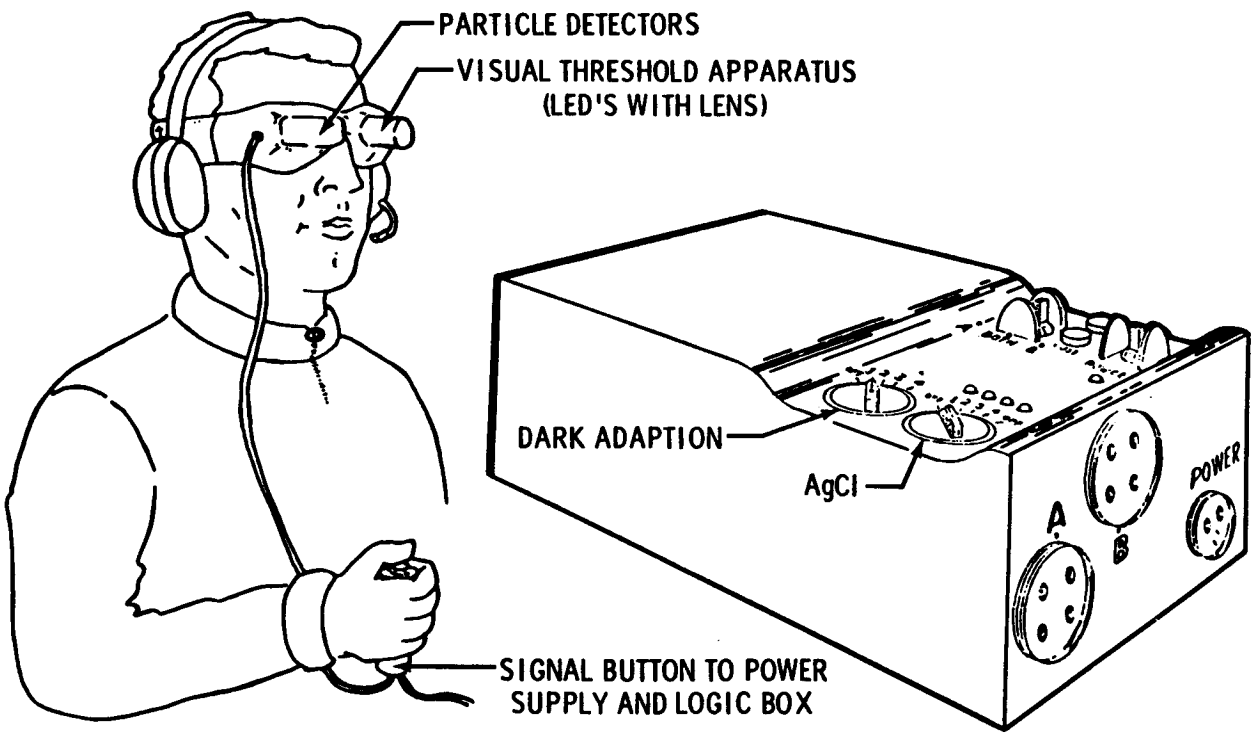

MASK WITH CREW SIGNAL BUTTON

POWER AND LOGIC BOX

MA-089 DOPPLER TRACKING

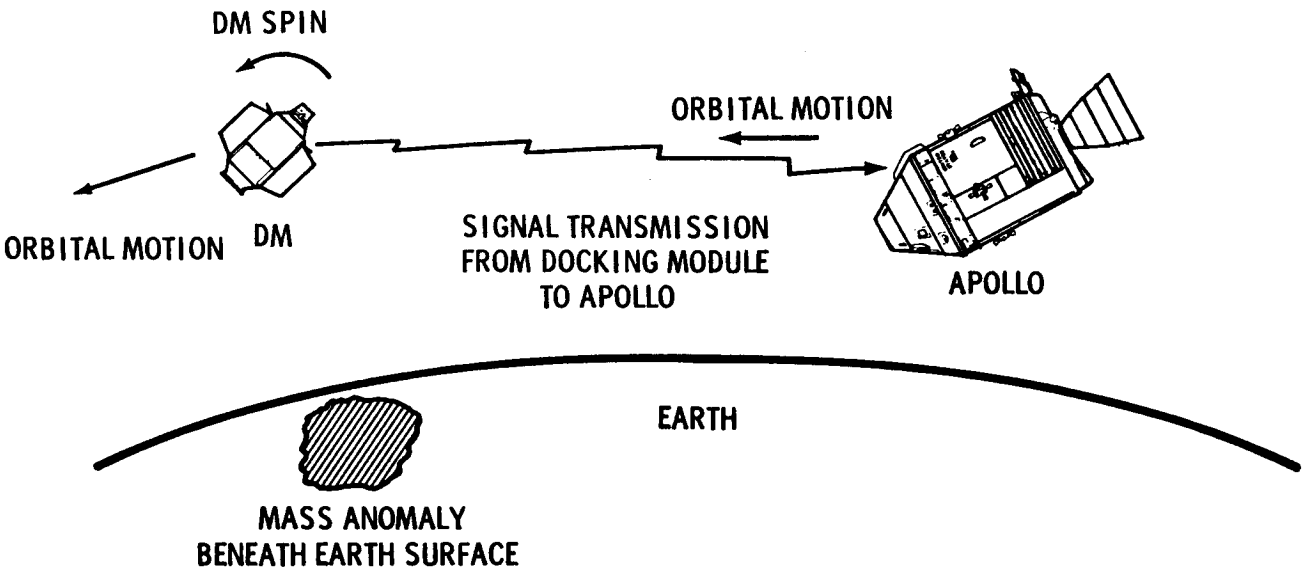

MA-128 GEODYNAMICS

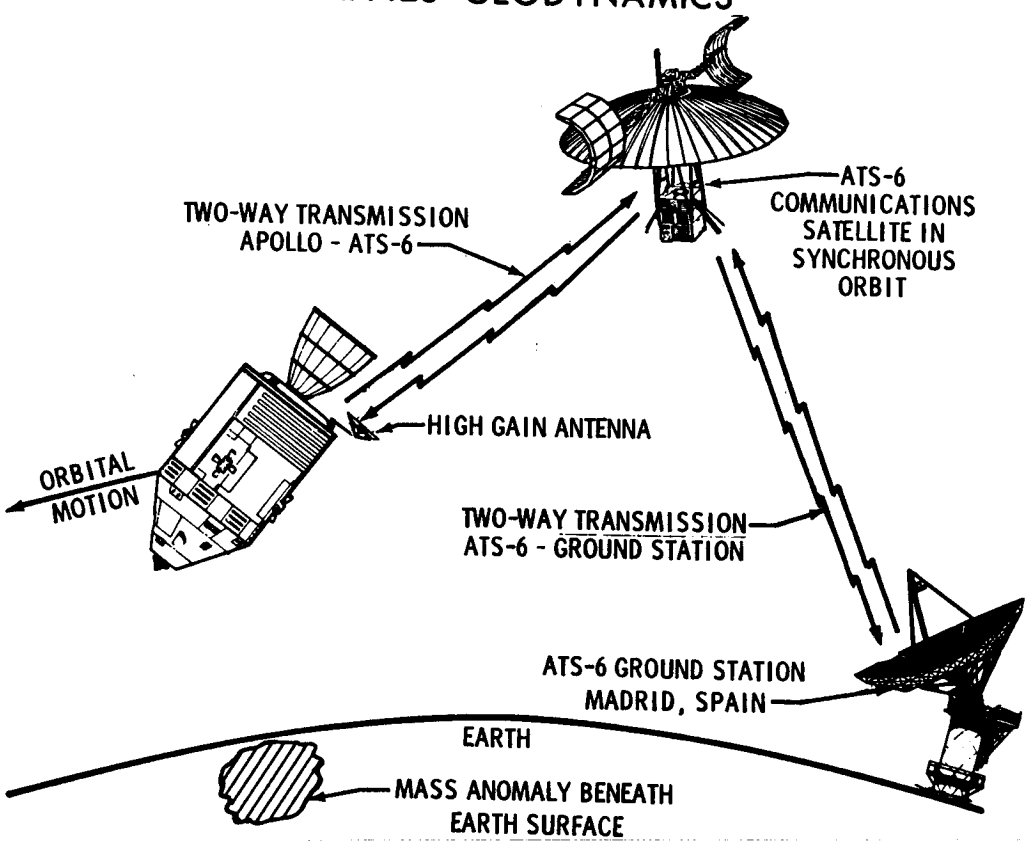

MA-059 UVA EXPERIMENT
SPACECRAFT ATMOSPHERE

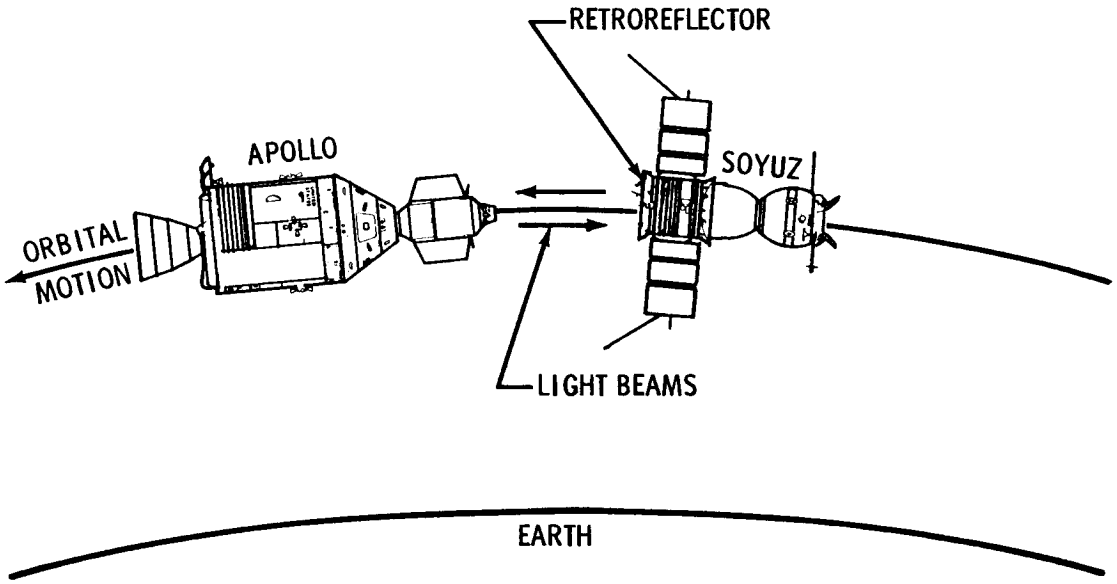

MA-059 UVA EXPERIMENT
EARTH ATMOSPHERE

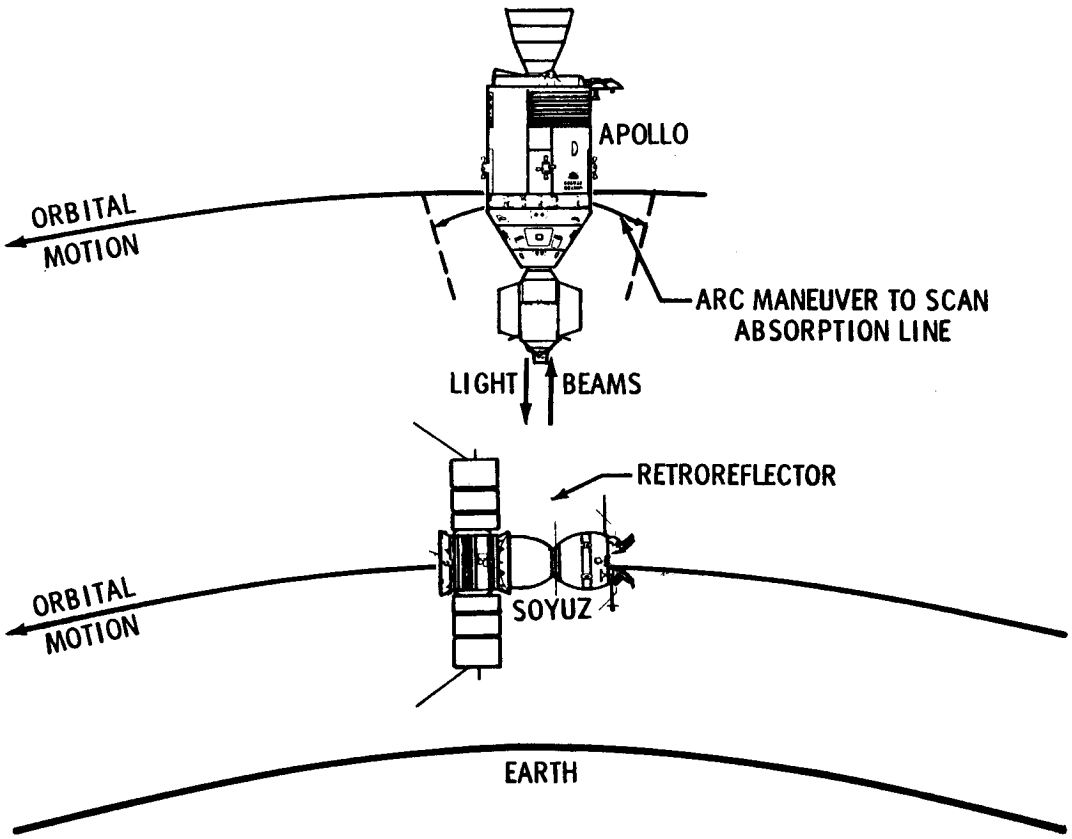

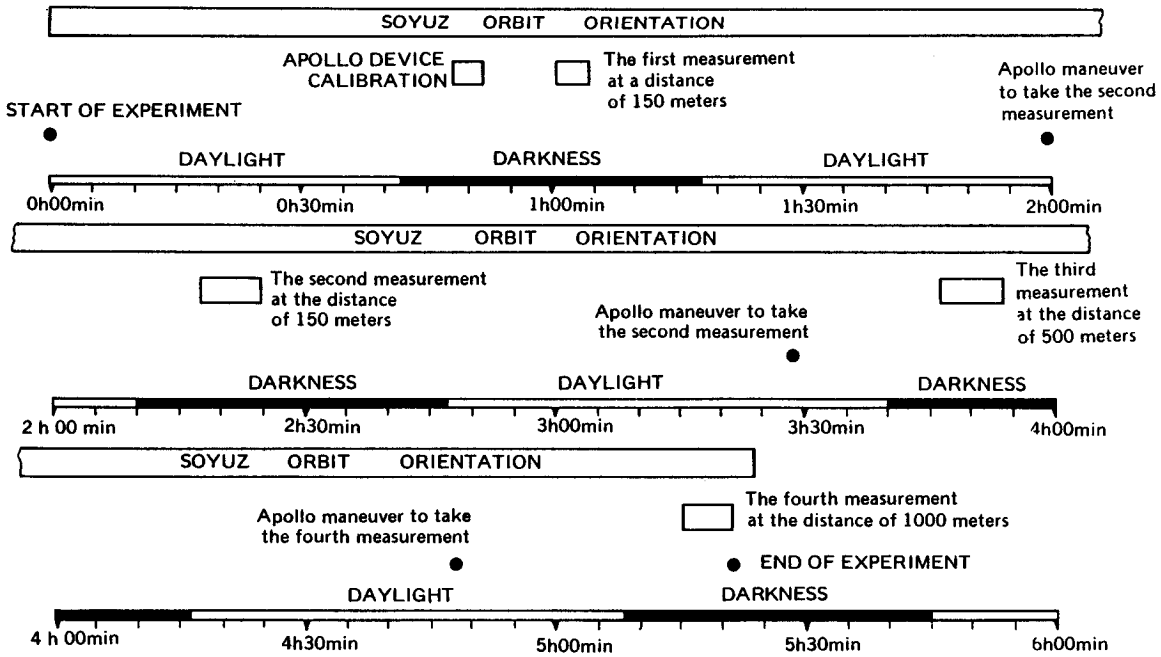

FIGURE 5.2 SCHEME FOR UV ABSORPTION EXPERIMENT

MA-007 SAM

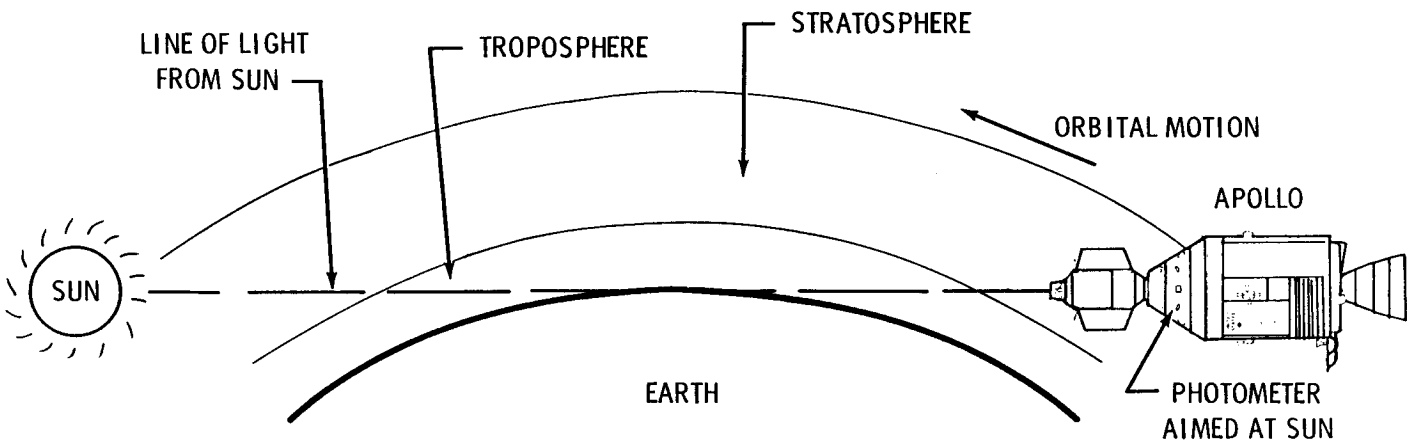

MA-148 ARTIFICIAL SOLAR ECLIPSE

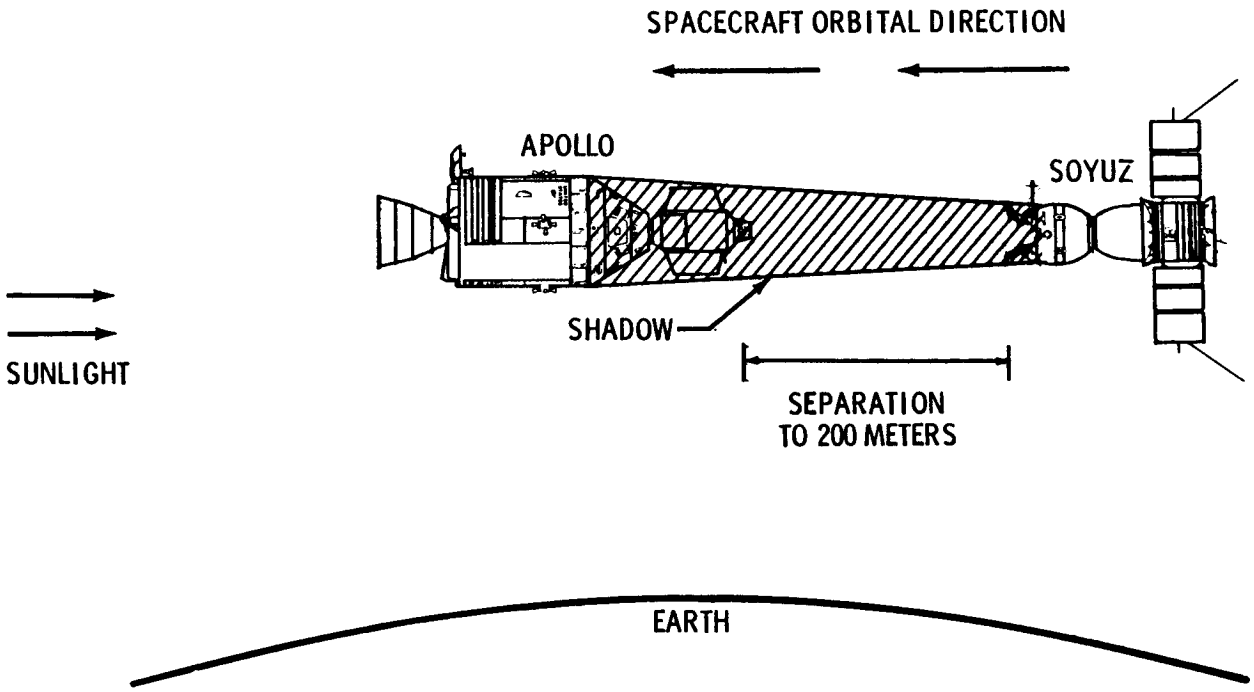

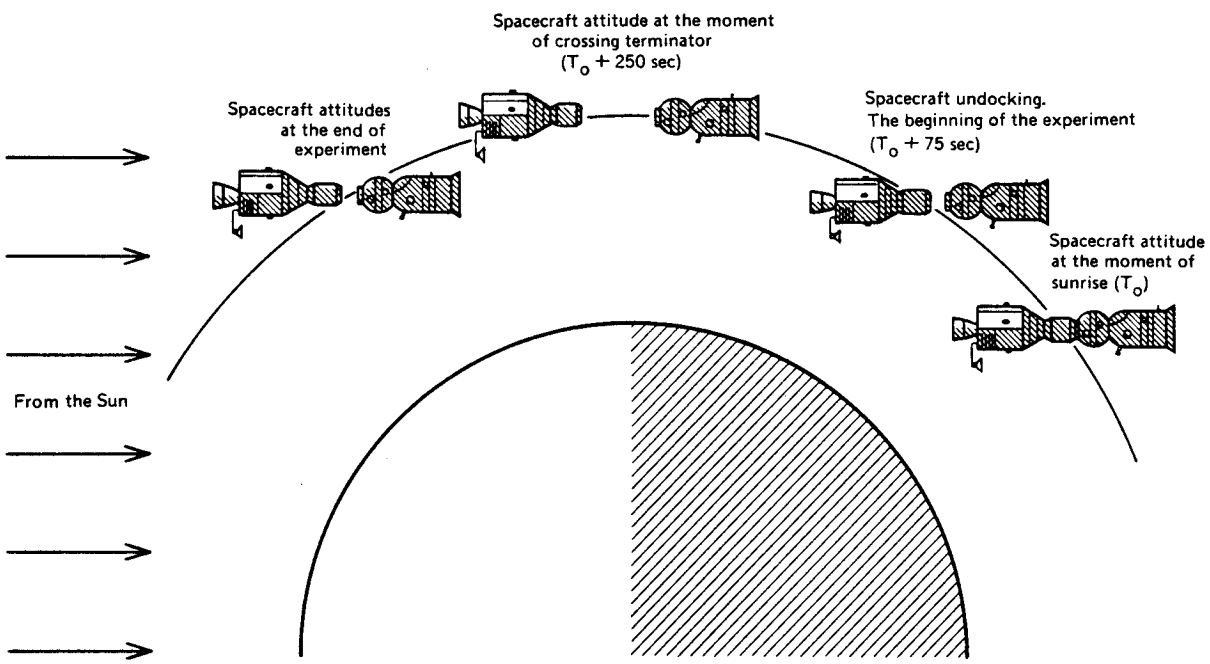

FIGURE 5.1 SOYUZ AND APOLLO ATTITUDES FOR "ARTIFICIAL SOLAR ECLIPSE EXPERIMENT"