NASA News

National Aeronautics and
Space Administration

Washington, D.C. 20546
AC 202 453-8400

ISY

For Release

David W. Garrett
Headquarters, Washington, D.C.
(Phone: 202/453-8400)

October 1, 1992

RELEASE: 92-160

ASTRONAUT JOHN YOUNG HONORED FOR 30 YEARS SERVICE

Astronaut John Young was awarded the NASA Outstanding Leadership Medal today by NASA Administrator Daniel S. Goldin in a ceremony at NASA Headquarters, Washington, D.C.

"Today we're here to honor one of NASA's finest and an authentic American hero if there ever was one," Goldin said. "John Young first became an astronaut 30 years ago - September 1962 - back in the days when we were still flying Mercury spacecraft. He had the right stuff back before we even had a name for it."

" His first flight in space was with Gus Grissom aboard the very first Gemini flight," Goldin continued. "Later he flew with Mike Collins on Gemini 10. In 1969, John made his first trip to the Moon aboard Apollo 10 and returned three years later to become part of the world's most elite fraternity: one of the 12 men to walk on the Moon."

"For most people, that would have been enough accomplishment for one lifetime. But not John. He waited almost a decade, then became the ultimate test pilot by taking the Space Shuttle for its first flight into space. In 1983, he set a new record as the first man to make 6 flights into space," Goldin said.

Young, 62, currently serves as Special Assistant to the Director of the Johnson Space Center, Houston, for Engineering, Operations and Safety. Prior to this assignment, he was Chief of the Astronaut Office from 1974 to 1987. During this period astronaut crews participated in the Apollo-Soyuz joint American-Russian docking mission, the Space Shuttle Approach and Landing Test program and 25 Space Shuttle flights.

In addition to the Outstanding Leadership Medal, Young is the recipient of the Space Congressional Medal of Honor, 3 NASA Distinguished Service medals and 70 other major awards. He also has been inducted into the National Aviation Hall of Fame.

-end-

92-161

NATIONAL AERONAUTICS AND SPACE ADMINISTRATION

HIGH RESOLUTION MICROWAVE SURVEY (HRMS)

PRESS KIT

OCTOBER 1992

PUBLIC AFFAIRS CONTACTS

NASA HEADQUARTERS, WASHINGTON, D.C.
Office of Space Science and Applications
Michael Braukus
(Phone: 202/358-1547)

Ames Research Center, Mountain View, Calif.
Michael Mewhinney
(Phone: 415/604-9000)

Jet Propulsion Laboratory, Pasadena, Calif.
Mary Hardin
(Phone: 818/354-5011)

CONTENTS

General Release....1
Media Services Information.... 3
Quick-Look Facts....4
Project History....5
Project Objectives....6
Targeted Search....7
Sky Survey....9
Signal Detection Plans....10
Project Management....11

RELEASE: 92-161

NASA TO BEGIN SEARCH FOR INHABITED PLANETS

On Oct. 12, NASA will begin the most comprehensive search ever conducted for evidence of intelligent life elsewhere in the universe.

The search will use telescopes and antennas to detect radio transmissions from other planetary systems. The search will commence 500 years after Columbus landed in North America.

"In the first few minutes, more searching will be accomplished than in all previous searches combined," according to Dr. John Billingham of NASA's Ames Research Center, Mountain View, Calif.

"Over the past few decades, " Billingham added, "scientific opinion has increasingly supported the theory that complex life may have evolved on planets orbiting other stars in the galaxy and the universe. In some cases, further evolution may have led to the emergence of intelligence, culture and technology."

Billingham, the program chief at Ames, said the High Resolution Microwave Survey (HRMS) consists of two parts -- a Targeted Search and a Sky Survey.

The Targeted Search will use the largest available radio telescopes around the world to search the frequency range from 1,000 to 3,000 megahertz, seeking a variety of patterns that may indicate the presence of an artificially generated signal. A megahertz is a unit of frequency equal to one million cycles per second.

The Targeted Search will perform the most sensitive search ever conducted of solar-type stars less than 100 light-years distant. The Targeted Search begins from the world's largest radio telescope at the National Astronomy and Ionosphere Center's Arecibo Observatory in Puerto Rico. It is operated for the National Science Foundation by Cornell University.

The Sky Survey will use the 34-meter antennas at NASA's Deep Space Network sites in the northern and southern hemispheres to scan the entire sky over the frequency range from 1,000 to 10,000 megahertz. The Sky Survey begins at the Goldstone, Calif., site.

"Because of the large increase in the area of sky and frequencies covered, a signal will have to be stronger to be detected by the Sky Survey," Billingham said. "But it could detect signals emitted in distant regions from directions that would be overlooked if the search were limited to nearby solar-type stars," he added.

- more -

Both elements of the HRMS are using specially developed digital signal processing systems capable of simultaneously analyzing tens of millions of radio frequency channels.

The HRMS is managed by NASA's Ames Research Center, which also is responsible for the Targeted Search project. The Jet Propulsion Laboratory, Pasadena, Calif., is responsible for the Sky Survey.

The HRMS is part of NASA's Toward Other Planetary Systems program in the Solar System Exploration Division, Office of Space Science and Applications at NASA Headquarters, Washington, D.C.

- end -

MEDIA SERVICES INFORMATION

NASA Select Television Transmission

There will be no live NASA Select coverage of the HRMS deployment on Oct. 12, 1992. Video footage of the HRMS deployment will be taken for documentary and archival purposes.

Media Coverage

Those interested in attending the initial deployment at Arecibo on Oct. 12, contact Michael Mewhinney at NASA Ames Research Center by calling 415/604-9000. Those wishing to attend the initial deployment at Goldstone, Calif., contact Mary Hardin at the Jet Propulsion Laboratory by calling 818/354-5011. Because of limited parking, use of private vehicles at both sites will be restricted. Buses will be available at both locations to transport reporters. Reporters must register at the press desks at either the Holiday Inn, Barstow, Calif., or the Dorado Beach Hotel, Dorado, Puerto Rico, for transportation and admission to the event. Reporters failing to register will be denied admission to the site.

Arecibo Press Room - Dorado Hyatt Hotel - 809/796-1234
Fax 809/796-2022

Goldstone Press Room - Holiday Inn - 619/256-5673

HRMS QUICK LOOK

Project Description: The High Resolution Microwave Survey (HRMS) operates under the aegis of the Toward Other Planetary Systems (TOPS) program in the Solar System Exploration Division at NASA Headquarters. The TOPS program will employ a variety of astronomical techniques, including microwave surveys, to search for planets around other stars. The HRMS' Targeted Search and the Sky Survey will begin concurrently at Arecibo, Puerto Rico, and Goldstone, Calif. The project's initiation is called the "Initial Deployment of the NASA High Resolution Microwave Survey."

Initial Deployment Date/Sites: Oct. 12, 1992 - The National Astronomy and Ionosphere Center's 305-meter (1,000-foot diameter) radio telescope near Arecibo, Puerto Rico, will be used for the Targeted Search. This telescope is operated for the National Science Foundation by Cornell University. The new 34-meter (112-foot diameter) antenna at NASA's Goldstone Deep Space Communications Complex near Barstow, Calif., will be used for the Sky Survey.

Time of Deployment: Targeted Search at 3 p.m. EDT, Arecibo, Puerto Rico; Sky Survey at noon PDT, Goldstone, Calif.

Project Duration: Expected to last until about 2001.

PROJECT HISTORY

The Earth is the only location known to harbor life. But as knowledge of the nature of life has grown, so too have estimates of the likelihood of life beyond Earth. Some locations can be searched directly for signs of life, as Mars was by the Viking Project of the mid-1970s. There are billions of other locations outside this solar system that cannot be searched directly because of the enormous distances involved.

In 1959, it was first proposed that a method existed to accomplish an indirect search for life by the use of radio astronomy techniques to detect signals that might be produced on other planetary systems. Such signals would provide unique evidence of the existence of intelligent life elsewhere in the universe.

In 1972, a National Academy of Sciences report on astronomy and astrophysics stated that "a project with the goal of detection of intelligent life elsewhere may, in the long run, be one of science's most important and most profound contributions to mankind and to our civilization." Also in 1972, NASA published its first report describing how NASA-developed technology could make such a search possible.

In the years between 1972 and 1988, NASA maintained a low-level research and development activity that resulted in the initiation of the Search for Extraterrestrial Intelligence Microwave Observing Project (MOP) in FY 1989.

In 1992, NASA established the High Resolution Microwave Survey (HRMS) as part of the Toward Other Planetary Systems (TOPS) program within NASA's Solar System Exploration Division. The HRMS, making full use of instruments previously built for the MOP, will be capable of detecting radio signals emanating from habitable planets.

The HRMS will be initiated on Oct. 12, 1992, in two concurrent phases, the Targeted Search, managed by NASA's Ames Research Center, Mountain View, Calif., and the Sky Survey, managed by the Jet Propulsion Laboratory, Pasadena, Calif.

The Targeted Search (focusing with a very high degree of sensitivity on 1,000 nearby stars similar to the sun) will begin observations at 3 p.m. EDT using the National Science Foundation's National Astronomy and Ionosphere Center's 305-meter telescope near Arecibo, Puerto Rico.

The Sky Survey (scanning the entire sky for strong signals coming from any direction) will begin observations at noon PDT using a 34-meter antenna at NASA's Goldstone Deep Space Communications Complex near Barstow, Calif.

PROJECT OBJECTIVES

The detection and characterization of planetary systems around other stars is the goal of NASA's Toward Other Planetary Systems (TOPS) program. Earth's solar system is still the only known example of a planetary system, and Earth is the only known planet that sustains life. Recent astrophysical observations suggest the existence of other planetary systems around distant stars. The existence of these systems could support the hypothesis that life may exist beyond Earth in another solar system.

Beginning in fiscal year 1993, NASA's Solar System Exploration Division will expand its TOPS program to include a new project called the High Resolution Microwave Survey (HRMS). The project will observe the microwave region of the electromagnetic spectrum in a manner that can detect signals produced by a distant technology.

Potentially, there are billions of solar systems in the Milky Way galaxy at tremendous distances from Earth. There are billions of locations outside Earth's solar system that may contain life but cannot be searched by robotic spacecraft. By providing a means of locating and studying distant planetary systems for evidence of technology generated by life in those systems, the addition of HRMS to TOPS will expand and enhance this search for evidence of life.

The TOPS program originally was designed to be fully responsive to the document "Strategy for the Detection and Study of Other Planetary Systems and Extrasolar Material: 1990-2000," issued in 1990 by the Space Studies Board's Committee on Planetary and Lunar Exploration. In the same year, the Space Studies Board's Committee on Planetary Biology and Chemical Evolution recommended the following four objectives in its report entitled "Search for Life's Origin":

1) To determine the frequency and morphology of nearby planetary systems.

2) To determine the frequency of occurrence of conditions suitable to the origin of life.

3) To search for presumptive evidence of life in other planetary systems.

4) To search for evidence of extraterrestrial technology.

With the incorporation of the HRMS, the TOPS program will address each of these objectives and provide for an expanded comparative study of the universe.

TARGETED SEARCH

Scientists at NASA's Ames Research Center will conduct the Targeted Search portion of the HRMS.

The Targeted Search will examine 1,000 nearby solar-type stars within 100 light years distance from Earth (one light year is approximately 5.9 trillion miles). The objective is to test the hypothesis that extraterrestrial technologies are transmitting radio signals whose characteristics are greatly different from natural sources of radio emissions and that HRMS radio telescopes are sensitive enough to detect them. Some stellar clusters and nearby galaxies also will be observed. The frequency range covered will be 1,000 to 3,000 megahertz (MHz).

Scientists believe that electromagnetic radiation is the most efficient means for accomplishing information transfer over interstellar distances. All electromagnetic waves travel at the speed of light, but radio waves use lower energy photons than light or other radiation and are not absorbed by the interstellar medium.

Of all possible electromagnetic frequencies, the radio portion of the spectrum suffers least from natural background noise. Microwave radio frequencies between about 1,000 and 10,000 megahertz allow detection of the weakest signals because the background noise, due to our galaxy and the Earth's atmosphere, is least.

To achieve the highest possible sensitivity, the largest available radio telescopes will be used to conduct the Targeted Search. The number of targets covered will be much larger than previous searches, and the range of frequencies covered will be thousands of times greater than all previous searches combined.

To accomplish this, specialized digital signal processing equipment has been constructed to listen for microwave radio transmissions reaching the Earth from distant planetary systems.

The specialized digital signal processing equipment will simultaneously study the radio spectrum over tens of millions of individual frequency channels, at spectral resolutions ranging from 1, 2, 4, 7, 14 and 28 hertz (cycles per second). The equipment can automatically detect continuous carrier waves or narrow band (limited range of frequencies) pulses whether they remain constant in frequency or drift slowly because of some relative acceleration between transmitter and receiver. Low noise feeds and cryogenically cooled receivers will provide access to all frequencies between 1,000 and 3,000 megahertz.

A special wide frequency bandwidth Multi Channel Spectrum Analyzer (MCSA) and real-time pattern recognition systems will be deployed at radio astronomy observatories with the largest existing antennas. The MCSA is a spectroscope that dissects the incoming radio signal into a large number of very fine resolution frequency channels. When combined with the NASA signal detectors built for the project, the system also is capable of detecting continuous wave signals as well as narrow band pulses, a likely form of interstellar transmission. An automatic data

analysis subsystem will be used to detect the presence of fixed frequency or drifting continuous wave (CW) signals or sequences of regularly spaced pulses.

The Targeted Search will use the National Science Foundation's National Astronomy and Ionosphere Center's 305-meter (1,000-ft) diameter radio telescope located at the Arecibo Observatory near Arecibo, Puerto Rico, for the initial deployment of the HRMS on Oct. 12, 1992. The system will have a total of 10 megahertz of bandwidth. It will simultaneously analyze tens of millions of channels of spectral data at 1, 2, 4, 7, 14 and 28 hertz resolutions. The system will be transported to other large radio telescopes around the world in a systematic fashion over the 10-year period of the search. This will ensure that all target stars have been fully covered.

In 1995, the National Radio Astronomy Observatory's (NRAO) 140-foot telescope in Green Bank, W. Va., will become a dedicated facility for the HRMS, permitting very large observations of each target at each frequency. It will serve as the logistical hub of the HRMS Targeted Search. Over the next 3 years, three more such systems will be built and packaged into two mobile research facility trailers for air transport to the observation sites.

SKY SURVEY

The NASA Jet Propulsion Laboratory, Pasadena, Calif., will conduct the Sky Survey portion of NASA's HRMS to search for radio signals from other planetary systems. The Sky Survey will scan all directions of the sky to cover a wide range of frequencies from 1,000 to 10,000 megahertz.

NASA's HRMS will conduct a comprehensive, systematic search of a portion of the microwave radio spectrum to detect evidence of radio transmissions from other planetary systems. An intentionally transmitted signal is easiest to detect in a frequency band where the background radio noise or static is minimal. One of the quietest frequency bands is the "microwave window," which lies between 1,000 and 10,000 megahertz. Since the quiet characteristic of microwave frequencies does not change throughout the galaxy, it is reasonable to assume that others might also choose this band.

The Sky Survey observation technique involves automatically mapping small areas of the sky, called sky frames. As the observations are completed, the sky frames will be assembled to form mosaic maps, one for each frequency band, of all the microwave detections over the entire sky. For each of 31 frequency bands, the sky is divided into several hundred frames, as if the sky were a giant checkerboard. Each frame takes 1 to 2 hours to map.

The Sky Survey will initially use the 34-meter (112-foot) diameter antenna at the Goldstone Deep Space Communications Complex of NASA's Deep Space Network in California's Mojave Desert. Toward the latter part of the survey, the search will move to a similar antenna near Canberra, Australia.

In 1992, the Sky Survey will begin with a prototype system. The prototype receiver, spectrum analyzer and signal processor will break up incoming microwave radio signals into 2 million separate frequency channels. The system can be configured in a single polarization mode with 40 megahertz total bandwidth or a dual polarization mode with 20 megahertz total bandwidth. Specially designed digital hardware, operating at supercomputer speeds, will simultaneously process the 2 million channels to identify and separate interstellar signals that have "artificial" characteristics from background radio noise and terrestrial interference, such as Earth-orbiting satellites. The most promising candidate signals will be subjected to detailed screening and will be saved for subsequent verification and study by the scientific community.

The prototype will be used to test and verify the design of the Sky Survey control and data processing algorithms. The operational Sky Survey system currently is being designed and constructed. It will provide 16 times the capability of the prototype and will feature a 32 million channel spectrum analyzer with a bandwidth of at least 320 megahertz. Starting in 1996, the system will begin to map the entire sky 31 times in both the northern and southern hemispheres during an observational phase that is expected to last 6 years and produce more than 25,000 sky frames.

SIGNAL DETECTION PLANS

In the event that a signal is detected from another planetary system, a formal verification procedure will be implemented. The procedure stipulates that before any public announcement is made, the signal detection must be independently confirmed by other observers or research organizations.

After the discovery has been verified, national and international authorities are to be informed. News of the confirmed discovery then will be disseminated promptly, openly and widely through scientific channels and the news media. All data necessary for the confirmation of the detection will be made available to the international scientific community through publications, meetings, conferences and other appropriate means.

No response to any confirmed signal will be sent from Earth until appropriate international consultations have occurred.

PROJECT MANAGEMENT

NASA Headquarters, Washington, D.C.

Dr. Wesley Huntress	Director, Solar System Exploration Division
Dr. Gary R. Coulter	HRMS Program Manager
Dr. John D. Rummel	HRMS Program Scientist
Dr. Jurgen Rahe	TOPS Program Scientist

Ames Research Center, Mountain View, Calif.

Dr. Dale L. Compton	Director
Victor L. Peterson	Deputy Director
Dr. Joseph C. Sharp	Director of Space Research
Dr. John Billingham	Chief, Program Office
Dr. Bernard M. Oliver	Deputy Chief, SETI Office
David Brocker	HRMS Project Manager
Dr. Jill Tarter	HRMS Project Scientist
Larry D. Webster	HRMS Targeted Search Manager

Jet Propulsion Laboratory, Pasadena, Calif.

Dr. Edward C. Stone	Director
Larry N. Dumas	Deputy Director
Norman R. Haynes	Assistant Laboratory Director, Office of Telecommunications and Data Acquisition
Dr. Nicholas Renzetti	Manager, Telecommunications and Data Acquisition Science Complex, Goldstone Deep Space Communications Complex
Dr. Michael J. Klein	JPL SETI Project Manager and HRMS Sky Survey Manager
Dr. Samual Gulkis	HRMS Deputy Project Scientist
J. Richard Kolden	HRMS Sky Survey Implementation Manager

Arecibo Observatory, Puerto Rico

Dr. Daniel Altschuler	Director

NASA News

National Aeronautics and
Space Administration

Washington, D.C. 20546
AC 202 453-8400

ISY

Bill Livingstone
Headquarters, Washington, D.C.
(Phone: 202/453-1898)

For Release
October 1, 1992

RELEASE: 92-162

GOLDIN RECEIVES SMALL DISADVANTAGED BUSINESS AWARD

NASA Administrator Daniel S. Goldin today was presented the Meritorious Award of the National Association of Small Disadvantaged Business.

"He's now won this award twice for opening up his organizations to minority businesses -- once at TRW and now at his present role as Administrator of NASA", said Senator John C. Danforth (R-Mo.) who presented the award on behalf of the association.

"I think it's a tremendous accomplishment to win this award once, to win it twice is absolutely fantasitic and it shows a real commitment by Dan Goldin to something that is admirable, that is making business opportunities available to all Americans," Danforth said.

According to Henry T. Wilfong, Jr., President of the national association, Goldin is the first repeat recipient of the Meritorious Award.

"We intend that this award be only for accomplishments that are of truly meritorious dimensions. TRW Space & Technology Group accomplished such deeds the time you served as Chief Executive Officer," Wilfong said.

"While we consider your performance at TRW to have been worthy of recognition, we feel your performance to date at NASA indicates that your performance as Administrator will be of even more note and benefit to minority firms throughout America," Wilfong said.

In accepting the award, Goldin said, "This recognition is not for me but , I believe, for NASA. NASA is commited to bringing the cultural diversity of America into the workforce. I'm accepting this award on behalf of NASA."

-more-

NASA Minority Goals

Among the steps that Goldin has taken to make NASA's small and disadvantaged business program the "best in the country", include:

o Establish a NASA Minority Business Resource Advisory Committee to help identify more businesses that should be part of the NASA family;

o Establish firm percentages for small and disadvantaged business subcontracting as part of our prime contracts;

o Make use of small and disadvantaged business subcontracting as an important evaluation factor in every source selection and;

o Reward prime contractors with special award fees when they exceed their subcontracting goals by certain percentages.

-end-

NASA News

National Aeronautics and
Space Administration

Washington, D.C. 20546
AC 202 453-8400

ISY

For Release

Paula Cleggett-Haleim
Headquarters, Washington, D.C.
(Phone: 202/350-1547)

October 2, 1992

Jim Elliot
Goddard Space Flight Center, Greenbelt, Md.
(Phone: 301/286-6256)

Ray Villard
Space Telescope Science Institute, Baltimore, Md.
(Phone: 410/338-4514)

RELEASE: 92-163

NASA'S HUBBLE TELESCOPE EXPLORES JUPITER'S VOLCANIC MOON IO

Extended observations by the Hubble Space Telescope indicate that Jupiter's moon Io has a smaller atmosphere than previously thought with very dense regions possibly over volcanoes and surface frost, NASA announced today.

The observations also show that despite continual volcanic activity, Io's surface has remained largely unchanged since first photographed by the Voyager spacecraft when it flew past the moon in 1979.

The Hubble observations mark the first time astronomers have been able to directly gauge the size of Io's tenuous atmosphere. Sulfur and oxygen emissions from the atmosphere indicate that it is at least three times smaller than previously thought -- 1.5 Io diameters across instead of the previous upper limit value of 5 Io diameters.

These observations show that the atmosphere may be patchy, with very dense regions having 1000 times higher pressure than adjoining, low-density regions. Likely sources for the atmospheric gas are sulfur dioxide from the volcanoes, evaporation of surface frost in sunlit areas or material knocked out of the surface ("sputtered") into the atmosphere. The observations also confirm that the surface contains sulfur dioxide frost.

- more -

Hubble's observations reveal a new oxygen emission never before detected from the torus, a giant ring of high-temperature gas encircling Jupiter. From these measurements, the density and the amount of oxygen relative to sulfur in the torus have been determined. Oxygen is the most abundant component of the torus with about twice as much concentration as sulfur.

Moon's Effects On Jupiter

Though no larger than Earth's Moon, Io affects the immense planet Jupiter on a grand scale. Io's atmosphere feeds material to the torus encircling Jupiter at Io's distance. Understanding Io's atmosphere is essential to understanding the plasma torus, which in turn affects Jupiter's immense magnetosphere and aurorae.

Sulfur from the volcanic plumes cannot escape directly into space to fuel the plasma torus. Instead, sulfur and oxygen might be stripped from Io's atmosphere in a complicated interaction between the atmosphere and the plasma torus.

Observations of Io's atmosphere were made with Hubble's Faint Object Spectrograph (FOS) by Melissa McGrath of the Space Telescope Science Institute (STScI), Baltimore; John Clarke, University of Michigan and Darrell Strobel, Gilda Ballester, Warren Moos and Paul Feldman of The Johns Hopkins University, Baltimore.

Io images were taken by Francesco Paresce, European Space Agency/STScI; Paola Sartoretti, University of Padova and co-investigators with the Faint Object Camera (FOC). Additional images were taken by amateur astronomer Jim Secosky with Hubble's Wide Field/Planetary Camera (WFPC).

Earlier space probes revealed that Io has surface sulfur dioxide frost appearing as bright white patches in visible images and that Io has a very tenuous atmosphere, composed primarily of sulfur dioxide, with a surface pressure 1 billionth that of Earth's atmosphere.

Scientific progress on understanding Io has been slow since the 1979 Voyager observations. Io is so small and one-half billion miles from Earth, preventing ground-based telescopes from distinguishing Io's surface features.

Because Io's atmosphere is primarily sulfur dioxide, atmospheric studies can be undertaken best at ultraviolet wavelengths. These wavelengths cannot penetrate Earth's atmosphere for studies by ground-based telescopes.

Io's Surface Unchanged Despite Volcanism

To look for possible surface changes, researchers compared FOC visible-light images to a "synthetic" Voyager image modified to match Hubble's resolution. The astronomers concluded that Io's trailing hemisphere, known to be more geologically active, has not changed noticeably in the 13 years between Voyager and Hubble observations.

Detailed analysis of the images is still being carried out to search for less obvious changes. Two small areas roughly 200 miles across seem to have undergone slight change.

This lack of large-scale change is mysterious because Io's volcanism should resurface the moon at a rate of a few inches per year. One possibility is that there is a constant equilibrium between volcanic eruptions and unknown processes which might remove or cover volcanic debris. This would preserve the general appearance of Io's surface over long periods.

Io's surface looks remarkably different in ultraviolet (UV) light. Regions which look bright in visible light are dark in UV. The most likely explanation is that large areas of Io are covered with a sulfur dioxide frost. Because sulfur dioxide is a strong absorber of UV radiation, sulfur dioxide-rich areas are dark in the UV and bright in visible light.

Dr. Paresce points out that there also are regions that are bright or dark in images taken at both wavelengths. This suggests that the size of sulfur dioxide grains also may play a role in brightness. The reflectivity of sulfur dioxide is very sensitive to the grain size at ultraviolet wavelengths.

Amateur astronomer Jim Secosky made near-infrared images (7100 Angstroms) of Io which complement the FOC images by providing new constraints on Io's surface composition. Some models predict the presence of basalts and polysulfur oxide on the surface. But these dark compounds do not show up in Hubble's longer wavelength images. This further supports the model for Io's surface being predominantly sulfur and sulfur dioxide.

Secosky took HST snapshots of Io emerging from Jupiter's shadow to look for evidence of frost evaporation which might have formed on Io while it was chilled behind Jupiter. This would have been evident if Io was 10 percent brighter than while emerging from eclipse.

Secosky did not see any evidence of the "post-eclipse brightening" phenomena which have been reported occasionally by ground-based observers since 1964. Secosky thinks his negative results mean that the post-eclipse brightening effect, if real, may be driven by sporadic volcanic activity.

The researchers continue developing models of Io's complex surface structure and composition to account for Hubble's imaging and simultaneous spectroscopic observations. Because Io is the solar system's most dynamic and evolving moon, Hubble will continue to be used for detecting changes in Io's atmosphere and on its surface.

- end -

Editors Note: Photographs and a video, "HST Studies Jovian Moon Io," are available to media representatives by calling 202/453-8373.

HST Single Image	HST Comparison Images
Color: 92-HC-671	92-HC-672
B&W: 92-H-726	92-H-727

NASA News

National Aeronautics and
Space Administration

Washington, D.C. 20546
AC 202 453-8400

ISY

Paula Cleggett-Haleim
Headquarters, Washington, D.C.
(Phone: 202/358-1547)

For Release
October 5, 1992

EDITORS NOTE: 92-87

HUBBLE, EXTREME ULTRAVIOLET EXPLORER MEDIA BRIEFING, OCT. 8

A striking, Hubble photograph of "cosmic mirror images" and an image of a powerful object 2 billion light-years outside our galaxy will be the subject of a media briefing, Thursday, Oct. 8, 1992, at 1 p.m. EST. The briefing will be held in the NASA Headquarters auditorium, 400 Maryland Ave., S.W., Washington, D.C.

The Hubble observations provide new information on distant galaxies and on the distribution of mysterious dark matter, whose nature remains unknown.

The Extreme Ultraviolet Explorer image is providing new information in one of the last uncharted "windows" visible to instruments only above the Earth's atmosphere.

The briefing will feature Dr. Richard Ellis of the University of Durham, in England, U.K.; Dr. Bruce Margon, University of Washington, Seattle; Dr. Daniel Weedman, Pennsylvania State University, University Park, and Dr. Steve Maran, NASA/Goddard Space Flight Center, Greenbelt, Md. Included will be a videotape of Prof. Stuart Bowyer, University of California, Berkeley.

This event will be carried live on NASA Select television, Satcom F-2R, Transponder 13, located at 72 degrees West Longitude, frequency 3960.0 MHz, audio 6.8 MHz. Questions will be taken from NASA centers.

The new images and a videotape on gravitational lensing animation will be available to media representatives through NASA's Broadcast and Imaging Branch at 202/453-8375 on Thursday, Oct. 8, 1992.

- end -

NASA News

National Aeronautics and
Space Administration

Washington, D.C. 20546
AC 202 453-8400

ISY

Paula Cleggett-Haleim
Headquarters, Washington, D.C.
(Phone: 202/358-1547)

Jim Doyle
Jet Propulsion Laboratory, Pasadena, Calif.
(Phone: 818/354-5011)

For Release
October 5, 1992

RELEASE: 92-164

ASTEROID'S ORBIT "CLOSES IN" ON EARTH

One of the largest near-Earth objects, an asteroid named "Toutatis," will make a close Earth approach on Dec. 8, 1992, passing by at about 2.2 million miles (3.6 million kilometers) distance.

Dr. Donald Yeomans, Head of the Near Earth Object Center at NASA's Jet Propulsion Laboratory, Pasadena, Calif., said the object, formally known as Asteroid 4179 Toutatis, passes Earth less than one degree above Earth's orbital plane every 4 years, making it an excellent object for study. The asteroid, at 2 miles (3.5 kilometers) diameter, is one of the largest to cross the Earth's orbit on a regular basis.

Yeomans said the ground-based viewing conditions will be excellent for infrared optical and radar observations just before, during and well after the close Earth passage, and he notes that astronomers in many areas of the world simultaneously will study the body using several different techniques.

Toutatis again will make close Earth approaches in 1996 and 2000. In 2004, it will come as close as about four Earth-Moon distances or about a million miles (about 1.6 million kilometers). Its orbit takes it almost to the distance of Jupiter's orbit before the sun's gravitational attraction pulls it back.

The approach of Toutatis this year and the one in 2004 represent the two closest Earth passages of any known asteroid for the next 30 years, said Yeomans.

Toutatis was discovered Jan. 4, 1989, by Astronomer Christian Pollas at Caussols, France, and was named after a Gallic deity called "protector of the tribe."

- end -

NASA News

National Aeronautics and
Space Administration

Washington, D.C. 20546
AC 202 453-8400

ISY

For Release

Ed Campion
Headquarters, Washington, D.C.
(Phone: 202/453-8536)

Lisa Malone
Kennedy Space Center, Fla.
(Phone: 407/867-2468)

October 6, 1992

EDITORS NOTE: N92-88

NASA SETS DATE FOR STS-52 SPACE SHUTTLE LAUNCH

NASA managers today announced Oct. 22 as the official launch date for the next Space Shuttle mission. The STS-52 flight will see the Space Shuttle Columbia and her 6 person crew deploy a satellite developed by the United States and Italy to obtain precise measurements of the Earth's tectonic plates. A series of U.S./Canadian experiments also will be conducted during the mission.

The launch window on Oct. 22 opens at 11:16 a.m. EDT and extends for 2 1/2 hours. The mission duration for STS-52 is 9 days, 20 hours, 46 minutes. At the end of the mission, Columbia is scheduled to land at Kennedy Space Center's Shuttle Landing Facility in Fla.

Mission Commander is James Wetherbee with Michael Baker serving as Pilot. Mission specialists are Charles Lacy Veach, William Shepherd and Tamara Jernigan. Steve MacLean is the payload specialist and the third Canadian citizen to fly aboard the Space Shuttle.

- end -

NASA News

National Aeronautics and
Space Administration

Washington, D.C. 20546
AC 202 453-8400

ISY

Debra J. Rahn
Headquarters, Washington, D.C.
(Phone: 202/358-1639)

For Release
October 6, 1992

RELEASE: 92-165

NASA AND RUSSIAN SPACE AGENCY SIGN SPACE AGREEMENTS

NASA and the Russian Space Agency (RSA) have signed two cooperative agreements in Moscow, in the areas of human space flight and Mars exploration.

"Signing these two agreements is the next crucial step in expanding cooperative space activities with our Russian partners. We are very anxious to begin working on these important programs," said NASA Administrator Daniel S. Goldin.

The Human Space Flight Agreement outlines the flight details of a Russian cosmonaut on the U.S. Space Shuttle, the flight of a U.S. astronaut on the Russian Mir Space Station and a joint mission including the rendezvous and docking of the Space Shuttle with the Mir Space Station.

The Mars '94 agreement is for the flight of two U.S./NASA scientific instruments on the Russian Mars '94 lander.

The agreements were signed by Administrator Goldin and RSA Director Yuri Koptev during the first annual U.S./Russian Space Policy Consultations.

Ambassador Frank Wisner, Under Secretary of State, headed the U.S. delegation and met with Russian Ministry of Foreign Affairs officials to review the U.S./Russian space relationship.

Human Space Flight Cooperation Agreement

An experienced cosmonaut will fly aboard the STS-60 Space Shuttle mission, scheduled for launch in November 1993. RSA has nominated Col. Vladimir G. Titov and Sergei K. Krikalev as the two cosmonauts who will undergo mission specialist training.

- more -

One cosmonaut will be designated the prime crewmember and the other designated backup crewmember. The cosmonauts are scheduled for arrival at NASA's Johnson Space Center, Houston, in October 1992.

A NASA astronaut will fly on a long-duration (more than 90 days) Mir Space Station flight. The flight's timing will coincide with a Shuttle docking flight in 1995. The astronaut will be flown to the Mir on a Soyuz spacecraft. The astronaut's duties will focus on science, particularly life sciences, as well as engineering and operational objectives.

Two NASA astronauts will receive full cosmonaut training with their cosmonaut crewmates at the Yuri Gagarin Cosmonaut Training Facility "Star City" near Moscow. They will begin training no later than 12 months prior to the agreed flight date. One astronaut will be selected as the prime crewmember and the other will be designated backup crewmember.

NASA will transport two cosmonauts in the Space Shuttle to replace the two cosmonauts on board Mir. Life sciences experiments, involving the NASA astronaut and the two cosmonauts on board the Mir, will be conducted while the Shuttle and Mir are docked. The NASA astronaut and the two cosmonauts who have been on the Mir will be returned in the Shuttle to the United States for continued post-flight life sciences experiments.

NASA Participation in the Russian Mars '94 Mission

The primary objective of this mission is to carry out further joint exploration of planet Mars in conjunction with the Russian Mars '94 mission. This may provide the opportunity for U.S. scientific instruments to be carried aboard the Russian spacecraft. This cooperation could significantly enhance the present Mars '94 mission and provide critical data for future human and robotic Mars missions.

One U.S. instrument is the Soil Magnetic Properties Experiment, and the other is the Soil Reactivity/Composition Experiment. These will enable scientists to characterize the Martian physical and chemical surface environment.

The soil magnetic properties experiment will use a magnet to collect and measure the magnetic minerals in the Martian soil. The soil reaction/composition experiment will provide chemical information about the volatile components in the Martian soil.

- end -

NASA News

National Aeronautics and
Space Administration

Washington, D.C. 20546
AC 202 453-8400

ISY

Debra Rahn
Headquarters, Washington, D.C.
(Phone: 202/358-1639)

For Release October 6, 1992

RELEASE: 92-166

COSMONAUTS SELECTED TO FLY ON A SPACE SHUTTLE

NASA Administrator Daniel S. Goldin has approved the selection of cosmonauts Sergei K. Krikalev and Col. Vladimir G. Titov as the two Russian candidates who will train to fly on a Space Shuttle mission scheduled for launch in November 1993.

"We are delighted with the selection of these two outstanding cosmonauts and look forward to their impending arrival at NASA's Johnson Space Center," Goldin said in an Oct. 5, 1992, letter to Yuri N. Koptev, Director-General, Russian Space Agency (RSA).

The two cosmonauts are scheduled to arrive at NASA's Johnson Space Center, Houston, later in October to begin mission specialist training on Shuttle systems, flight operations, and manifested payload procedures. One cosmonaut will be designated the prime crewmember, and the other will be designated as the backup crewmember.

The flight of a cosmonaut on the STS-60 mission is one element of the Implementing Agreement on NASA/RSA Cooperation in Human Space Flight that was signed today by Goldin and Koptev in Moscow.

Cosmonaut Biographies

Col. Vladimir Georgievich Titov, Soviet Air Force, was born Jan. 1, 1947, in the town of Sretensk, Chitinck region. Titov graduated from the Higher Air Force College in Chernigov, Ukraine, in 1970, where he served as a pilot-instructor until 1974. Titov has flown 10 different types of aircraft, has logged over 1300 hours flying time and holds the qualifications of Military Pilot, lst Class and Test-Pilot, 3rd Class.

Titov was selected to join the cosmonaut team in 1976 and in September 1981, served as a back-up crew member for Soyuz T-5 launched on May 18, 1982.

- more -

Titov made his first spaceflight as Commander of Soyuz T-8, launched on April 20, 1983. Titov was supposed to dock with Saylut 7, but was unable to because the Soyuz rendezvous radar antenna failed to deploy properly. After several attempts, Titov aborted the rendezvous to avoid a crash and returned to Earth after a flight lasting just over 2 days.

Titov next served as backup for the Soyuz T-9 mission launched on June 27, 1983.

Titov was onboard Soyuz T-10 on Sept. 27, 1983, which caught fire 1 minute before launch when a propellant line valve failed to close at T-90 seconds. The fire quickly engulfed the rocket, but controllers were able to pull the Soyuz descent module clear by the launch escape system. The crew landed safely some 2.5 miles (4 km) from the launch vehicle.

In 1987 he graduated from the Yuri Gagarin Air Force Academy while working at the Yuri Gagarin Cosmonaut Training Center.

Titov was Commander of the Soyuz TM-4 launched on Dec. 21, 1987. Titov and Musa Manarov set a new record for long duration in space of 365 days, 22 hours and 89 minutes. Upon his return to Earth, Titov was awarded the title of Hero of the Soviet Union and also received his second Order of Lenin. In addition, the French awarded him the title of Commandeur de la Legion d'Honneur and in 1990, he and Manarov were awarded the U.S. Harmon Prize -- the first Soviet citizens to win the award -- in recognition of their world endurance record.

Titov is married and has a daughter born in 1975 and a son born in 1985.

Sergei Konstantinovich Krikalev was born on Aug. 27, 1958, in Leningard. He completed his studies at the Institute of Mechanics in Leningrad in 1981, and then worked in a design bureau where he participated in the creation of new space technology devices. He is involved in sport aviation and holds a Master of Sport in sport aviation.

Krikalev began cosmonaut training in November 1985 and made his first spaceflight as flight engineer onboard Soyuz TM-7, launched on Nov. 26, 1988. Krikalev returned to Earth after having spent 151 days, 11 hours and 8 minutes in space. His second flight aboard Mir was from May 18, 1991, to March 25, 1992 (312 days).

Upon his return, Krikalev was awared the title of Hero of the Soviet Union and also received the Order of Lenin. In addition, the French awarded him the title of L'Officier de la Legion d'Honneur.

Krikalev is married and has a daughter born in 1990.

- end -

NASA News

National Aeronautics and
Space Administration

Washington, D.C. 20546
AC 202 453-8400

ISY

For Release

Michael Braukus
Headquarters, Washington, D.C.
(Phone: 202/358-1547)

October 6, 1992

RELEASE: 92-167

NASA AWARDS SCIENCE GRANTS FOR SPACE STATION FREEDOM

NASA has awarded approximately $15 million in annual funding for 124 microgravity research grants to develop the research potential of Space Station Freedom as one of the nation's premiere science and technology assets.

"These awards are a major step towards the space station era of microgravity research," said Robert Rhome, Director, NASA's Microgravity Science and Applications Division, Headquarters, Washington, D.C. "The hardware and experiments developed from these grants could make Space Station Freedom a microgravity laboratory unrivaled by any other."

The grants to the 119 researchers represent an increase of 70 percent in the number of investigators sponsored by the microgravity division. The division now sponsors nearly 200 scientific investigators and plans to expand to at least 300 before Space Station Freedom is operational in 1997.

The selected investigators represent 60 universities, eight corporate or private laboratories, five government laboratories and four NASA centers. Nearly 500 proposals were submitted by scientists in response to the NASA research announcements in fluid dynamics, biotechnology, materials science and fundamental science. The proposals were evaluated by peer review panels of recognized experts in those areas.

- end -

NOTE TO EDITORS: The names of the selected investigators can be obtained by calling the NASA Headquarters Newsroom at 202/453-8400.

NASA News

National Aeronautics and
Space Administration

Washington, D.C. 20546
AC 202 453-8400

ISY

For Release

Paula Cleggett-Haleim
Headquarters, Washington, D.C.
(Phone: 202/358-1547)

October 8, 1992
EMBARGOED Until 1 p.m. EDT

Jim Elliott
Goddard Space Flight Center, Greenbelt, Md.
(Phone: 301/286-6256)

Ray Villard
Space Telescope Science Institute, Baltimore, Md.
(Phone: 410/338-4514)

RELEASE: 92-168

HUBBLE USES NATURE'S LENS TO EXPLORE THE COSMOS

NASA's Hubble Space Telescope (HST) has photographed a striking mirror-image of a very distant galaxy.

The observations might unlock the secrets of the dark matter mystery that have puzzled astronomers for decades. Understanding the nature of dark matter might lead to predictions of whether the universe will expand indefinitely or collapse of its own gravity.

The mirror image is seen through a huge cluster of foreground galaxies located four billion light-years away. The gravity of the galaxy cluster acts as a natural lens or magnifying glass, bending, concentrating and focusing the light of the distant galaxy into several images, each of which is bigger and brighter than otherwise would be the case.

"This rare combination of Hubble's powerful telescope mirrors and the natural 'telephoto lens' gives astronomers new information on the nature of distant galaxies," says Richard Ellis of Durham University, England.

By studying how the natural lens bends the light, investigators also can deduce the amount and location of mysterious "dark matter," thought to make up most of the cluster's mass.

- more -

Astronomers estimate that at least 90 percent of the universe consists of material that does not emit any radiation detectable by current instrumentation. Although dark matter cannot be seen directly, the phenomenon of gravitational lensing provides a powerful probe in the search for dark matter.

"We already knew from ground-based images that this cluster of galaxies could act as a gravitational lens," says Ellis. "The remarkable feature of the new data is the detail with which we can study background galaxies by combining the lensing phenomenon with the excellent image quality possible with HST.

"The unique combination has allowed us to measure the bending power of the lens very precisely, enabling us to determine the distribution of matter in the cluster regardless of whether or not it emits light."

Ellis and co-researchers Dr. Warrick Couch (University of New South Wales, Australia), Dr. Ray Sharples and Ian Smail (Durham University) made the discovery when observing the cluster called AC114 in one of the first long exposures with the spacecraft's Wide Field Camera.

Two, 6-hour exposures revealed a striking pair of faint objects close to the center of the cluster. Each image has a faint structure attached to it. These structures show perfect mirror-symmetry, as expected if both are lensed images of the same source. The images are unusually far apart for a lensed system, implying AC114 has a dense massive core.

"Despite their wide separation, the high degree of symmetry and near-identical colors of the objects are a strong indication that they are images of the same source, supporting the hypothesis that we have discovered a very massive lens," Ellis explained.

"We believe that we are looking at a very faint, distant galaxy undergoing an energetic period of star formation. At first we thought we were privileged to see such a dramatic feature in the first long exposure with Hubble, but we now believe that similar, highly magnified, multiple images will be observed when the spacecraft looks through the centers of other massive clusters."

A Zoom Lens In Space

Albert Einstein was the first to point out that gravitational fields deflect light as well as matter. The gravitational field of a massive object -- such as a cluster of galaxies -- will deflect light rays from more distant sources seen close to the cluster center.

This has the effect of shifting their apparent positions and magnifying and distorting their shapes and brightness. The greater the cluster's mass, the greater the effect. If the cluster is dense enough it can create several images of a single distant object.

Multiple-lensed systems provide astronomers with a powerful probe to investigate the form of the gravitation field of the lens. Ellis and fellow researchers have developed numerical models based on Einstein's theory.

Starting from the location and shapes of the first two images, they predict the existence and location of further images. The remarkably blue color and unusual morphology of the source has enabled them to identify a third fainter image.

This, and any further images similarly located, will enable the group to refine their lens model. The goal is to make it precise enough to find the distances and properties of hundreds of very faint galaxies viewed through the cluster.

These objects are far too faint for more traditional istance-measuring techniques and promise to reveal the nature of the very early universe. "Just as in school optics, once you know the basic properties of a lens, you can examine the images it produces and figure out how far away the sources are," Ellis explained.

The Search for Dark Matter

Although dark matter cannot be seen, its existence has been inferred from its gravitational influence on the motions of galaxies in clusters. Clusters like AC114 are not only very useful probes of the galaxies at the limits of the universe, their lensing properties also show how much dark matter they contain.

More importantly, the amount can be measured directly via gravitational lensing. Ellis' model for AC114 provides an important new measurement of the amount of dark matter in AC114 which agrees with previous estimates based on the motions of its galaxies.

It also suggests, however, that the dark matter is more concentrated toward the center of the cluster than the individual galaxies. This is contrary to the predictions of models in which the dark matter is made up of subatomic non-interacting particles.

The group plans to extend this work to other clusters at different distances. This will allow the researchers to probe the universe at different times in the distant past (because of the effect of light-travel time). Such observations will enable them to follow the evolution of the dark and visible matter independently.

"We intend to use HST's superlative image quality to search for similar lensed systems in other rich clusters," said Ellis. "Using these we will be able to directly probe the changes in the structure of clusters as they evolve and grow in the universe."

- more -

The Space Science Telescope Institute is operated by the Association of Universities for Research in Astronomy, Inc., for NASA under contract with the Goddard Space Flight Center, Greenbelt, Md. The Hubble Space Telescope is a project of international cooperation between NASA and the European Space Agency.

- end -

EDITORS NOTE: A photograph of the gravitational lens in galaxy cluster AC114 is available to news media by calling the NASA Headquarters Broadcast and Imaging Branch at 202/453-8375.

Color: 92-HC-674
B&W: 92-H-730

A videotape to accompany this release containing animation of the gravitational lens also is available at the Broadcast and Imaging Branch.

NASA News

National Aeronautics and
Space Administration

Washington, D.C. 20546
AC 202 453-8400

ISY

For Release

Mike Braukus
Headquarters, Washington, D.C.
(Phone: 202/358-0872)

October 8, 1992
EMBARGOED UNTIL 1 P.M. EDT

Dolores Beasley
Goddard Space Flight Center, Greenbelt, Md.
(Phone: 301/286-2806)

Dr. Bernhard Haisch
Center for Extreme Ultraviolet Astrophysics
University of California, Berkeley
(Phone: 510/643-5639)

RELEASE: 92-169

NASA SPACECRAFT "SEES" OBJECT 2 BILLION LIGHT YEARS AWAY

A powerful, exotic object 2 billion light-years beyond the Milky Way galaxy has been observed by astronomers using a new NASA spacecraft designed to detect radiation in the little-explored extreme ultraviolet portion of the electromagnetic spectrum.

"Twenty years ago no one would have believed you could see out of the solar system at EUV wavelengths. But now -- for the first time -- we actually have obtained a EUV spectrum for an object beyond our galaxy," said Dr. Ed Weiler, Chief of NASA's Ultraviolet and Visible Astrophysics Branch.

The radiation source was observed by the Extreme Ultraviolet Explorer (EUVE) Spacecraft, launched into Earth orbit on June 7 to search the spectrum between visible light and x-rays.

Observation of the EUV spectrum both inside and out of the Milky Way galaxy is often blocked by gas and dust in interstellar space. However, the distribution of the gas and dust is uneven which allows the EUVE telescopes to see distant sources of radiation.

- more -

According to the EUVE science team, the object is a tremendously energetic elliptical galaxy that radiates as much energy as a trillion suns. Some astrophysicists think such a galaxy, called a "BL Lac Object," may contain at its center a super-sized black hole with a mass of 100 million suns and may be a cousin to the even more mysterious quasars.

The science team is headed by Prof. Stuart Bowyer and Dr. Roger Malina at the University of California-Berkeley Center for Extreme Ultraviolet Astrophysics.

BL Lac Objects, like PKS 2155-304, vary dramatically in brightness in all other spectral regions. Now scientists have discovered that it was rock steady in the EUV for a day and a half, according to Dr. Herman Marshall, EUVE astronomer.

"This result is extremely interesting, but we would like more observations to confirm this," said Goddard's Dr. Yoji Kondo, EUVE Project Scientist.

"But it might be that we have found the right window, as Dr. Marshall has indicated, to see the steady infall of material onto the giant black hole that the theorists think may be at the very center of this object," said Dr. Kondo.

The EUVE satellite is now 11 weeks into a survey of the entire sky. It will provide astronomers with their first detailed maps in several EUV energy bands. Radiation at these energies is emitted by multi-million degree coronae on stars, by giant eruptions on novae, by the hot surfaces of white dwarfs and by other exotic sources in the cosmos such as the BL Lac object.

Other Observations

One of the new EUV sources detected by the satellite early in the mission was the corona of a star much like the sun, located about 16 light-years away from Earth. A white dwarf companion 7 arc-minutes away also appears in the EUV image.

On July 8-9, an outburst was observed from a cataclysmic variable, RE 1938-461, a closely orbiting pair of stars in which gravitational forces pull matter from the outermost layers of one star onto the surface of the other, a white dwarf companion. The hot compressed stellar material generates an explosive burst of EUV radiation as it falls into the deep gravitational field of the white dwarf.

Other explosive events are flares on stars. These are unpredictable, giant versions of eruptions known to occur on a much smaller scale on the sun. The EUVE caught two such events on the red dwarf stars AT Mic and AU Mic.

Spacecraft, Operations Performing Fine

All instruments are performing at or above expected levels, according to instrument Principal Investigator Roger Malina. The EUVE Science Operations Center, based at CEA, operates around the clock, sending commands to point the instruments at selected astronomical sources and recording the findings of the satellite's four telescopes and three spectrometers.

A novel feature is that the staff includes more than two dozen undergraduate students who are getting a unique hands-on educational experience.

Researchers and engineers in Berkeley are pouring over the calibration and check-out data obtained during the first 6 weeks of the mission. These data serve a dual purpose. They verify the instrument performance and at the same time, give astronomers valuable, new measurements to test their models.

The EUVE Project is managed by the NASA Goddard Space Flight Center, Greenbelt, Md., for the Office of Space Science and Applications, Washington, D.C.

- end -

NOTE TO EDITORS: Three photographs are available to news media to accompany this release by calling the NASA Headquarters Broadcast and Imaging Branch at 202/453-8375:

	Color	B&W
HR 6094	92-HC-597	92-H-728
EUV Spectrum of AU Microscopii	(no color)	92-H-729
PKS 2155-304	92-HC-673	92-H-730

A videotape to accompany this release containing an interview with Dr. Stuart Bowyer and Local Bubble animation also is available at the Broadcast and Imaging Branch.

NASA News

National Aeronautics and
Space Administration

Washington, D.C. 20546
AC 202 453-8400

ISY

For Release

Jim McCulla
Headquarters, Washington, D.C.
(Phone: 202/453-8398)

Oct. 9, 1992
AFTER 8 PM PDT

RELEASE 92-170

NASA WILL BUILD MODEL CULTURALLY DIVERSE WORKFORCE

Los Angeles, CA -- NASA is committed to building a culturally diverse workforce to pursue the exploration of space, Daniel S. Goldin, the agency's Administrator, declared here today.

"I am personally and deeply committed to making NASA a model for the nation in building a culturally diverse workforce at every level," Goldin said in a speech to the Society of Hispanic Professional Engineers. "We need a space program that keeps America on the competitive cutting edge. We need to make sure that job opportunities in this exciting business are open to every American. And we need to have a space agency filled with role models for our young people."

Goldin made the following points in his speech:

o Every NASA center and major program office now has a plan to increase cultural diversity and the directors will be held accountable for success.

o NASA and the Society of Hispanic Professional Engineers should "build a partnership" to stimulate cultural diversity in the agency. One element is increased NASA recruiting at universities in areas with large Hispanic populations

o A program to achieve greater cultural diversity also is being introduced into NASA's procurement programs.

(Note: The speech will be delivered about 8 p.m. PDT at the Westin Bonaventure Hotel, 404 S. Figueroa St., Los Angeles. A full text is attached.)

- end -

EXCERPTS OF REMARKS BY
NASA ADMINISTRATOR DANIEL S. GOLDIN
SOCIETY OF HISPANIC PROFESSIONAL ENGINEERS
LOS ANGELES, CALIFORNIA
OCTOBER 9, 1992

Every time we see the space shuttle lift off from Florida, the pride of America goes with it. As the Administrator of NASA, I could not be more proud of any group of individuals as I am of our astronauts. They are multi-talented, super-smart, many with more than one doctorate. The qualifications they have to meet are probably the toughest of any job in the world.

It should come as no surprise, then, that our astronaut corps represents the full cultural diversity of America. We didn't have to go out and find the best from every segment of society; they came looking for us.

It takes more than just astronauts, though, to have a space program. It takes engineers to build spacecraft. It takes scientists to plan experiments. It takes procurement officers, and accountants, and computer programmers. In all these positions, NASA must represent the full cultural diversity of America so that children can have role models to show them that a good education can give them an inspiring, well-paying job.

I grew up in the Bronx at a time when it was home to dozens of different racial and ethnic groups. Throughout my life, I have enjoyed the energy, creativity and different points of view that emerge when cultural diversity is present in the community and the workplace.

Our nation is a wonderful mosaic of diverse people. But for many, the promise of the American Dream appears far out of reach. Before moving to Washington this spring, I spent the last 25 years living here in Los Angeles. The terrible sights broadcast from South Central a few months ago deeply disturbed me. The violence we saw was truly a national tragedy. To prevent future tragedies, we need to offer people hope, inspiration, and opportunity.

That's why I am personally and deeply committed to making NASA a model for the nation in building a culturally diverse workforce at every level.

We need a space program that keeps America on the competitive cutting edge. We need to make sure that job opportunities in this exciting business are open to every American. And we need to have a space agency filled with role models for our young people.

When I was approached by the Administration about taking this job, I told them how committed I was to bringing more cultural diversity to NASA. President Bush not only supported me in that, he enthusiastically endorsed that goal.

I've been fortunate to be able to convince several highly qualified and talented members of under-represented groups and women to join me in managing NASA.

Shortly after becoming Administrator, I was extremely upset to learn that NASA had so few Hispanics, African Americans, Asians, and Native Americans in our Senior Executive Service -- that's the highest level of civil service -- particularly among the SES corps at the NASA field centers. I have asked every NASA Center director and associate administrator to change this situation. Each one now has a plan for cultural diversity that I will hold them accountable for achieving. The kind of world class talent NASA needs is not bounded by race or sex. We intend to find the best, and enrich NASA's cultural diversity.

Now, I could stand up here tonight and reel off a lot of statistics on how hispanic representation is increasing. I could tell you that the percentage of hispanic engineers and scientists has almost doubled in the last 12 years, and that the percentage of hispanic new hires has increased, and that the percentages of hispanic managers at the GS-13 to GS-15 level have increased.

But I'm not going to do that, because frankly, despite improvements, the levels are still far too low. Hispanics make up nine percent of the U.S. population, and that's growing. But at NASA, only 3.9 percent of our engineers and scientists are hispanic. That's not good enough, and if we don't take action to do better, then we have failed the American people in our responsibility to offer inspiration, hope, and opportunity for Americans from every walk of life to participate in the excitement of the space program.

One action we can take is to build a partnership: NASA and the Society of Hispanic Professional Engineers. That's why I'm here. That's why NASA recruiters are here interviewing the hundreds of college students you've helped gather here. When you go fishing, you have to go where the fish are. We need to do more with Texas A&I, New Mexico State, University of Puerto Rico, Texas-El Paso, the University of New Mexico, and many of the institutions here in California.

NASA has already joined with the University of New Mexico to start the NASA Scholars program, where 100 engineering and science students -- 86 of them hispanic -- are being financially supported by NASA. We have 250 minority students on full scholarship at other colleges -- 115 of them hispanic -- pursuing undergraduate and graduate degrees in science and engineering.

But as you well know, concentrating on those already in engineering and science majors isn't enough. We have to fill up the pipeline at the beginning, not just concentrate on the end.

Take any 10,000 high school sophomores. Of those 10,000, only 500 will get a bachelor's degree in science or engineering. Of those 500, only 110 will get masters' and just 20 will get Ph.D.'s. The number of minorities in those figures is far lower. I strongly believe, however, by working together, we can change that.

Space has the power to excite students about learning like nothing I've ever seen. Learning about geology becomes exciting if you can study rocks from the Moon. Learning about math can mean something if you're calculating the amount of power it takes to get a rocket to Mars.

NASA's education programs reach out to more than 1.8 million students, and more than 130,000 teachers across the country. That's why many of these programs are targeted to the segments of our society that are under-represented in science and technology.

In D.C. and Maryland, NASA's El Ingeniero summer program exposes 7th and 8th grade hispanic students to career opportunities in engineering. NASA has been the main sponsor of PACE -- the Program for Advancement of Careers in Engineering, an outreach program to junior high and high school students carried out by student chapters of the Society of Mexican American Engineers and Scientists in California, Texas, Arizona, and New Mexico. Our Laser Van distributes educational materials like computer programs, posters, and workbooks to teachers all over the country.

We do all this, and much more, to improve the education of our young, because you never know which video, which computer program, or which co-op program will influence a young person to dedicate their life to science or engineering.

Dr. Benjamin Mays once said, "The tragedy of life doesn't lie in not reaching your goal. The tragedy lies in having no goal to reach. It is not a disgrace to reach for the stars, but it is a disgrace to have no stars to reach for."

NASA's educational programs lift students' eyes up toward the stars, giving them hope and opportunities they might never have imagined.

While broadening our workforce, we also seek to broaden our contractor base. We are committed to making NASA's small and disadvantaged business program the best in the country -- an example that government and industry will seek to emulate.

While Congress has imposed on NASA an 8 percent goal for contracting to small and disadvantaged businesses, NASA has upped the ante. Congress did not set a deadline for meeting the goal, but we have imposed one on ourselves: 1994. Between now and the end of fiscal year 94, we plan to offer significant prime and subcontracting opportunities to minority- and woman-owned businesses.

Meeting our goal will not be easy. But we are committed to it. Among the steps we are taking:

- Establishing firm percentages for small and disadvantaged business subcontracting as part of our prime contracts.

- Making use of small and disadvantaged business subcontracting as an important evaluation factor in every source selection.

- Rewarding prime contractors with special award fees when they exceed their subcontracting goals by certain percentages.

We are also setting up a NASA Minority Business Resource Advisory Committee to help us identify the barriers in the contracting process so that more more minority businesses can become a part of the NASA family. I invite you to nominate members for this committee. Send their names to my office within a few weeks, because we're ready to get started. This committee will help disprove the notion that there are no high tech small and disadvantaged businesses. We know they're out there, and we'll find them, and nurture them because we want to work with firms that have the desire to reach for the American Dream and reach for the stars.

As we approach the year 2000 -- the dawn of a new century -- it's hard to imagine the future without thinking of new achievements in space. There's so much left to learn; so many places yet to go.

And it will be a new NASA that takes us there. A NASA where African American engineering students from Tuskegee University go on to build Space Station Freedom. A NASA where Asian students at Cal Tech plan a probe to the last unexplored planet: far-away Pluto. A NASA where University of Puerto Rico students learn radio astronomy at Arecibo.

There's no question why we're the greatest nation on Earth. We're the only country made up of people from every nation on Earth. It's like the blending of different metals to build an alloy. Diversity makes us stronger.

When I moved into the Administrator's office this year, I found a plaque -- all covered with dust. On that plaque was the Apollo 11 patch, and the signatures of Neil Armstrong, Buzz Aldrin, and Mike Collins. On the top, it's written, "Carried to the Moon aboard Apollo 11. Presented to the Mars 1 crew."

Now, in March, 1993, Dr. Ellen Ochoa will fly on the space shuttle and become the first hispanic woman in space. The week that happens, somewhere in America an amazing thing is going to happen. I can't tell you exactly where -- it may be in East L.A., or San Antonio, or San Juan. But somewhere, a hispanic schoolgirl will promise herself that she would be on that first flight to Mars.

At the big press conference before the flight, they'll ask her if she ever dreamed of becoming the first American to go to Mars. And she'll say, "YES. My dream started in March, 1993, when I saw Ellen Ochoa fly in space and I knew that in NASA, no dream was too big -- no limit could be placed on what I could accomplish." That is the NASA I want to build. I want your help to do it. Thank you.

# # #

NASA News

National Aeronautics and
Space Administration

Washington, D.C. 20546
AC 202 453-8400

ISY

For Release

Brian Dunbar
Headquarters, Washington, D.C.
(Phone: 202/358-1547)

October 13, 1992

Jim Elliott
Goddard Space Flight Center, Greenbelt, Md.
(Phone: 301/286-6256)

RELEASE: 92-171

ALASKA EXPERIMENT SAVES LIFE

A satellite-aided search and rescue team in Alaska recorded its first save on Oct. 4 while using an experimental beacon, officials at NASA's Goddard Space Flight Center, Greenbelt, Md., reported today.

Rescuers saved John Brower, a 41-year-old native Alaskan hunter, who developed abdominal cramps that immobilized him for 4 days after leaving Barrow, Ala., on his snowmobile.

In severe pain and unable to move, Brower actuated the experimental Personal Locator Beacon (PLB) provided by the North Slope Borough Search and Rescue Department, the organization conducting the experiment.

"It worked just like it was supposed to work," explained Chuck Caldwell, Project Coordinator for the North Slope Borough Search and Rescue Department. Caldwell and Charles Stalker flew the helicopter that picked up Brower.

Brower's tiny emergency transmitter sent a distress signal that was picked up by an overflying Russian satellite. The satellite relayed the information to a recently upgraded Local User Terminal in Fairbanks. From there, the information was forwarded to the Air Force Rescue Coordination Center in Anchorage and to the North Slope Borough rescue officials.

NASA, the National Oceanic and Atmospheric Administration (NOAA), the U.S. Air Force and the U.S. Coast Guard are supporting the Satellite Search and Rescue program.

- more -

Currently, there are six satellites with search-and-rescue equipment -- three Russian and three U.S. -- circling the Earth in polar orbit. The Russian satellites primarily are navigational satellites for that nation's merchant marine. The U.S. satellites are meteorological satellites operated by NOAA.

The first distress signal was received in Fairbanks at 8:45 p.m. Oct. 3. Caldwell and Stalker got the message at 9:52 P.M. and were off the ground in their Jet Ranger at 10:42 p.m.

The coordinates given the pilots turned out to be only 0.2 miles from the ill hunter's location. They were over him at 11:33 -- only 2 hours and 48 minutes after the first distress signal was received on the ground.

In spite of the fact that this particular time interval represents an amazing response, according to search and rescue officials, Caldwell said that Brower's first words were, "What took you so long?"

Caldwell and Stalker faced a 200-foot ceiling, blowing snow and icing conditions for the landing. "And it was pitch black," Caldwell said.

"He was all bent over when we got to him, and he obviously was in a lot of pain," said Caldwell. Brower told Caldwell he had started feeling bad in the afternoon and when the pain got so bad that he couldn't move, he set off the beacon.

They arrived back at Barrow at 12:24 a.m. and immediately took Brower to the hospital. Doctors there determined that he was suffering from an intestinal blockage, Caldwell said.

"This experiment was intended to show the value of these emergency devices," said Ron Wallace, NASA's Search and Rescue Mission Manager at Goddard Space Flight Center. "The short rescue time certainly points out how effective they can be."

The satellite-aided search and rescue system, called COSPAS/SARSAT, is a 10-year-old international program involving Canada, France, Russia and the United States. In that time, more than 2,400 lives have been saved.

Until this experiment started in late July, the only government-approved emergency beacons were Emergency Locator Transmitters for aircraft and Emergency Position Indicating Radio Beacons for ships.

The PLB experiment is designed to prove the need for a lightweight beacon that can be carried and used in an emergency by campers, hunters, boaters and outdoors people. Before it is available for widespread use, it must be approved by the Federal Communications Commission.

The borough purchased 20 beacons for the 3-year experiment. The beacons cost between $1,200 and $1,700, Caldwell said. They transmit the emergency signal on a 406 Megahertz frequency and have a 121.5 Megahertz signal to allow search parties to "home-in" on the location.

The North Slope area is a good location for the experiment because of its remoteness. The borough covers 92,000 square miles (235,520 sq km) -- an area the size of Utah -- and has only eight towns and villages. There are almost no roads and travel is accomplished by amphibious vehicles in the summer and by snowmobiles in the winter, according to Caldwell.

- end -

NASA Organization Changes and Personnel Reassignments

Announced by the Administrator
October 15, 1992

Personnel (Former Position)	New Assignment
Dr. Lennard Fisk (Associate Administrator for Space Science and Applications)	NASA Chief Scientist
Dr. Shelby Tilford (Director, Earth Sciences Division)	Associate Administrator for Mission to Planet Earth (Acting)
Dr. Wesley T. Huntress (Director, Solar System Exploration Division)	Associate Administrator for Mission from Planet Earth (Acting)
Mr. Thomas Campbell (NASA Comptroller)	Space Station Freedom Chief Financial Officer
Mr. Martin P. Kress (Assistant Administrator for Legislative Affairs)	Space Station Freedom Deputy Program Manager for Policy & Management
Mr. Gary Allison (Deputy Comptroller)	NASA Comptroller (Acting)
Ms. Mary D. Kerwin (Director, Liaison Division)	Assistant Administrator for Legislative Affairs (Acting)
Mr. Cecil Rosen (Director for Aeronautics)	Associate Administrator for Aeronautics (Acting)
Mr. Gregory Reck (Director for Space Technology)	Associate Administrator Advanced Concepts and Technology Office (Acting)
Mr. Courtney Stadd (Senior Director for Commercial Space, National Space Council)	Deputy Associate Administrator Advanced Concepts and Technology Office (Acting)
Mr. Pete Petersen (Associate Administrator Aeronautics & Space Technology)	Special Assistant to the Administrator (15-Month Study/Long-Term Plan to Identify Critical Facilities for Aeronautics and Space)
Mr. John Mannix (Assistant Administrator for Commercial Programs)	Associate General Counsel for Intellectual Property
Mr. Sam Keller	Associate Administrator for Russian Programs on Special Assignment

NATIONAL AERONAUTICS
AND SPACE ADMINISTRATION

AGENCY-WIDE CONTINUOUS IMPROVEMENT INITIATIVES

RED AND BLUE TEAMS

➔ Red and Blue teams afforded us the unique opportunity to start an important, critical self-evaluation. The Red and Blue teams were the channel through which we chose to identify Agency-wide cost savings and program enhancements. The teams have made satisfactory progress in Phase 1 of this evaluation, with a projected 17 percent savings in costs.

➔ NASA is in the middle of Phase 2 of the Red and Blue team review, working on implementation plans and continuing to examine the programs for further cost savings. Upon completion of Phase 2, we will establish a permanent Independent Assessment Team, responsible for monitoring and evaluating the implementation of Red and Blue team recommendations. Implementation of Red and Blue Team recommendations will take years, but we can be proud that the review was a comprehensive, bottoms-up review that gave all employees the opportunity to speak and be heard regarding the goals and objectives of the Agency.

FORMAL TOWN MEETINGS

➔ The Administrator has held a series of informal meetings with Congress, private industry, professional societies, academia, and NASA organizations. As part of the ongoing effort of NASA to develop a shared vision for the future of the U.S. civil space program, a series of formal town meetings will be held across the country. The goals of the town meetings are to expose the public to the new vision of NASA, emerging from the Red and Blue Review teams; to reach out to businesses not currently involved in NASA programs; and to gain inputs on how to accomplish NASA's programs better, faster, and cheaper within the NASA strategic planning process. The meetings will be held in Raleigh-Durham, NC (Nov. 9); Hartford, CT (Nov. 17); Indianapolis, IN (Nov. 20); Los Angeles, CA (Dec. 3); Tampa, FL (Dec. 11); and Seattle, WA (Dec. 15). These meetings will give the public the opportunity to validate our shared vision and will help NASA once again create a national agenda for the Agency.

CONTRACT EXCELLENCE

➔ For the past year, NASA has conducted a review of award fee contracting, with implementation of a new policy expected by January 1, 1993. The new policy places greater emphasis on the selection of contract type, with the likelihood that more cost-plus-incentive-fee and fewer cost-plus-award-fee (CPAF) contracts will be used. NASA is working with an industry process action team to refine these concepts, and industry's viewpoints will continue to be evaluated in the policy development. Areas we are continuing to refine include:

- Award fees will be finally determined after delivery of the good or service (instead of periodically during the contract). This will focus both parties more on the end product of the contract and less on interim periods.
- Base fees will be eliminated, increasing the contractor's incentive to excel.
- Positive and negative performance incentives will be used on major hardware contracts. Where the product delivered demonstrates good performance in its intended use, the contractor will earn greater profits. Where the product delivered performs poorly, or not at all, in its intended use, the contractor will have to pay the Government money. The object is simply to reward excellence and penalize mediocrity.

➔ A NASA-wide rating system is being established for use on CPAF contracts. It works with the past performance system now in place to evaluate proposals. The object is to provide clear, consistent standards for use by all Centers, and give contractors a system common to all Centers with which they contract. This will simplify doing business with NASA.

➔ Evaluations and fee payments are now being tracked across the Agency with the object of decreasing the time to rate and pay fee to contractors.

➔ Training handbooks and courses are being developed to help our technical, procurement, and other people, in awarding and administering award fee contracts.

CULTURAL DIVERSITY

- NASA seeks a culturally diverse work force--at all levels. NASA's senior staff was recently polled for creative ways to identify and attract culturally diverse candidates to NASA.
- Process improvements and policy changes that will enhance the cultural diversity of the pool of management candidates have been identified and are being evaluated.
- The senior staff has developed plans for achieving a multicultural work force. We have a challenging task in building a work force which is representative of the general population. Employees are encouraged to identify candidates that will give NASA the best and brightest minds in a multicultural environment.

CONTRACTOR METRICS

- A team of industry representatives and NASA personnel is developing a set of contractor metrics that will measure the performance of NASA's major contractors. The measurements will focus on areas such as cost, schedule, technical performance, socio-economic gains, quality, management, and continuous performance. A regular "report card" will be issued, showing how industry is performing. Implementation and reporting of results will begin in January 1993.

SMALL AND DISADVANTAGED/WOMEN-OWNED BUSINESSES (SDB)

- Congress requires NASA, to the fullest extent possible, to award at least 8 percent of its contract dollars to small business concerns and other organizations owned or controlled by socially and economically disadvantaged individuals, including women. A plan for reaching the 8 percent goal was issued in 1990. The Agency has until 1994 to meet the minimum goal. NASA did not meet its goal in 1992, which means we have a greater challenge in 1993.
- We are enhancing our SDB awards by emphasizing SDB awards in Acquisition Strategy Meetings and Procurement Plans, inserting mandatory SDB subcontracting goals in solicitations, emphasizing SDB subcontracting in award fee contracts and source selection; and giving the technical community primary responsibility for meeting the goal. Each AA has met with its Center to review <u>all</u> contracts and requirements and has agreed to significantly increase subcontracting opportunities in FY1993.
- NASA/JPL is forming a mentor program with SDBs. It will sponsor two or three SDBs in the Los Angeles area. Such a program will help tie SDBs into the economic mainstream, and provide a forum for relationships among public and private business communities to improve the availability of financing, procurement, and contracting opportunities, and provide technical advice and other business resources.
- A NASA Minority Business Resource Advisory Committee has been formed to broaden our contractor base. This group will help us identify the barriers in doing business with NASA, as well as identify more businesses that should be a part of the NASA family.

PROGRAM EXCELLENCE

- The program excellence initiative is a broad-based activity to strengthen and streamline the policies and processes governing management of our major system development projects.
- A Project Planning Team is conducting a survey of recently completed and ongoing projects to determine the problems and needed changes as viewed by our field center project managers who bear day-to-day responsibility. The findings of this planning team will be integrated with those of other teams addressing this issue. Revised policies and processes will be developed by the end of the calendar year.
- The policies will include the establishment of baseline contracts between AA's and project managers; these agreements will set forth project requirements and objectives, including a cost baseline. A cost cap will be established which, if exceeded by more than 15 percent, will precipitate the convening of a special board led by the Deputy Administrator to review the project and its future.
- Additionally, an independent cost estimating group will be established with responsibility for assessing the realism of cost estimates and providing independent cost recommendations to the Program AA's and the Deputy Administrator.
- A set of metrics will be developed to measure excellence in each of our major programs.

NATIONAL AERONAUTICS AND SPACE ADMINISTRATION

ADMINISTRATOR'S CONTINUOUS IMPROVEMENT TEAMS

RED AND BLUE TEAM, PHASE 2: Phase 2 of the Red and Blue Team continues NASA's critical self-evaluation, with the aim of developing implementation plans and continuing to examine the programs for further cost savings. The efforts of Phase 2 will be completed in November 1992.

HEADQUARTERS (HQ) ROLES AND MISSIONS TEAM: The HQ Roles and Missions Team is conducting an independent critique of the roles and missions of NASA HQ, with the objective of revitalizing HQ functions, ensuring that all HQ employees are engaged in work critical to that mission, and that HQ's roles reflects those elements essential to any HQ function. The team will be completed with its work by December 1992, with implementation complete by the Spring of 1993.

STRATEGIC PLANNING TEAM: NASA will develop a strategic plan to guide the Agency into the next century. Dr. Charles Pellerin will chair the strategic planning group. The effort will begin in October.

PROJECT EXODUS: A NASA team is developing a succession plan to address a potentially sizable increase in voluntary retirements after January 1994. A comprehensive Agency-wide career development program will also be developed.

NASA-WIDE METRICS PROCESS ACTION TEAM: A process action team is identifying and establishing NASA-wide metrics. The metrics will be developed by January 1993, with results institutionalized by April 1993.

PROGRAM EXCELLENCE TEAM: The program excellence initiative is a broad-based activity to strengthen and streamline the policies and processes governing management of our major system development projects. Under the leadership of Dr. Harold Robins, revised processes and policies will be developed by the end of the calendar year. As part of the program excellence initiative, an independent cost estimating group will be established to assess the realism of cost estimates and provide independent cost recommendations. A set of metrics will be developed to measure excellence in each of our major programs.

CONTRACTOR METRICS PROCESS ACTION TEAM: A team of industry representatives and NASA personnel is developing a set of contractor metrics that will measure the performance of NASA's major contractors. The measurements will focus on areas such as cost, schedule, technical performance, socio-economic gains, quality, management, and continuous performance. A regular "report card" will be issued, showing how industry is performing. Implementation and reporting of results will begin in January 1993.

MINORITY BUSINESS RESOURCE ADVISORY COMMITTEE: NASA's new Minority Business Resource Advisory Committee will help identify small and disadvantaged businesses (SDB), including women-owned businesses, that can provide support to NASA. This committee will also direct SDBs to available resources for financial, contracting, and technical advice.

SES BONUSES AND APPRAISALS PROCESS ACTION TEAM: A team is evaluating and revising the NASA implementing procedures best calculated to achieve the results and achieve the aims of the SES bonus/appraisal system.

POSITIONS AND TITLES PROCESS ACTION TEAM: A process action team is reviewing the process by which titles are assigned to HQ senior positions. Results are to be reported before year-end.

ADMINISTRATOR'S CORRESPONDENCE PROCESS ACTION TEAM: A team has been commissioned to optimize the timeliness, quality, and efficiency of the Administrator's non-Congressional correspondence. The initial recommendations have been approved and implementation is ongoing.

October 1992

NASA News

National Aeronautics and
Space Administration

Washington, D.C. 20546
AC 202 453-8400

ISY

Dwayne C. Brown
Headquarters, Washington, D.C
(Phone: 202/358-0547)

Jim Doyle
Jet Propulsion Laboratory, Pasadena, Calif.
(Phone: 818/354-5011)

For Release October 15, 1992

NOTE TO EDITORS: N92-90

NASA/CONTRACTORS CONFERENCE SCHEDULED FOR OCT. 20-21

The Ninth Annual NASA/Contractors Conference on Quality and Productivity will take place at the Pasadena Center, Pasadena, Calif., on Oct. 20-21, 1992. The theme of this year's conference is "World Class Excellence: The Journey Continues." The event is expected to draw over 900 attendees.

The conference, hosted by the Jet Propulsion Laboratory in conjunction with the California Institute of Technology, both in Pasadena, will provide a forum to discuss and exchange ideas, success stories and lessons learned in the practical application of the principles of Total Quality Management that spearhead continuous improvement within organizational structures and processes.

Conference attendees will consist of top management officials from NASA, government, public and private industry, academia and the international community. NASA Headquarters Associate Administrator for Continuous Improvement Dr. Laura Broedling will give the opening keynote address.

A highlight of the event will occur when Acting Deputy Administrator Aaron Cohen announces the 1992 George M. Low NASA Trophy recipient(s), NASA's Quality and Excellence Award, at the evening banquet on Oct. 20.

This years finalists are:

* Cray Research, Inc., Customer Service, Engineering and Manufacturing Divisions, Chippewa Falls, Wisc.

* Honeywell Inc., Space and Strategic Systems Operation, Clearwater, Fla.

- more -

* IBM Federal Systems, Co. - Houston

* McDonnell Douglas Space Systems Co., Kennedy Space Center, Fla.

* Paramax Systems Corp., Space Systems Operation, Houston

* Rocket Research Co., Redmond, Wash.

* Stanford Telecommunications, Inc., Reston, Va. (Small Business)

* Technical Analysis, Inc., Houston (Small Business).

The award recognizes both NASA's large and small prime contractors, subcontractors and suppliers for outstanding achievement in quality and productivity improvement and Total Quality Management (TQM). Key goals of the award are to internalize quality and productivity practices and TQM processes throughout NASA and the agency's contractors and to transfer performance improvement methods of the award recipients to others.

Media interested in covering the event or requesting interviews should contact the Jet Propulsion Laboratory Public Affairs Office (818) 354-5011.

- end -

NASA News

National Aeronautics and
Space Administration

Washington, D.C. 20546
AC 202 453-8400

ISY

For Release

Bill Livingstone
Headquarters, Washington, D.C.
(Phone: 202/453-1898)

October 15, 1992

RELEASE 92-172

GOLDIN ANNOUNCES CHANGES IN NASA ORGANIZATION TO FOCUS AND STRENGTHEN PROGRAMS AND MANAGEMENT

WASHINGTON, D.C. -- Daniel S. Goldin today announced a series of structural changes at NASA to improve management and bring focus to programs that are essential to America's future.

"Of all the agencies in government, NASA has a unique responsibility to invest in the future to ensure there is hope and opportunity for future generations and to keep America on the cutting edge of technology," Goldin said.

"Today, I am announcing a series of structural changes to better focus NASA's programs, to streamline how we do business so we can meet the challenges ahead," Goldin said.

In preparation for today's announcement, Goldin said over the past 6 months he has traveled to NASA centers, visiting with hundreds of employees, worked with the red & blue teams, met with CEOs of America's top companies, met with small and disadvantaged companies, small entrepreneurial companies and reached out into minority and women-owned companies.

He has traveled abroad to meet with leaders on space policy, met personally with nearly 200 members of Congress and analyzed major reports such as the Augustine Report, the Paine Commission Report and the Rogers Commission Report. He also has reached out to academia and the science community.

"The past 6 months, I've reached deep into NASA to listen to the hopes and dreams of employees. I've listened to concerns expressed by America's leaders outside the agency," Goldin said.

- more -

"If there is universal agreement on one point it's that NASA cannot afford to fail, that it must be the preeminent technological leader of the world," Goldin said. "NASA must reach for the stars and bring back to America dual-use technology to improve life on Earth."

To achieve its goals, Goldin announced the following structural and managerial changes at NASA:

SPACE STATION FREEDOM

Strengthening the focus of management of Space Station Freedom (SSF) is of the highest priority for NASA. In a Sept. 17, 1992 speech, Goldin said he was "taking steps to ensure NASA's top talent is working on this program."

** Marty Kress will become Deputy Program Manager for Policy and Management, responsible for strengthening cooperation with the space station user community, international partners and the private sector. Marty's previous position was Assistant Administrator for Legislative Affairs.

"Marty Kress is one of NASA's best and brightest rising young 'stars,' who has successfully helped me steer the agency through difficult budget deliberations on Capitol Hill," Goldin said. "His talent is now needed for even greater challenges, to pull together, coordinate and integrate the scientific and commercial communities so they take full advantage of the opportunities aboard Space Station Freedom."

Marty Kress' appointment will allow Dick Kohrs, Space Station Associate Administrator, to focus his skills on the day-to-day development and construction of SSF.

** Mary Kerwin, Director Liaison Division, will become Acting Assistant Administrator for Legislative Affairs.

** Tom Campbell, formerly NASA Comptroller, will become the Chief Financial Officer for SSF to help ensure SSF keeps within its budget estimates.

"Tom Campbell is recognized as the strongest financial officer at the agency," Goldin said. "He's NASA's top talent, who will be responsible for keeping a watchful eye on the budget and schedule."

** Gary Allison, who was Deputy Comptroller, will become Acting Comptroller.

SCIENCE & TECHNOLOGY

NASA, which is recognized for its great scientific achievements, must strengthen its outreach to the science community to improve the integration and coordination of research.

** Len Fisk will be promoted to the new position of Chief Scientist for NASA. Len's previous position was Associate Administrator for Space Science and Applications.

"Len is one of NASA's most brilliant and outstanding scientists," Goldin said. "His formidable challenge will be to aggressively work with the scientific and engineering community, particularly academia, to fully involve them in our research goals".

"He will be responsible for forging a strong bond with the directors of research and development in corporate America to ensure NASA is getting the very best technology in all our science missions," Goldin said.

"Len, because of his outstanding communication abilities, will also be instrumental in explaining to the public the importance of NASA's research to improve life on Earth and to inspire humanity with wonderful scientific achievements," Goldin said.

EARTH AND PLANETARY SCIENCE

The Office of Science and Space Applications will be divided into two parts to bring focus to the programs.

** Shelby Tilford will become Acting Associate Administrator of Mission to Planet Earth. He previously was Director of Earth Sciences.

"Mission to Planet Earth is more than a duty, it's a moral commitment to future generations," Goldin said. "We must understand our environment -- separating natural from human causes and effects -- so policy makers can make decisions on hard data, not suppositions."

** Wes Huntress, previously Director of Solar System Exploration, will become Acting Associate Administrator of Planetary Science and Astrophysics.

"We must build and launch many more spacecraft that are smaller, faster and cheaper," Goldin said. "By studying our solar system and the universe, we will be able to better understand Earth's environment and its future and see if life has developed on other planets and understand how the planets formed."

AERONAUTICS

Goldin announced in a recent speech that NASA needs a better balance of programs between subsonics, National Aero/Space Plane hypersonics and high speed civil transport. In addition, NASA needs to develop a strategic plan to ensure we have the proper facilities to keep America's aerospace industry the world's leader. The Office of Aerospace and Space Technology will be divided to provide focus as specified below.

** Pete Petersen will become Special Assistant to the Administrator to develop a comprehensive and integrated long-term plan that identifies the critical facilities for aeronautics and space. He was Associate Administrator for Aeronautics And Space Technology.

"As the Augustine Report points out, NASA's infrastructure is critical to meeting its mission goals," Goldin said.

"NASA must develop an integrated facilities plan, in coordination with other government agencies and private industry, to construct world class facilities for aeronautics and space."

"We must avoid duplication in government and industry to achieve maximum results and stretch taxpayer's dollars," Goldin said.

** Cecil Rosen, who was Director for Aeronautics, will become Acting Associate Administrator for the Office of Aeronautics.

** Gregory Reck will become Acting Associate Administrator for the new office of Advanced Concepts And Technology.

** Courtney Stadd will become Acting Deputy Associate Administrator for the new office of Advanced Concepts And Technology.

"NASA needs to attract and work with America's greatest researchers and entrepreneurs in academia and industry," Goldin said. "This office will push America's technological frontiers. It will be the catalyst for innovation and commercialization of technology and for transferring technology to create jobs, opportunity and creatively commercialize space."

As part of the restructuring, the Office of Commercial Programs will become part of this new division.

* * Jack Mannix, who was Assistant Administrator for the Office of Commercial Programs, will become Associate General Counsel for Intellectual Property.

RUSSIAN PROGRAMS

* * Sam Keller, Associate Administrator for Russian Programs will be on Special Assignment.

"Because of Sam Keller's talent and hard work, NASA has been able to sign far-reaching contracts with Russia in record speed," Goldin said. "He now will be moving on to new and exciting challenges."

- end -

NASA News

National Aeronautics and
Space Administration

Washington, D.C. 20546
AC 202 453-8400

ISY

For Release

Ed Campion
Headquarters, Washington, D.C.
(Phone: 202/453-8536)

October 19, 1992

EDITORS NOTE: N92-91

STS-52 NASA NEWSROOM HOURS AND PROCEDURES

During Space Shuttle Mission STS-52, the NASA newsrooms supporting the flight will have extended hours of operation. However, staffing and budget constraints will force some newsrooms to be closed in the evenings and on weekends.

To permit media to ask questions in daily mission press briefings, the following procedures are to be used when a newsroom is closed, and it is not possible for the media to ask questions directly of press conference briefers.

Media should write down their name, affiliation and question(s) and facsimile this information to the newsroom at the NASA center originating the briefing at least 1/2 hour prior to the start of the news conference. Facsimile numbers are listed in this release. The appropriate briefer will read and answer the question over NASA select TV or refer the question to the appropriate expert. Newsroom personnel WILL NOT forward verbal questions to the briefing participants.

Listed below are the times each newsroom will be open along with contact phone numbers.

Kennedy Space Center, Fla.

Operating Hours	
L-2	6:00 a.m. - 6:00 p.m. Eastern
L-1	6:00 a.m. -
Launch day	- 6:00 p.m. Eastern
On-Orbit (weekdays)	7:00 a.m. - 6:00 p.m. Eastern
On-Orbit (weekends)	10 a.m. - 4:00 p.m. Eastern
Landing day	Landing - 4 hours to Landing + 4 hours Eastern

- more -

Phone Numbers

Newsroom:	407/867-2468
Facsimile:	407/867-2692
Code-A-Phone:	407/867-2525

After Hours:
Dick Young - 904/423-1800
Karl Kristofferson - 407/267-9302

Johnson Space Center, Houston

Operating Hours

L-2	8:00 a.m. - 5:00 p.m. Central
L-1	8:00 a.m. - 5:00 p.m. Central
Launch day	6:00 a.m. - 6:00 p.m. Central
On-Orbit (weekdays)	6:00 a.m. - 6:00 p.m. Central
On-Orbit (weekends)	6:00 a.m. - 6:00 p.m. Central
Landing day	4:30 a.m. - 10:00 a.m. Central

Phone Numbers

Newsroom:	713/483-5111
Facsimile:	713/483-2000
Code-A-Phone:	713/483-8600

After Hours:

Jack Riley	713/471-0624
Barbara Schwartz	713/474-4769

Marshall Space Flight Center, Huntsville, Ala.

Operating Hours

L-2	8:00 a.m. - 5:00 p.m. Central
L-1	8:00 a.m. - 5:00 p.m. Central
Launch day	8:00 a.m. - 5:00 p.m. Central
On-Orbit (weekdays)	8:00 a.m. - 5:00 p.m. Central
On-Orbit (weekends)	Closed
Landing day	Closed (scheduled to land on Sunday)

Phone Numbers

Newsroom:	205/544-0034
Facsimile:	205/544-5852
Code-A-Phone:	205/544-6397

After Hours:
Dom Amatore - 205/461-7833
Jerry Berg - 205/534-4968

Dryden Flight Research Facility, Edwards, Calif.

Operating Hours	
L-2	7:30 a.m. - 4:00 p.m. Pacific
L-1	7:30 a.m. - 4:00 p.m. Pacific
Launch day	7:30 a.m. - 4:00 p.m. Pacific
On-Orbit (weekdays)	7:30 a.m. - 4:00 p.m. Pacific
On-Orbit (weekends)	Closed
Landing day	Landing - 2 hours to Landing + 4 hours Pacific

Phone Numbers	
Newsroom:	805/258-3449
Facsimile:	805/258-3566
Code-A-Phone:	805/258-2564

After Hours:
Nancy Lovato - 805/948-2957
Don Haley - 805/943-5817

- end -

NASA News

National Aeronautics and
Space Administration

Washington, D.C. 20546
AC 202 453-8400

ISY

Michael Braukus
Headquarters, Washington, D.C.
(Phone: 202/358-1547)

Jerry Berg
Marshall Space Flight Center, Huntsville, Ala.
(Phone: 205/544-0034)

For Release
October 19, 1992

RELEASE: 92-173

FRENCH, JAPANESE PAYLOAD SPECIALISTS SELECTED FOR IML-2 MISSION

NASA today announced that Dr. Chiaki Mukai, Ph.D and M.D., of the Japanese National Space Development Agency, has been designated as the prime payload specialist for the second International Microgravity Laboratory mission (IML-2) scheduled for launch in July 1994.

Dr. Jean-Jacques Favier, a scientist with the French Atomic Energy Commission, has been selected as an alternate payload specialist. During the mission, Dr. Favier will be one of the principal communicators with the laboratory. As a backup payload specialist, he also will train for the payload mission so that he could substitute for a flight payload crew member should one be unable to fly the mission. Dr. Favier was selected by the French Space Agency as a candidate astronaut in 1985.

"The selection of Dr. Mukai and Dr. Favier to the crew of the IML-2 mission truly accents the international nature of the mission," said NASA Administrator Daniel Goldin. "I was pleased to have the honor of informing both the Japanese and French space agencies of their selection."

The first mission in the series, IML-1, flew in January 1992 on the STS-42 flight of Columbia. For IML-2, an international team consisting of 80 principal investigators from more than 13 countries will focus on materials and life sciences, two disciplines needing crew participation and access to reduced gravity. IML-2 will use the Spacelab long module and is a dedicated microgravity mission.

The overall objective of the IML-2 mission is to conduct investigations in applications, science and technology that require the low-gravity environment of Earth orbit flight and a stable vehicle attitude over an extended-duration mission.

- more -

The mission plan calls for the Space Shuttle Columbia to fly in a 160 nautical mile-high, 28.5 degree orbit. Mission duration is planned for 13 days.

The orbiter will fly in a "gravity gradient" stablized attitude (tail toward Earth), thereby producing the least gravitational disturbances on the Spacelab laboratory during the flight.

As previously announced, NASA astronaut Richard Hieb will serve as payload commander and mission specialist for IML-2. Other crew members will be named in the future.

The IML series is intended as an ongoing international research program in materials and life sciences in a microgravity environment. The program is managed by NASA's Office of Space Science and Applications, Washington, D.C. Wayne Richie is the IML-2 Program Manager, and Dr. Robert Sokolowski, NASA Headquarters, is the Program Scientist.

The IML-2 Mission Manager is Lanny Upton, and the Mission Scientist is Dr. Robert Snyder, both from the Marshall Space Flight Center, Huntsville, Ala..

- end -

NASA News

National Aeronautics and
Space Administration

Washington, D.C. 20546
AC 202 453-8400

ISY

For Release

Jim Cast
Headquarters, Washington, D.C.
(Phone: 202/453-1142)

October 20, 1992

Dolores Beasley
Goddard Space Flight Center, Greenbelt, Md.
(Phone: 301/286-2806)

RELEASE: 92-174

NASA REOPENS RESERVATIONS QUEUE FOR GET AWAY SPECIALS

NASA today announced that the Small Self Contained Payloads (SSCP) program, popularly known as the Get Away Special (GAS) program, is now accepting new applications for payload reservations.

The program offers standard canisters to customers wanting to carry out scientific research on Shuttle flights on a space-available basis for a nominal fee. Since the first Get Away Special payload flew on Space Shuttle Columbia 10 years ago, 87 GAS payloads have flown on 18 missions, representing customers from industry, educational institutions, domestic and foreign governments, as well as from individuals.

Reopening the reservations queue for GAS payloads follows NASA Administrator Daniel Goldin's signing of an updated policy on small self contained payloads. The updated policy was published in the Federal Register on Sept. 9.

The announcement was made at the Shuttle Small Payloads Symposium being held at the Sheraton Greenbelt Hotel in New Carrollton, Md. The symposium is being sponsored by NASA's Office of Space Flight and the Goddard Space Flight Center, Greenbelt, Md.

Under the revised policy, prices for standard services would be $27,000 for an SSCP payload weighing 200 pounds (90.72 kg) and a volume of 5 cubic feet (.142 cubic meters), $14,000 for a payload weighing 100 pounds (45.36 kg) and a volume of 2.5 cubic feet and $8,000 for a payload weighing 60 pounds (27.22 kg) and a volume of 2.5 cubic feet (.071 cubic meters). These prices compensate for the impact of inflation from fiscal years 1975 through 1991.

- more -

NASA soon will publish in the Federal Register a related policy whereby domestic educational institutions will have an option to qualify for reduced SSCP prices. Domestic educational institutions would pay $10,000 for an SSCP payload weighing 200 pounds and a volume of 5 cubic feet, $5,000 for a payload weighing 100 pounds and a volume of 2.5 cubic feet and $3,000 for a payload weighing 60 pounds and a volume of 2.5 cubic feet.

SSCP experiments must be of a scientific research and development nature and are flown on a space-available basis on Space Shuttle missions. Most recently, 9 GAS experiments from 5 countries flew on the STS-47 Spacelab J mission in September.

The SSCP project is managed by NASA's Goddard Space Flight Center. Program management is located at Headquarters' Office of Space Flight.

Persons interested in obtaining general SSCP program information or an SSCP reservation to fly a payload on a Space Shuttle mission should begin by calling Robert Tucker, Office of Space Flight, at 202/453-2347. Persons with programmatic or technical questions may call Lowell Primm, GAS Program Manger, Office of Space Flight, at 202/453-1922.

-end-

NASA News

National Aeronautics and
Space Administration

Washington, D.C. 20546
AC 202 453-8400

ISY

For Release

Brian Dunbar
Headquarters, Washington, D.C.
(Phone: 202/358-1547)

October 20, 1992

Jessie Katz
Goddard Space Flight Center, Greenbelt, Md.
(Phone: 301/286-5566)

RELEASE: 92-175

NASA/ITALIAN SATELLITE TO STUDY EARTHQUAKES AND GEOLOGY

Whether they like it -- or even know it -- folks in sunny southern California are now on the move toward frigid Alaska where their descendants are expected to arrive in about 150 million years.

They are riding on one of the crustal plates that constitute the earth's surface and it is moving north towards a collision with Alaska.

On Oct. 22, NASA will launch an Italian-built satellite aboard the Space Shuttle Columbia to monitor the motion of the crustal plates.

The primary purpose is not to check the accuracy of predictions like the California-Alaska and similar pending collisions but to better understand earthquakes and volcanic eruptions caused by plates sliding past one another.

"Most earthquakes and volcanoes are located along the boundaries between Earth's crustal plates," said Miriam Baltuck, Program Scientist for the satellite, the second Laser Geodynamics Satellite (LAGEOS II). "To be able to mitigate the damage they can cause, we must understand the processes that create them. LAGEOS II will help us do that."

Columbia also will carry the first United States Microgravity Payload (USMP-1), which will conduct experiments in how materials change state in the absence of gravity.

- more -

SATELLITE LASER RANGING

Like LAGEOS I, launched in 1976 and still in service, LAGEOS II is dedicated to satellite laser ranging (SLR). In SLR, ground-based lasers transmit intense, short pulses of light to a satellite equipped with retroreflectors. The retroreflectors on the surface of LAGEOS II are three-dimensional prisms that reflect the laser back to its source.

By recording the round-trip travel time of the pulse, scientists can determine the location of the laser station on the Earth's surface. Over time, scientists can determine how the laser stations around the world have moved and therefore measure how the plates of the Earth's crust are moving.

"Changes in the round-trip time are due either to very tiny changes -- as small as a millimeter -- in the ground station's location or to changes in the satellite's orbit which respond to changes in the Earth's gravity field," said Dr. Baltuck.

THE SATELLITE

The Italian space agency, Agenzia Spaziale Italiana (ASI), built LAGEOS II from NASA drawings and hardware. It is a spherical satellite made of aluminum with a brass core. LAGEOS II is only 24 inches (60 cm) in diameter, yet weighs approximately 900 pounds (405 kg). This compact, dense design was selected to make the satellite's orbit as stable as possible so that its position can be determined with a high degree of accuracy.

The satellite is covered with 426 retroreflectors, about 1.5 inches (3.8 cm) in diameter. Each retroreflector is a prism that reflects a light beam back to its source.

GSFC and ASI have assembled 27 teams of investigators to work on LAGEOS II. They represent the U.S., Italy, Germany, France, the Netherlands and Hungary. The investigations planned for LAGEOS II include plate tectonics -- the motion of the plates of the Earth's crust -- the Earth's rotation, Earth's gravity and the accurate determination of the length of the day.

"LAGEOS II is a joint mission of NASA and ASI," said Dr. Baltuck, "which is important because global monitoring of the Earth requires global participation. About 30 countries will be tracking LAGEOS II from 65 sites around the world."

PREVIOUS RESULTS

The global network of more than 30 SLR stations have provided a basic framework for determining plate motion, confirming the expected motion for most plates. SLR studies have shown how stress is distributed and stored within the boundary zones between the two large plates divided by California's San Andreas Fault. LAGEOS I data have shown that the Hawaiian island of Maui is moving toward Japan at approximately 2.8 inches (7 cm) a year and away from South America at 3.1 inches (8 cm) a year.

Adding a second LAGEOS satellite will provide even more results, said Dr. Baltuck. "LAGEOS II will double the number of measurements over our most important sites," she said. "It will also reduce the problems caused by cloudy weather and will enhance our modeling of the Earth's gravity field. Its orbit has been designed to improve coverage of the Mediterranean, a poorly understood and geologically complex area that is naturally of great interest to our Italian partners."

PLATE TECTONICS

The theory of plate tectonics tries to explain how the continents got to their current positions and predicts where they will be in the future. Scientists theorize that up until about 200 million years ago there was one giant super-continent where the Atlantic Ocean is today. It was called Pangaea, which means "all lands." The word is a combination of the prefix pan, which means all, and the Greek word gaea, which means land or Earth.

Then, about 180 million years ago, Pangaea started to break up into several continents. The plates carrying the continents drifted away from each other with a low layer of rock forming between the plates. Today, the plates comprise the solid outer 60 miles (100 km) of the Earth.

The plates move slowly, generally not faster than 6 inches (15 cm) a year. To cite one example, North America and Europe are moving apart at about 1.2 inches (3 cm) a year. Today, they are about 3,000 miles (4,828 km) apart. When the two continents originally split, the low layer of rock between the continents grew, sank and was gradually inundated to become the Atlantic Ocean.

Although the plates' motions are slow when averaged over time, the effects of their short-term drastic movements can be catastrophic. Plates may bump into one another, spread apart or move horizontally past one another, causing earthquakes, building mountains or triggering volcanoes.

OTHER INVESTIGATIONS

LAGEOS II scientists will also use the data to look at changes in the location of the Earth's axis of rotation which causes a movement or "wobble" at the north pole. The Earth is not perfectly round, and the material beneath the Earth's surface and its atmosphere is not equally distributed around the imaginary line around which the Earth spins. This causes a small "wobble" in the Earth's rotation much like the motion of a child's top. The spin rate varies by only a few thousandths of a second which changes the length of the Earth's day.

Understanding the Earth's wobble and rotation rate provides important insight into how mass shifts above and within the Earth. Through measurements using the LAGEOS satellites, scientists can detect changes in polar motion to an accuracy of 2 inches (5 cm) and changes in the length of the day to within one ten-thousandth of a second.

The Earth's gravity plays a large part in controlling the orbit of a satellite. Because the Earth is neither perfectly round nor equally dense through its interior, gravity varies from place to place around the globe. In addition, tides, caused by the gravity of the Sun and the Moon pulling on the Earth, cause the Earth's mass to shift within a period of hours. Using laser ranging with the LAGEOS satellites, scientists can measure large-scale changes in gravity. Studying these changes helps scientists understand better the properties, as well as the strength and behavior of materials deep within the Earth.

- end -

Note to Editors: Two illustrations to accompany this story are available to media. The first is an artist's rendering of the LAGEOS I satellite (identical to LAGEOS II) illustrating the basics of satellite laser ranging. The second is an artist's rendering of the position of the continents 200 million years ago, today and 10 million years from now. These images may be obtained from NASA's Audio/Imaging Branch by calling 202/453-8375.

	Color	B&W
LAGEOS I	78-HC-473	78-H-603
Continents	78-HC-477	78-H-607

NASA News

National Aeronautics and
Space Administration

Washington, D.C. 20546
AC 202 453-8400

ISY

For Release

Brian Dunbar
Headquarters, Washington, D.C.
(Phone: 202/358-0873)

October 21, 1992

Jim Wilson
Jet Propulsion Laboratory, Pasadena, Calif.
(Phone: 818/354-5011)

RELEASE: 92-176

SHUTTLE FLIGHT TO TEST NOBEL-WINNING PHYSICS THEORY

Scientists will test a Nobel Prize-winning theory which may have applications ranging from hurricane dynamics to superconductivity during Space Shuttle Columbia's STS-52 mission, scheduled to lift off Oct. 22.

The Lambda-Point Experiment (LPE), part of NASA's first United States Microgravity Payload (USMP-1), will study the strange behavior of helium at its critical temperature of 2.177 degrees above absolute zero (minus 459 degrees F).

"Cryogenics and ultra-sensitive thermometry (measuring billionths of a degree) will be used to study the mysteries of changes in material properties during phase transitions," said Reuben Ruiz, LPE Manager for NASA's Jet Propulsion Laboratory, Pasadena, Calif.

Phase transitions, such as those between water and steam or ice and water, are common in nature and technology and are well understood with certain exceptions. The transition between helium's liquid state and its rare superfluid state, in which the helium flows without friction, is the target of the LPE's investigation.

This experiment is the second flight of JPL's Low Temperature Research Facility aboard the Shuttle orbiter to provide the needed supercold temperatures and the microgravity environment. The experiment itself was devised by Dr. John Lipa, a Stanford University physicist and the LPE Principal Investigator.

Lipa's group developed a very precise thermometer and other experimental equipment to measure the unusual thermal properties predicted by Nobel Laureate Kenneth Wilson's "Renormalization Group Theory."

- more -

This theory is believed to apply to physics problems ranging from the flow of fluids (including the winds of hurricanes) to chemical bonding and superconductivity. The theory provides a mathematical explanation of how interactions at the atomic level can translate into phenomena observed at much larger scales.

The theory can be tested more rigorously with helium at the transition temperature in very low gravity. The heat capacity of the helium, the amount of energy required to increase its temperature, is predicted to increase dramatically very close to the transition.

On Earth, experiments have been limited by the effects of gravity on the sample's own weight. In the microgravity of space flight, it should be possible to test Wilson's theory 100 times more accurately than the best ground-based experiments. In addition, the remote control of the experiment by scientists on the ground will help develop experiment capabilities that will be used on Space Station Freedom.

The LPE experimental apparatus was built for Stanford University by Ball Aerospace Systems, and the Low Temperature Research Facility was developed and built by JPL. The system was integrated and tested by JPL. USMP-1 is managed by NASA's Marshall Space Flight Center, Huntsville, Ala., where the experiment's ground operations will be conducted.

USMP-1 also will carry a U.S.-French experiment to study the effects gravity has on metals and semiconductors as they solidify on Earth and in orbit, called MEPHISTO. A third instrument, the Space Acceleration Measurement System will measure vibrations in the Shuttle to account for them in the other two experiments.

STS-52 also will deploy the second Laser Geodynamics Satellite, an Italian satellite to study the movements of the Earth's crust and other phenomena.

- end -

NASA News

National Aeronautics and
Space Administration

Washington, D.C. 20546
AC 202 453-8400

ISY

For Release

Drucella Andersen
Headquarters, Washington, D.C.
(Phone: 202/453-8613)

Paula Cleggett-Haleim
Headquarters, Washington, D.C.
(Phone: 202/358-0883)

October 21, 1992

RELEASE: 92-177

HIGH-SPEED COMPUTING TO ADVANCE EARTH, SPACE SCIENCE

NASA has chosen 29 supercomputing research proposals that will pave the way for a revolution in the way scientists study the Earth and space.

The goal is to achieve computational capabilities far beyond those of today's machines, enabling researchers to produce realistic simulations of phenomena such as the interaction of Earth's oceans, air and land masses and reconstructions of the evolution of stars, galaxies and the universe.

"This is the first time a broad spectrum of the country's best and brightest people will engage in leading-edge supercomputing research for Earth and space science applications," said Lee Holcomb, Director for High Performance Computing and Communications (HPCC) at NASA Headquarters, Washington, D.C. "We deliberately selected a diversity of institutions, applications and computing platforms to get the best return on our investment."

Eight of the projects will involve teams of space and computer scientists to create computer models and computing techniques that can attack today's intensive, large-scale problems in Earth and space science -- the so-called "Grand Challenges." The other projects are focused efforts that address specific issues in algorithms and computational methods as they apply to Earth and space studies.

The proposals selected came from a wide variety of sources. The investigators and collaborators represent 27 academic institutions, 9 federal laboratories and 3 private firms.

The research will be done under the Earth and Space Sciences project of the HPCC initiative, a leading-edge effort to produce a 1000-fold increase in supercomputer speed and a 100-fold improvement in communications capability by 1996.

- more -

The 8 large projects will begin early in calendar year 1993. The others will start in two phases: 10 early in 1993 and 11 in the last quarter of that year. Total funding for the efforts is estimated at $10.5 million through fiscal year 1995.

"Combining computer science and technology with space science gives us the opportunity to bring the two communities together and for computer scientists to take an increased role in helping us meet our research goals," said Joe Alexander, Assistant Associate Administrator for Space Science and Applications at NASA Headquarters.

WHY HIGH PERFORMANCE COMPUTING?

These projects will use "parallel processing" computers--machines that use up to thousands of processors to work simultaneously on a problem. These processors are simpler than those in traditional supercomputers but they allow faster computation since there are many more of them.

The advances from these projects will be vital to Earth and space scientists because current supercomputers are neither fast nor powerful enough to digest the volume of data expected in the 1990s or to model the full complexity of many challenging scientific problems.

NASA's Goddard Space Flight Center, Greenbelt, Md., manages the HPCC Earth and Space Sciences project with assistance from the Jet Propulsion Laboratory, Pasadena, Calif., for NASA's Office of Aeronautics and Space Technology and Office of Space Science and Applications.

The winning proposals broken down by state are: Maryland, 6; California, 4; Illinois, 4; Texas, 4; Arizona, 2; and one each from the District of Columbia, Hawaii, Iowa, Louisiana, Massachusetts, Michigan, New Mexico, Utah and Washington.

- end -

NOTE TO EDITORS: A complete list of the selected proposals, principal investigators and investigating teams is available by calling 202/453-8400.

NASA News

National Aeronautics and
Space Administration

Washington, D.C. 20546
AC 202 453-8400

ISY

Dwayne C. Brown
Headquarters, Washington, D.C.
(Phone: 202/358-0547)

Jim Doyle
Jet Propulsion Laboratory, Pasadena, Calif.
(Phone: 818/354-5011)

For Release
October 21, 1992

RELEASE: 92-178

NASA PRESENTS LOW TROPHY TO IBM AND HONEYWELL

IBM Federal Systems Co., Houston, and Honeywell, Inc., Space and Strategic Systems Operation, Clearwater, Fla., have been named recipients of the 1992 George M. Low Trophy - NASA's Quality and Excellence Award.

NASA Acting Deputy Administrator Aaron Cohen announced the selection last night at the Ninth Annual NASA/Contractors Conference on Quality and Productivity in Pasadena, Calif.

"These companies have not only made the commitment to improve, but they have demonstrated the courage to be measured on their progress," Cohen said.

The Low Trophy recognizes NASA's prime contractors, subcontractors and suppliers for outstanding achievements in quality and productivity improvement and Total Quality Management (TQM). Key goals of the award are to internalize quality and productivity practices and TQM processes throughout NASA and the agency's contractors.

"The success of NASA's mission is dependent on the quality of the products and services our suppliers provide. The Low Trophy recognizes firms who are truly enhancing their overall quality," said Dr. Laurie Broedling, Associate Administrator for the Office of Continuous Improvement.

IBM Federal Systems has supported every crewed space flight. Support consists of both ground and onboard hardware and software, which include command and control, communications and administrative functions.

-more-

Honeywell, Inc., built the flight control systems for the Space Shuttle and also built and rebuilt the original and improved main engine controllers. Honeywell also is providing stabilization and control systems for NASA's Space Station Freedom.

The other finalists for the 1992 award were:

* Cray Research, Inc., Customer Service, Engineering and Manufacturing Divisions, Chippewa Falls, Wisc.

* McDonnell Douglas Space Systems Co., Kennedy Space Center, Fla.

* Paramax Systems Corp., Space Systems Operation, Houston.

* Rocket Research Co., Redmond, Wash.

* Stanford Telecommunications, Inc., Reston, Va. (Small Business)

* Technical Analysis, Inc., Houston, (Small Business)

Award criteria, developed by NASA in conjunction with the American Society for Quality Control, Milwaukee, were used to judge nominees on performance achievements and improvements in customer satisfaction, quality and productivity levels. Emphasis was placed on management commitment, goals and measures, communication, health and safety, work force training, award recognition and subcontractor involvement.

Information on the 1992 award program can be obtained by contacting the NASA Headquarters Office of Continuous Improvement, 600 Independence Ave., S.W., Washington, D.C. 20546 (phone: 202/453-8415).

-end-

NASA News

National Aeronautics and
Space Administration

Washington, D.C. 20546
AC 202 453-8400

ISY

For Release

Brian Dunbar
Headquarters, Washington, D.C.
(Phone: 202/358-1547)

October 21, 1992

Keith Koehler
Wallops Flight Facility, Wallops Island, Va.
(Phone: 804/824-1579)

RELEASE: 92-179

NASA FINDS UNEXPECTED PACIFIC OCEAN PLANT PRODUCTIVITY

NASA researchers, expecting to see a virtually barren ocean, found unexpectedly high productivity of microscopic plants near the equator in the Pacific Ocean during a recent airborne study to increase understanding of these plants in the region.

Dr. Frank Hoge, principal investigator from the Wallops Flight Facility, said the researchers were expecting to see limited plant productivity in the Pacific Ocean as compared to the Atlantic. However, they found a large patch of the microscopic plants, called phytoplankton, with concentrations five to six times higher than that typically found in the Atlantic, Hoge said.

Phytoplankton play an important role in the absorption of carbon dioxide from the atmosphere. Carbon dioxide is the principal "greenhouse gas" thought to be responsible for most global warming.

The NASA researchers gathered more than 35 hours of data over the Pacific using the Airborne Oceanographic Lidar (AOL) and other instruments aboard the P-3B aircraft operated by the NASA Goddard Flight Center's Wallops Flight Facility, Wallops Island, Va. The measurements were taken in August and September in conjunction with the University of Washington scientific research vessel "Thomas G. Thompson."

The measurements were part of the Joint Global Ocean Flux Study (JGOFS), co-sponsored with the National Science Foundation (NSF). The airborne data were linked with observations from the Space Shuttle to guide NSF ships to areas of high productivity.

- more -

The phytoplankton patches, which could be seen with the naked-eye, were located 140 degrees West longitude and 2 degrees north of the Equator. The patches were at least 100 times more concentrated than expected in the equatorial Pacific Region, said Hoge.

Hoge said the high phytoplankton concentration in the Pacific was probably the result of unusual ocean circulation that built up nutrients, which the plants need for growth, from the bottom of the ocean. The high Pacific concentrations decreased in the days following the initial discovery, he said.

According to Hoge, nutrient concentrations, sunlight and phytoplankton seed are similar in the two oceans. However, phytoplankton in the Atlantic is more abundant than in the Pacific, according to Hoge.

Mission to Improve Future Satellite Data

Hoge said the researchers gathered more data on this mission than on previous similar missions. They received good data on the phytoplankton as well as information on the dissolved organic matter in the ocean. The organic matter, similar to the brown watery material left on cars from dead wet tree leaves, interferes with gathering accurate satellite phytoplankton measurements. This interference is caused by absorption of the same colors of sunlight as phytoplankton.

The Wallops instruments on the aircraft allowed researchers to survey large stretches of the ocean. Hoge said the researchers used active and passive data-collection techniques that will help them develop analytical tools for future satellites that will map phytoplankton concentrations on a world-wide scale.

Satellites measure changes in ocean color that indicate where concentrations of phytoplankton are located. The data gathered from the Pacific mission and previous Atlantic missions will "give us a better understanding of how we can generalize the data. Once you have a good understanding of the Atlantic and Pacific colors, then you can generalize to other waters," Hoge said.

The researchers are now developing computer models that will be used in analyzing data from future satellite instruments, such as the Sea-viewing Wide Field Spectrometer to be flown in mid-1993, as part of NASA's Mission to Planet Earth.

- end -

NASA News

National Aeronautics and
Space Administration

Washington, D.C. 20546
AC 202 453-8400

ISY

For Release

Barbara E. Selby
Headquarters, Washington, D.C.
(Phone: 703/358-1983)

October 23, 1992

RELEASE: 92-180

SHUTTLE MISSION FEATURES INNOVATIVE COMMERCIAL EXPERIMENTS

Commercially-sponsored experiments aboard Space Shuttle Columbia (STS-52) will examine a potential treatment for osteoporosis, material crystals to increase the speed of computers, protein crystals to determine the molecular structure of "alfa-2b interferon" used in the treatment of some cancers and experiments on microgravity effects on astronauts.

"These experiments reflect the increasing interest and willingness of U.S. industry to invest and participate in commercial research using the benefits of microgravity to develop superior products and services," said Assistant Administrator for Commercial Programs Jack Mannix.

NASA's Office of Commercial Programs is sponsoring these experiments to support the agency's Commercial Development of Space initiatives.

PHYSIOLOGICAL SYSTEMS EXPERIMENT-2 (PSE-2)

This experiment is the result of a collaboration between Merck & Company, Inc., West Point, Pa., and the Center for Cell Research (CCR), a NASA Center for the Commercial Development of Space (CCDS) at Pennsylvania State University, University Park, Pa.

"The goal of the experiment is to see if an experimental compound we're developing will prevent or slow osteoporosis from developing in microgravity during space flight," said Roy Walker, Manager, Scientific Information with Mercke & Co., Inc.

"If it does, the compound may be a useful treatment for many people on Earth who suffer bone loss from being bedridden for long periods of time due to accidents or paralysis," Walker said.

The experiment also may have direct application in space as a preventive for bone loss that might effect astronauts on extended flights.

- more -

In this experiment, six healthy adolescent male albino rats will be treated before flight with the experimental anti-osteoporotic compound. An untreated control group of rats also will be aboard Columbia. Both groups will be housed in self-contained enclosures requiring no interaction from astronauts, although a clear plastic cover on the enclosure will allow astronauts to inspect the rats' conditions during the flight.

"We are proud to be working with Merck & Co., Inc., in this pioneering effort. Merck is the world's largest research-oriented pharmaceutical company and the industry leader. We believe that Merck's example will be an important stimulus to other companies to become involved in microgravity projects," said Penn State's CCR Director Dr. W. C. Hymer.

CRYSTAL BY VAPOR TRANSPORT EXPERIMENT (CVTE)

This Shuttle flight will mark the first time that astronauts will operate the CVTE crystal growth furnace in orbit to learn how to grow better industrial crystals.

"This experiment is important to the semiconductor industry because the ability of semiconductors to process and store information is dependent on the quality of the crystals used," said Boeing CVTE Program Manager Barbara Heizer.

"Thus, large, uniform crystals grown during space flight may lead to greater speed and capability of computers, sensors and other electronic devices," Heizer said.

"For the first time, Shuttle astronauts will be able to watch the crystals in the furnace and make adjustments during the process to grow the largest, purest and most uniform crystals possible," said Cindy Naucler, a member of the Boeing Defense & Space Group, Missiles & Space Division, Kent, Wash., team that developed the CVTE payload with NASA.

The CVTE payload is designed to demonstrate the technology of a crystal growth furnace in the microgravity environment of space. The furnace will use a vapor transport process to produce cadmium telluride crystals that are expected to be as large in diameter as a dime. Previous crystal-growth facilities only have grown samples the size of a pencil eraser.

Shuttle crew members Bill Shepherd and Mike Baker completed extensive training with Boeing scientists to learn to operate the CVTE equipment. By having the astronauts monitor and observe the on-orbit crystal growth, it is believed that they will better control the process and interpret the data to ultimately produce superior crystals.

COMMERCIAL PROTEIN CRYSTAL GROWTH (CPCG)

This experiment is designed to use a Protein Crystallization Facility (PCF) in microgravity to obtain high-quality crystals for potential protein pharmaceutical development.

Using the PCF, researchers will study the crystallization of the biologically important molecule, alfa-2b interferon, an anti-viral, anti-cancer agent with approval pending for several novel theraputic uses, such as hepatitus, multiple myeloma and as an adjunct to AIDS therapy.

The PCF consists of special equipment that, prior to launch, is filled with the alfa-2b interferon and housed in a thermal enclosure device, programmed to control the temperature of the protein solution. The PCF, developed by the Center for Macromolecular Crystallography (CMC), processes relatively large batches of protein.

The STS-52 crew will activate the experiment shortly after achieving orbit. A gradual temperature change in the thermal enclosure will occur over several days, causing the protein solution to form protein crystals. Once activated, the payload will require no further interaction except for periodic monitoring, and no modifications for landing.

The protein sample is provided by the CMC and the Schering-Plough Research Institute, Bloomfield, N.Y. The CMC, a NASA CCDS located at the University of Alabama at Birmingham, has managed and developed protein crystal activities with growing success since 1985.

"Increased success and promising results from commercial protein crystal growth activities are on the rise," said Dr. Charles Bugg, Principal Investigator for PCG activities and Director of the CMC. "The success achieved to date is directly attributable to the far-reaching research efforts and cooperation between the scientists of the CMC and its industry affiliates."

Protein pharmaceuticals -- such as insulin, human growth hormone and tissue plasminogen activator (a "clot buster" for heart attack victims) -- have been used successfully in patient care for the past decade.

Initial analysis of protein crystals grown during a 2-week Shuttle mission last June indicate that about 40 percent of the proteins produced larger and higher quality crystals than those produced on the ground. The crystals' increased size, quality and yield compared to results obtained in previous missions are attributed to the extended period of time for crystal growth provided by the extended length of the Shuttle mission.

COMMERCIAL MDA ITA EXPERIMENTS-1 (CMIX-1)

The results of research focusing on how cell structure and function are altered in microgravity could contribute to remedies for some physiological problems experienced by astronauts during space flight.

The problems include bone demineralization, muscle atrophy, cardiovascular deconditioning, reduced immune cell response and decrease in red blood cell count, according to Dr. Marian Lewis, a senior research associate at the University of Alabama in Huntsville (UAH) and Manager of the CMIX-1 project. The CMIX-1 experiments were developed by the Center for Materials Development in Space (CMDS), a NASA CCDS located at UAH.

Some of the CMIX-1 experiments will use human, mouse and frog cells to learn how the human body responds to living in the weightless environment of space flight. The cells will be maintained at a constant temperature and chemically stimulated to grow in microgravity. Their growth will be stopped before the Shuttle reenters the Earth's gravity so that researchers can analyze the cells' response to growth in microgravity.

"The information obtained from cell tests such as these may be crucial in preparation for Space Station Freedom where astronauts will have long-duration stays in space," said Lewis.

Because these space flight-related conditions are similar to various disorders on Earth, the cell experiments flying on CMIX-1 also may hold the key to better treatements for the Earth-based conditions.

"The results also may give clues about cell structure and function which potentially could improve treatment of osteoporosis, anemia and immune deficiencies on Earth," Lewis said.

The UAH CMDS will conduct the majority of its experiments in two Materials Dispersion Apparatus (MDA) minilabs. The MDA, developed by Instrumentation Technology Associates (ITA), Inc., Exton, Pa., is a brick-sized, automated device capable of mixing up to 100 separate samples of multiple fluids and/or solids at precisely-timed intervals.

In addition to the two MDAs used by the UAH CMDS, two others will be used by ITA and its commercial customers. Their experiments will include protein crystal growth, inorganic assembly, biomaterials processing, dye and yeast cell diffusion and engineering tests of the MDA.

Potential commercial applications of the ITA experiments are expected in environmental sciences, drug research and development, electronics and cell pharmacology.

ITA also is donating 5 percent of its MDA capacity to high school students in Florida, New Jersey, Pennsylvania, Virginia and Washington, D.C. The students hope to learn how the clotting process occurs in microgravity and how microgravity affects the early development of brine shrimp.

The UAH CMDS also is conducting live cell investigations in 10 Bioprocessing Modules. These experiments are designed to gain information on how cells of the human immune system may be induced to grow when exposed to certain compounds. Once scientists discover how cells respond to these compounds in microgravity, techniques may be developed to select for certain desirable cell types.

- end -

NASA News

National Aeronautics and
Space Administration

Washington, D.C. 20546
AC 202 453-8400

ISY

Terri Sindelar
Headquarters, Washington, D.C.
(Phone: 202/453-8400)

Sarah Keegan
Headquarters, Washington, D.C.
(Phone: 703/557-4841)

For Release

October 23, 1992

RELEASE: 92-181

NASA TO HOLD TOWN MEETINGS ACROSS AMERICA

NASA Administrator Daniel S. Goldin announced details for a series of town meetings across the nation to involve Americans in developing a shared vision for the future of the U.S. civil space program.

"The space program belongs to the American people. For our space program to be successful, we must have a shared vision," Goldin said.

"The town meetings will give the public an opportunity to learn about NASA's programs and to talk about what they believe should be the aspirations of the civil space program. We want every American to feel 'a pride of ownership' in their civil space program," Goldin said.

"In the cold-war era race to space, Americans clearly understood and supported NASA's missions," Goldin said. "The world is undergoing tremendous change, America is facing economic difficulties and we are reexamining our priorities. NASA wants to work closely with the public in realigning our mission to create a national agenda for the agency."

Roles, Missions and Values

This summer, review teams within NASA have been working to streamline the agency's major ongoing programs. The ultimate goal is to reshape all of NASA's activities to produce more world-class science and technology with greater efficiency and quality. In the process, NASA hopes to free up the resources necessary to push forward with new exploration projects.

As currently drafted, NASA's vision states: "As explorers, pioneers and innovators, we will boldly expand the frontiers of air and space for the benefit of all."

- more -

Elements of the emerging vision include sustaining human presence beyond Earth; increasing knowledge of planet Earth, the solar system and beyond; advancing aeronautics and astronautics through research; enhancing U.S. competitiveness and enabling private-sector involvemment in aerospace through cooperation with industry, academia, and other government agencies, and; encouraging math and science education through discovery and example.

Town Meetings

The town meetings are to acquaint the public with the emerging NASA mission and vision, to reach businesses not involved with NASA and to gain inputs on how to accomplish the agency's programs.

As part of the process of consensus, NASA has reached out to employees, to members of Congress and the White House, to professional societies and to the aerospace industry. Now, NASA is going to listen to academia -- both scholars and students -- to non-aerospace industries and to the American people.

The town meetings will include presentations by top NASA officials, as well as university researchers, members of the business community, educators and individuals from aerospace associations. Members of the audience will have an opportunity to present their views and to ask questions. Written submissions also will be accepted. NASA will have informational exhibits and hardware mock-ups at each site.

Town meetings are scheduled from 2 - 6:30 p.m. local time in the following cities:

Nov. 9	Raleigh, N.C.	North Carolina State University Jane S. McKimmon Center
Nov. 17	Hartford, Conn.	University of Hartford Lincoln Theater
Nov. 20	Indianapolis, Ind.	Indiana University-Purdue University University Place Conference Center
Dec. 3	Pasadena, Calif.	California Institute of Technology Ramo Auditorium
Dec. 11	Tampa, Fla.	University of South Florida Theatre 1
Dec. 15	Seattle, Wash.	University of Washington Student Union Building Auditorium
Jan 1993	Denver, Colo.	TBD

Town meetings will be carried live on NASA Select TV, Satcom F2R, 72 degrees West longitude, transponder 13.

For more information, the public should phone 202/453-3006.

- end -

NASA News

National Aeronautics and
Space Administration

Washington, D.C. 20546
AC 202 453-8400

ISY

For Release

Michael Braukus
Headquarters, Washington, D.C.
(Phone: 202/358-1547)

October 23, 1992

RELEASE: 92-182

NASA SIGNS ACCORD WITH DEAFNESS INSTITUTE

NASA today signed an agreement with the National Institute On Deafness And Other Communication Disorders (NIDCD) to expand biomedical cooperation between the two agencies.

"At some point in their lives, over 75 million Americans suffer from various types of balance disorders that are poorly understood by the scientific community," said Dr. Lennard Fisk, NASA's Chief Scientist and Associate Administrator of the Office of Space Science and Applications.

"The signing of this agreement is just the beginning of NASA's cooperative activities with the various institutes within the National Institutes of Health. NASA plans to work hard as a member of the national research team. I have no doubts that our efforts will enhance the nation's medical research," Fisk said.

The major goal of this collaboration is to enhance basic knowledge and understanding of vestibular function in both normal and clinical states. An increased ability to study this system could significantly enhance advances in health care and is important to NASA to protect the health and well-being of space flight crew members.

In space, astronauts experience many physiological changes to their bodies such as muscles wasting away and bones becoming smaller and weaker. The absence of gravity also causes astronauts to suffer space motion sickness. NASA expects this agreement to help it obtain a better understanding of how space flight affects the human body.

Today's agreement calls for activities on Earth and in space. NASA's Life Sciences Division will fund jointly with NIDCD a center to study balance and control of balance. NASA also will develop ways to make its unique facilities, such as the Vestibular Research Facility at the Ames Research Center, Mountain View, Calif., available to NIDCD researchers. In space, NIDCD will work closely with NASA in developing joint activities for Neurolab, a Spacelab mission planned to be launched in 1998.

- end -

NASA News

National Aeronautics and
Space Administration

Washington, D.C. 20546
AC 202 453-8400

ISY

For Release

Randee Exler
Goddard Space Flight Center, Greenbelt, Md.
(Phone: 301/286-7277)

October 26, 1992

RELEASE: 92-183

NASA SELECTS FIRMS FOR WORKSTATION PROCUREMENT

NASA's Goddard Space Flight Center, Greenbelt, Md., has selected eight firms for negotiations leading to the award of nine separate Indefinite Delivery/Indefinite Quantity (ID/IQ), firm-fixed price contracts for seven classes of workstations and two categories of supporting equipment that comprise the Scientific and Engineering Workstation Procurement (SEWP).

SEWP is an open systems procurement based on government and industry standards. The nine ID/IQ contracts will have a potential value of approximately $800 million over a 1-year basic contract period plus four 1-year options, according to Goddard officials.

The firms and the classes and categories for which they have been selected are:

o Class 1 - Federal Computer Aided Engineering/Computer Aided Design (CAE/CAD) Workstations: SUN Microsystems, Mountain View, Calif.

o Class 2 - CAE/CAD Mechanical Design Workstations: Hewlett-Packard, Rockville, Md.

o Class 3 - Mission Operations Workstations: Harris Computer Systems, Ft. Lauderdale, Fla.

o Class 4 - Network Data Server Workstations: IBM, Bethesda, Md.

o Class 5 - High Performance 3-D Graphics Workstations: Silicon Graphics Inc., Bethesda, Md.

-more-

o Class 6 - Multi-Purpose Compute Server Workstations: Silicon Graphics Inc.

o Class 7 - General Purpose Workstations: Digital Equipment Corp., Lanham, Md.

o X-Terminals/Printers Category: GTSI, Chantilly, Va.

o Network Equipment Category: Paramax Systems Corp., Reston, Va.

This effort provides for all NASA and NASA-funded sites, the procurement of leading-edge, state-of-the-art computer workstations at the lowest cost for both the scientific and engineering arenas. The contracts also will provide for the delivery, installation and maintenance of the equipment as well as the ability to expand the capabilities of the workstations by allowing the end-user to order from a sizable list of growth options. In addition, 10 percent of the total value of the requirement will be reserved for use by other government agencies.

A further feature of this procurement is the development and maintenance of a unique test-site/trouble-shooting support group known as the "SEWP Bowl." The SEWP Bowl will be staffed by the government to manage the nine resultant contracts and to provide administrative and technical support for the end-users.

Thirty day operational capability demonstrations for each class and category are expected to begin shortly. The nine contracts are expected to be awarded in December 1992.

-end-

NASA News

National Aeronautics and
Space Administration

Washington, D.C. 20546
AC 202 453-8400

ISY

Terri Sindelar
Headquarters, Washington, D.C.
(Phone: 202/453-8400)

Jeff Carr
Johnson Space Center, Houston
(Phone: 713/483-5111)

For Release
October 26, 1992

RELEASE: 92-184

AN HISTORIC COMMUNICATIONS LINK SET FROM SPACE TO SEA

The Earth-orbiting crew of Space Shuttle Columbia will talk with the sea-voyaging crew of the historic Hawaiian canoe Hokule'a on Wednesday, Oct. 28 at 2:09 p.m. EST.

At the same time, students throughout Hawaii, plotting the course of the canoe's voyage, will watch the televised conversation. Selected students, located at the University of Hawaii's TV Lab, will ask both crews about flight and sail plans, weather, procedures for navigating both vessels and about exploration.

"There are compelling similarities between space and ocean exploration," said Myron Thompson, President of the Polynesian Voyaging Society and the father of Hokule'a's sailmaster and navigator. "The discovery and settlement of Hawaii marked the end of the first phase of human's migration using stone age technology. The voyages of the Shuttle mark the other end of this spectrum of discovery and exploration."

The Hokule'a set sail last Friday from the Cook Islands on a journey to the Hawaiian Islands. The double-hulled, 65-foot canoe is a replica of the vessels used by the Polynesians who, as early as 3 thousand years ago, explored the 20 million square miles of ocean. They discovered and settled Samoa, Tonga, the Marquesas, the Cooks, the Societies, the Tuamotus, Easter Island, New Zealand and finally Hawaii.

Carbon dating indicates that Polynesians sailed 2,500 miles from the Marquesas to first colonize Hawaii around 250 A.D. The Hokule'a will retrace the route of her ancestors to better understand the ancient seafarers accomplishments and to unlock a similar passion for discovery with students.

- more -

Students Chart Course of Canoe and Learn Math and Sciences

"Hokule'a symbolizes the promise of the future and the great adventure of exploring a new ocean of space," Thompson said. "The excitement created by this unique contact has stimulated educational programs throughout the state.

"Both voyages of exploration require the courage, commitment and cooperation of entire societies to ensure success. We hope to demonstrate to school children that exploration is a continuum with endless possibilities," Thompson said. The theme of the Hokule'a voyage is "No Na Mamo" -- meaning "For the Generations."

During Hokule'a 30-day return voyage from Rarotonga in the Cook Islands to Hawaii, school children in Hawaii will plot the daily course of the canoe and learn about the differences between the ancient Polynesian method of navigating with today's satellite technology.

Today, only 10 Polynesians practice the ancient art of Polynesian navigation called Wayfinding. These navigators memorize star paths and other natural signs, combining them with their knowledge of currents and weather and sailing strategies.

The Hawaii Maritime Center, a cooperative partner with the Polynesian Voyaging Society, has conducted workshops to teach sailing strategies and plotting procedures and to demonstrate satellite position technology. To assist students tracking the canoe, the center has set up a phone line to access data from the Global Positioning Satellite on the canoe's location.

The Department of Education's Distance Learning and Technology Office will broadcast live hookups with the canoe and provide daily position reports. KCCN radio will broadcast daily reports of the canoe's position, weather and life-at-sea information. The "Honolulu Advertiser" will print daily reports.

The Polynesian Voyaging Society has prepared a teacher's guide and instructional tapes. In addition to math skills learned through plotting navigation, students also will learn geography, astronomy, ecology, oceanography, natural history and Polynesian cultural practices.

- end -

NATIONAL AERONAUTICS AND SPACE ADMINISTRATION

92-185

SPACE SHUTTLE MISSION

STS-53

PRESS KIT

DECEMBER 1992

NINTH DEDICATED DEPARTMENT OF DEFENSE MISSION

PUBLIC AFFAIRS CONTACTS

NASA Headquarters

Office of Space Flight/Office of Space Systems Development
Mark Hess/Jim Cast/Ed Campion
(Phone: 202/453-8536)

Office of Space Science and Applications
Paula Cleggett-Haleim/Mike Braukus/Brian Dunbar
(Phone: 202/358-1547)

Office of Aeronautics and Space Technology
Drucella Andersen/Les Dorr
(Phone: 202/453-2754)

Office of Safety & Mission Quality/Office of Space Communications
Dwayne Brown
(Phone: 202/358-0547)

****

Department of Defense

Secretary of the Air Force Public Affairs
Maj. Dave Thurston
(Phone: 703/695-5766)

USAF Space and Missile Systems Center Public Affairs

Betty Ciotti	Dave Hess
(Phone: 310/363-6836)	(Phone: 713/483-3498)

****

NASA Centers

Ames Research Center
Jane Hutchison
(Phone: 415/604-4968)

Dryden Flight Research Facility
Nancy Lovato
(Phone: 805/258-3448)

Goddard Space Flight Center
Dolores Beasley
(Phone: 301/286-2806)

Jet Propulsion Laboratory
James Wilson
(Phone: 818/354-5011)

Johnson Space Center
James Hartsfield
(Phone: 713/483-5111)

Langley Research Center
Jean Drummond Clough
(Phone: 804/864-6122)

Lewis Research Center
Mary Ann Peto
(Phone: 216/433-2899)

Marshall Space Flight Center
June Malone
(Phone: 205/544-0034)

Stennis Space Center
Myron Webb
(Phone: 601/688-3341)

Wallops Flight Facility
Keith Koehler
(Phone: 804/824-1579)

Kennedy Space Center
George Diller
(Phone: 407/867-2468)

CONTENTS

GENERAL BACKGROUND

General Release 1
Media Services Information 3
Quick-Look-Facts 4
Summary of Major Activities 5
Vehicle and Payload Weights 6
Trajectory Sequence of Events 7
Space Shuttle Abort Modes 8
Prelaunch Processing 9

CARGO BAY PAYLOADS

DoD-1 10
Glow Experiment/Cryogenic Heat Pipe Experiment (GCP) 10
Orbital Debris Radar Calibration Spheres (ODERACS) 13

MIDDECK PAYLOADS

Battlefield Laser Acquisition Sensor Test (BLAST) 15
Cloud Logic to Optimize Use of Defense Systems (CLOUDS) 15
Cosmic Radiation Effects and Activation Monitor (CREAM) 17
Fluid Acquisition and Resupply Experiment (FARE) 17
Hand-held, Earth-oriented, Real-time, Cooperative, User-friendly, Location-targeting and Environmental System (HERCULES) 21
Microcapsules in Space-1 (MIS-1) 23
Radiation Monitoring Experiment-III (RME-III) 25
Space Tissue Loss (STL) 25
Visual Function Tester-2 (VFT-2) 27

CREW BIOGRAPHIES & MISSION MANAGEMENT

STS-53 Crew Biographies 28
Mission Management for STS-53 30

SHUTTLE MISSIONS

Previous Shuttle Missions 34
Upcoming Shuttle Missions 35

RELEASE: 92-185 December 1992

DISCOVERY TO FLY CLASSIFIED DEFENSE PAYLOAD

The newly-refurbished and modified Space Shuttle Discovery is scheduled to make its 15th orbital flight this month on a dedicated Department of Defense (DoD) mission. The STS-53 primary payload, designated DoD-1, is classified and represents the last major military payload currently planned for the Shuttle fleet.

"Nine DoD primary payloads have been carried into space by the Shuttle since 1985," said NASA Administrator Daniel S. Goldin. "The fact that complex mutual objectives have been achieved by two federal organizations, chartered with often-divergent goals, is a wonderful and remarkable demonstration of interagency cooperation at its best."

"STS-53 marks a milestone in our long and productive partnership with NASA. We have enjoyed outstanding support from the Shuttle program. Although this is the last dedicated Shuttle payload, we look forward to continued involvement with the program with DoD secondary payloads," added Martin C. Faga, Assistant Secretary of the Air Force (Space).

STS-53 Payloads

Although no public discussion of the identity and purpose of DoD-1 will take place due to national security concerns, a number of secondary experiments in the cargo bay and in Discovery's cabin will be openly conducted throughout the planned 7-day, 5-hour, 54-minute mission.

Among many secondary experiments will be medical studies of the effects of microgravity on cells from bone tissue, muscles and blood and the release of 2-, 4- and 6-inch metal spheres into space to test ground-based capabilities of detecting potentially dangerous debris in low-Earth orbit.

Military examination of a human's ability to observe ground-based phenomena from space will be carried out during the mission as will continuous measurements of the amount and types of radiation levels that accumulate in the crew cabin. Many of the STS-53 medical observations will apply directly to planning for human occupation of Space Station Freedom by the end of this decade.

Experienced Flight Crew

Four of Discovery's five crew members have flown in space before. Mission Commander David Walker will be making his third flight; Pilot Robert Cabana his second; Mission Specialists Guion Bluford and Jim Voss their fourth and second, respectively. Mission Specialist Michael Richard Clifford will be making his first flight. The Navy, Air Force, Marine Corps and Army (2) are represented by the all-military crew.

- more -

Discovery Face Lift

STS-53 will be Discovery's first mission since January 1992, when it successfully completed the International Microgravity Laboratory-1 flight, STS-42.

In the intervening months, the vehicle, like other members of the fleet, has undergone extensive structural inspections, modifications and equipment upgrades to insure its flight worthiness and ability to technologically perform on a level equal to that of its spaceborne peers.

- End of General Release -

MEDIA SERVICES INFORMATION

SPECIAL NOTICE: Department of Defense-1 (DoD-1), the primary payload on mission STS-53, is classified. As a result, NASA's normal Space Shuttle public affairs activities will be altered, slightly, to accommodate the national security interests of the DoD. In particular, the primary payload and activities associated with it will not be identified or discussed before, during or after the flight in any public forum or medium, including briefings, printed materials or interviews. NASA Select television and mission commentary also will be affected -- but, again, only slightly. Specific information concerning changes in STS-53 public affairs activities and practices will be released in a separate document no later than one week before launch.

NASA Select Television Transmission

NASA Select television is available on Satcom F-2R, Transponder 13, located at 72 degrees west longitude, frequency 3960.0 MHz, audio 6.8 MHz.

The schedule for television transmissions from the orbiter and for mission briefings will be available during the mission at Kennedy Space Center, Fla; Marshall Space Flight Center, Huntsville, Ala.; Ames-Dryden Flight Research Facility, Edwards, Calif.; Johnson Space Center, Houston and NASA Headquarters, Washington, D.C. The television schedule will be updated to reflect changes dictated by mission operations.

Television schedules also may be obtained by calling COMSTOR 713/483-5817. COMSTOR is a computer database service requiring the use of a telephone modem. A voice recording of the television schedule is updated daily at noon Eastern Time.

Status Reports

Status reports on countdown and mission progress, on-orbit activities and landing operations will be produced by the appropriate NASA newscenter.

Briefings

A mission press briefing schedule will be issued prior to launch. During the mission, change-of-shift briefings by a flight director will occur at least once per day. The updated NASA Select television schedule will indicate when mission briefings are planned.

STS-53 QUICK LOOK

Launch Date and Site:	Dec. 2, 1992 Kennedy Space Center, Fla. -- Pad 39A
Launch Window:	6:59 a.m. EST
Orbiter:	Discovery's 15th Flight
Orbit/Inclination:	200 x 200 nm / 57 degrees (DOD-1) 175 x 176 nm / 57 degrees (ODERACS deploy)
Landing Time/Date:	12:53 p.m. EST, Dec. 9
Primary Landing Site:	Kennedy Space Center, Fla.
Abort Landing Sites:	Return To Launch Site Abort: Kennedy Space Center Trans-Atlantic Abort Landing: Zaragoza, Spain -- Prime Ben Guerir, Morocco -- Alternate Moron, Spain -- Alternate
Abort-Once-Around:	Edwards AFB, Calif. -- Prime KSC/White Sands, N.M. -- Alternates
Crew:	David Walker - Commander Robert Cabana - Pilot Guion Bluford - MS1 Michael Clifford - MS2 James Voss - MS3
Cargo Bay Payloads:	Department of Defense-1 (DOD-1) Glow Experiment/Cryogenic Heat Pipe (GCP) Orbital Debris Radar Calibration Spheres (ODERACS)
Middeck Payloads:	Battlefield Laser Acquisition Sensor Test (BLAST) Clouds Logic to Optimize Use of Defense Systems (CLOUDS-1A) Cosmic Radiation Effects and Activation Monitor (CREAM) Fluid Acquisition and Resupply Experiment (FARE) Hand-held, Earth-oriented, Real-time Cooperative, User-friendly, Location-targeting and Environmental System (HERCULES) Microcapsules in Space (MIS) Radiation Monitoring Equipment-III (RME-III) Space Tissue Loss (STL) Visual Function Tester-2 (VFT-2) Ultraviolet Plume Instrument

STS-53 SUMMARY TIMELINE

Flight Day One
- Launch/Post Insertion
- Primary payload activities

Flight Day Two
- GCP operations
- HERCULES operations
- VFT-2 operations
- FARE operations
- OMS-3
- OMS-4

Flight Day Three
- ODERACS deploy
- GCP operations
- HERCULES operations
- BLAST operations
- FARE operations

Flight Day Four
- HERCULES operations
- BLAST operations
- FARE operations

Flight Day Five
- HERCULES operations
- GCP operations
- BLAST operations
- FARE operations

Flight Day Six
- GCP Operations
- HERCULES operations
- BLAST operations

Flight Day Seven
- GCP Operations
- Flight Control Systems checkout
- Cabin Stow

Flight Day Eight
- Deorbit Preparation
- Deorbit Burn
- Entry, Landing

STS-53 VEHICLE AND PAYLOAD WEIGHTS

Vehicle/Payload	Pounds
Orbiter (Discovery) Empty and three SSMEs	173,596
Department of Defense-1 and Support Equipment (DOD-1)	23,215
Glow/Cryogenic Heat Pipe Experiment (GCP)	1,542
Orbital Debris Radar Calibration Spheres (ODERACS)	747
Battlefield Laser Acquisition Sensor (BLAST)	125
HERCULES	135
Fluid Acquisition and Resupply Experiment (FARE)	243
Microcapsules in Space Experiment MIS)	140
Total Vehicle at Solid Rocket Booster Ignition	4,506,246
Orbiter Landing Weight	193,045

STS-53 TRAJECTORY SEQUENCE OF EVENTS

EVENT	Elapsed Time (d/h:m:s)	Velocity (fps)	Mach	Altitude (feet)
Launch	00/00:00:00			
Begin Roll Maneuver	00/00:00:10	188	.17	799
End Roll Maneuver	00/00:00:19	428	.38	3,653
SSME Throttle Down (67 Percent)	00/00:00:31	741	.67	9,914
Max. Dynamic Pressure (Max Q)	00/00:00:53	1,210	1.16	28,605
SSME Throttle Up (104 Percent)	00/00:01:04	1,514	1.54	41,289
SRB Separation	00/00:02:04	4,151	3.79	154,703
Main Engine Cutoff (MECO)	00/00:08:36	25,032	22.0	373,332
Zero Thrust	00/00:08:42	25,057	21.55	377,730
Fuel Tank Separation	00/00:08:54			
OMS-2 Burn	00/00:36:57			
Deorbit Burn	07/04:51:00			
Landing at KSC	07/05:54:00			

Apogee, Perigee at MECO: 198 x 11 nautical miles
Apogee, Perigee after OMS-2: 201 x 200 nautical miles

SPACE SHUTTLE ABORT MODES

Space Shuttle launch abort philosophy aims toward safe and intact recovery of the flight crew, orbiter and its payload. Abort modes include:

* **Abort-To-Orbit (ATO)** -- Partial loss of main engine thrust late enough to permit reaching a minimal 105-nautical mile orbit with orbital maneuvering system engines.

* **Abort-Once-Around (AOA)** -- Earlier main engine shutdown with the capability to allow one orbit around before landing at either Edwards Air Force Base, Calif., White Sands Space Harbor, N.M., or the Shuttle Landing Facility (SLF) at the Kennedy Space Center, Fla.

* **Trans-Atlantic Abort Landing (TAL)** -- Loss of one or more main engines midway through powered flight would force a landing at either Zaragoza, Spain; Ben Guerir, Morocco; or Moron, Spain.

* **Return-To-Launch-Site (RTLS)** -- Early shutdown of one or more engines, and without enough energy to reach Zaragoza, would result in a pitch around and thrust back toward KSC until within gliding distance of the Shuttle Landing Facility.

STS-53 contingency landing sites are Edwards Air Force Base, the Kennedy Space Center, White Sands Space Harbor, Zaragoza, Ben Guerir and Moron.

STS-53 PRELAUNCH PROCESSING

The orbiter Discovery spent much of the past year in the Orbiter Processing Facility (OPF) undergoing extensive improvements and modifications.

Following its most recent mission, STS-42 in January 1992, Discovery was ferried from its landing site at Edwards Air Force Base to Kennedy Space Center on Feb. 16 and rolled into OPF bay 2.

After the International Microgravity Laboratory was removed from the orbiter's payload bay on Feb. 23, work began to remove other significant pieces of flight hardware such as the Forward Reaction Control System, both Orbital Maneuvering System (OMS) pods, the three main engines, and the body flap.

During its 6-month modification period, 78 modifications were conducted on the vehicle. The most significant included the addition of a drag chute, the capability for redundant nose wheel steering, improved auxiliary power units and making improvements to the vehicle's avionics packages. Also, wing strut inspections were conducted and the freon service loop was reserviced.

In late July, the three main engines were installed on Discovery. Engine 2024 is in the number 1 position, engine 2012 is in the number 2 position and engine 2017 is in the number 3 position.

A standard 43-hour launch countdown is scheduled to begin 3 days prior to liftoff. About 9 hours before launch, the external tank will be filled with a half million gallons of liquid oxygen and liquid hydrogen propellants. Approximately 3 hours before launch, the crew will depart their quarters at KSC, be driven to the pad and take their assigned seats in the crew compartment.

Discovery's end-of-mission landing is planned at Kennedy Space Center's Shuttle Landing Facility.

Discovery's next mission, STS-56, is an 8-day flight featuring the ATLAS-2 payload. Launch is scheduled for early next year.

PRIMARY PAYLOAD

Department of Defense-1 (DoD-1) is the primary cargo bay payload for mission STS-53. The identity and purpose of DoD-1 are classified.

SECONDARY CARGO BAY PAYLOADS

Shuttle Glow/Cryogenic Heat Pipe Experiment (GCP)

Shuttle Glow (GLO)

The Shuttle Glow (GLO) experiment is sponsored by the Geophysics Directorate of the Air Force's Phillips Laboratory, Albuquerque, N.M. GLO is being integrated and flown on STS-53 under the direction of the Department of Defense's Space Test Program. GLO will use the Arizona Imaging Spectrograph (AIS) to investigate Shuttle/environment interactions such as atomic oxygen surface glow on the orbiter's tail and other surfaces and wake phenomena. The AIS will observe the orbiter's orbital maneuvering system pods, OMS and reaction control system jet firings, waste water dumps and flash evaporative cooler system operations.

The AIS has cameras and spectrographs to record in the ultraviolet, visible and infrared bands. The AIS is almost identical to the Infrared Background Signature Survey instrument which flew on STS-39. The AIS is mounted in the cargo bay to a hitchhiker small plate.

In operation, the crew powers on the experiment. Johnson Space Center enables payload commanding from the "remote" payload operations control center (POCC) at Goddard Space Flight Center (GSFC), Greenbelt, Md. GSFC sends the "hitchhiker" configuration commands and enables the experimenters to send commands to configure the AIS (exposure time, number of detectors to use). The crew performs any required action (jet firing, water dump, etc.), and the observations are made. The data is downlinked to the POCC so viewing by the experimenters is near real-time.

Cryogenic Heat Pipe Experiment (CRYOHP)

The Cryogenic Heat Pipe (CRYOHP) experiment is a joint Department of Defense/NASA experiment to test advanced technology that will make it easier to reject excess heat from infrared sensors, instruments and space vehicles.

Electronics, mechanical systems and people all generate heat aboard a spacecraft. Unless the heat is rejected into space, sensors, instruments and systems will overheat and fail or return bad data.

CRYOGENIC HEAT PIPE EXPERIMENT

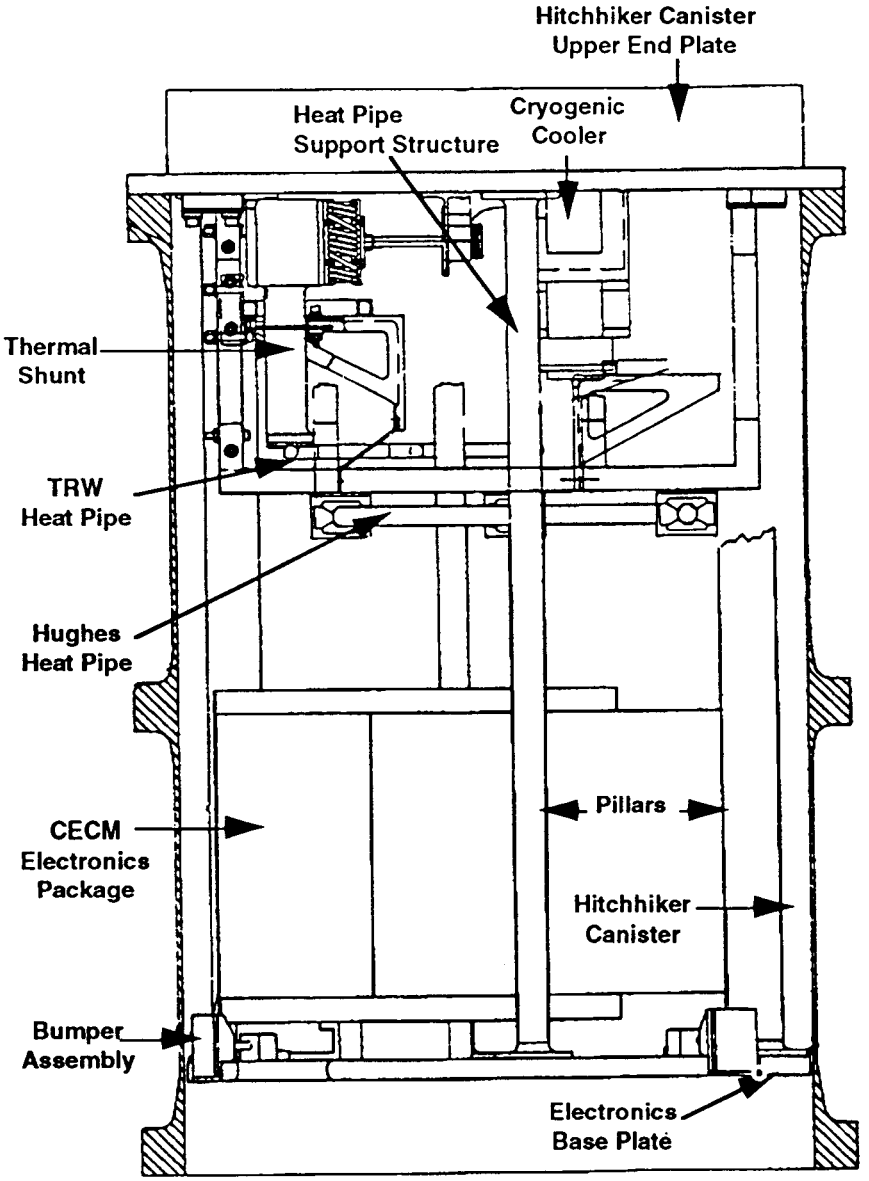

A heat pipe is a simple, highly dependable way to reject heat. It is a closed vessel containing a fluid, with no moving mechanical parts. Instead, it uses the natural phenomena of liquids absorbing heat to evaporate and release that heat when they condense.

In a typical system, waste heat from the sensor or instrument evaporates the liquid at one end of the heat pipe and the vapor condenses and releases heat to space at the other end. Capillary action moves the fluid back to the evaporator end.

The prime goal of the Cryogenic Heat Pipe experiment is to prove that cryogenic (very low temperature) heat pipes can reliably start up and operate at -351 to minus 198 degrees F (minus 213 to minus 128 degrees C). Supercold liquid oxygen serves as the working fluid in CRYOHP instead of the water, ammonia or Freon used by most heat pipe concepts.

CRYOHP flies in a Hitchhiker canister mounted on the right side wall of Discovery's payload bay. The canister houses two heat pipe designs, one made by TRW, Torrance, Calif., and the other by Hughes Aircraft Co. Electron Dynamics Division, Huntington Beach, Calif. It also contains five Stirling cryogenic coolers to maintain cold temperatures, power and electronic control boxes and an upper end plate that lets heat escape to space.

Discovery's crew will turn CRYOHP on about 8.5 hours after liftoff. Eight sets of tests will be run alternating between the two heat pipes, starting with the TRW design. The runs will last from 7.5 and 27 hours for each concept. The Payload Operations Control Center at NASA's Goddard Space Flight Center will send all commands to CRYOHP and receive all telemetry during the STS-53 mission.

Co-investigators for the Cryogenic Heat Pipe experiment are Roy McIntosh of Goddard Space Flight Center and Jerry Beam of the U.S. Air Force Wright Aeronautical Laboratories, Dayton, Ohio.

NASA's Hitchhiker project was created in early 1984 to provide a quick reaction and low cost capability for flying small payloads in the Shuttle payload bay. This is done with a short turn-around time -- from manifest to flight takes an average of 18 months. Hitchhikers are intended for customers whose space activity requires power, data or command services.

Hitchhiker payloads are entitled to special "handling" in the orbiter that other small payloads, like the Get Away Specials, do not receive. This special handling includes tapping into the Shuttle for power and astronaut services such as requiring specific Shuttle attitudes or maneuvers. The orbiter crew moves the Shuttle when necessary to the position needed for the Hitchhiker experiment, provided it does not interfere with the needs of the primary payloads.

Hitchhikers are manifested to fly with primary payloads that either have similar requirements or that will not be affected by the changes in Shuttle position necessary to the Hitchhiker experiments.

Orbital Debris Radar Calibration System (ODERACS)

The Orbital Debris Radar Calibration System (ODERACS) experiment will release six calibration spheres from Discovery. The spheres -- two 6-inches in diameter, two 4-inches in diameter and two 2-inches in diameter -- will be placed in a 175 nautical-mile-high (377 kilometer) orbit when they are ejected from the Shuttle's cargo bay.

The primary objective of the ODERACS experiment is to provide a source for fine-tuning of the Haystack Radar, located in Tyngsboro, Mass., and operated by the Lincoln Laboratory at the Massachusetts Institute of Technology for the Air Force. NASA uses information from the radar as part of the inputs gathered to measure the amount of debris in Earth orbit. The Haystack radar can observe objects as small as 1 centimeter in diameter at ranges greater than 620 nautical miles (1,000 kilometers).

The six spheres are planned to be ejected from Discovery on its 31st orbit and will be tracked by a number of radar facilities, including the Haystack Radar as well as several telescopes. Facilities around the world that will track the spheres include Millstone Radar, Kwajalein Radar, the Eglin Radar in Florida and the FGAN radar in Germany. Optical facilities that will track the spheres include the worldwide GEODDS telescope network, the NASA/Johnson Space Center telescope in Houston and the Super-RADOT telescope facility in the South Pacific.

The spheres will help these facilities and others to better characterize their instruments by allowing them to home in on objects whose size, composition, reflectivity and electromagnetic scattering properties are well known.

The four-inch spheres' useful life is about 70 days and they will reenter the atmosphere after approximately 120 days. The 2-inch and 6-inch spheres have a useful life of about 45 days and will reenter after approximately 65 days. When they reenter the atmosphere, the spheres will be destroyed before they reach the ground.

STS-53 Mission Specialist Michael Clifford will control the operation of the ODERACS Ejection System using a hand-held encoder to send commands to the Shuttle's Autonomous Payload Control System. Clifford will verify the ejection of all six spheres. Video and radar coverage will determine the actual ejection time and velocity. The velocity data will be used to update the computers that will calculate the spheres' locations to assist the telescope and radar systems in initially locating them.

ODERACS Hardware

The ODERACS Ejection System is contained in a standard 5-cubic-foot cylindrical canister, called a Get-Away Special container. The ejection system

ODERACS

ODERACS EJECTION SYSTEM

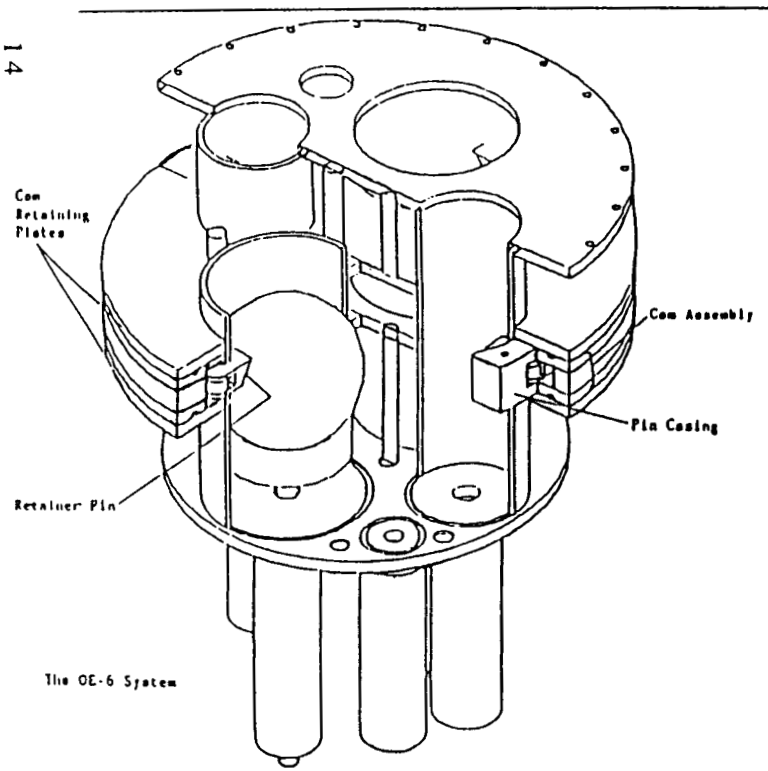

OPTICAL SITES, FIELDS OF VIEW

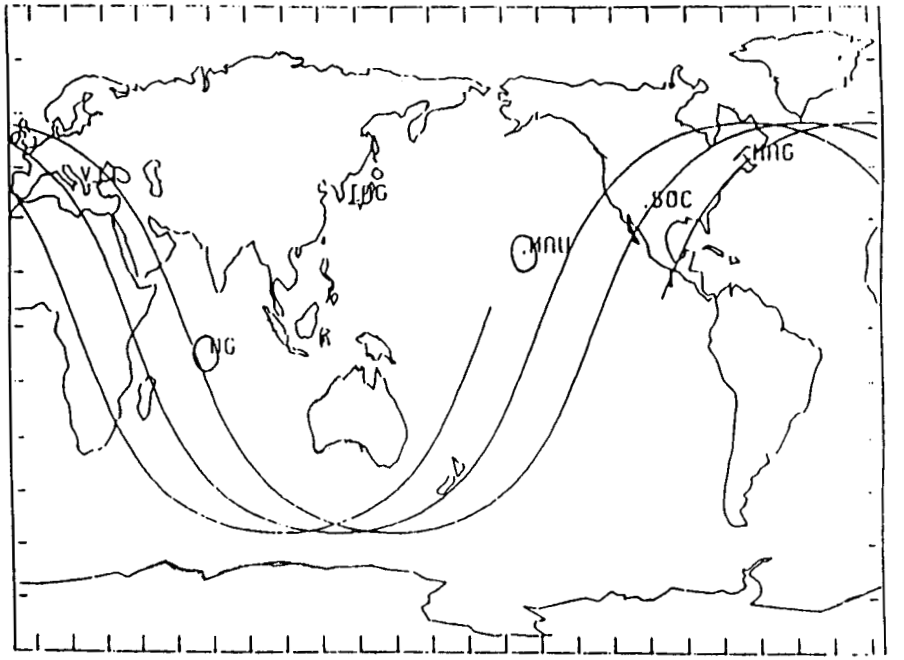

RADAR SITES, FIELDS OF VIEW

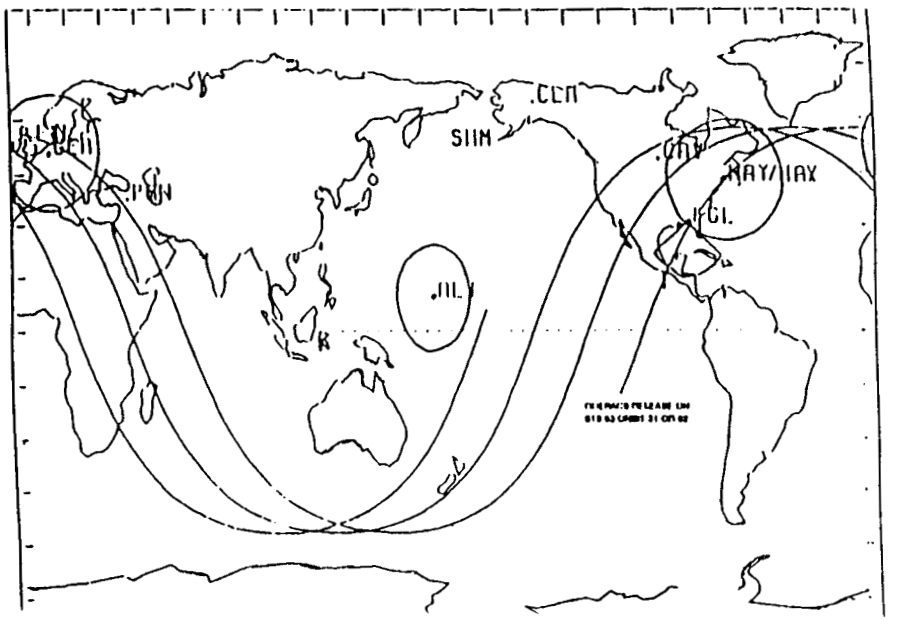

has four subsystem elements consisting of release pins, ejection springs, electrical batteries and motor and structural support.

The calibration spheres themselves are made to precise specifications. The 2-inch spheres are made of solid stainless steel and weigh 1.17 lbs (0.532 kg); the 4-inch spheres, also solid stainless steel, weigh 9.36 lbs (4.256 kg); and the 6-inch spheres, made of solid aluminum, weigh 11 lbs (5 kg).

SECONDARY IN-CABIN PAYLOADS, EXPERIMENTS

Battlefield Laser Acquisition Sensor Test (BLAST)

The Battlefield Laser Acquisition Sensor Test (BLAST) is an Army space project jointly sponsored by the Army Space Command, Colorado Springs, the Army Space Technology Research Office, Adelphi, Md., and the Night Vision Electro Optics Directorate, Ft. Belvoir, Va.

The experiment is designed to demonstrate the technology associated with using a spaceborne laser receiver to detect laser energy from ground-based test locations. BLAST is being integrated and flown on the Space Shuttle under the direction of the Department of Defense's Space Test Program.

BLAST is making its first flight. It will demonstrate the Army's ability to uplink Global Positioning System data through a laser medium. The test primarily will involve the use of two fixed optical tracking facilities located at the Air Force Maui Optical Site in Hawaii and the Air Force Malabar Test Facility in Palm Bay, Fla. Additionally, portable tracking sites will be set up at various DoD field locations.

A low power visible laser mounted on a gimbaled tracking system will track the Shuttle, based on the most recent NASA orbiter location information. The optical signal from the tracking facilities is captured by an on-board laser receiver mounted in the Shuttle flight deck overhead window. The optical signal is processed and displayed to the flight crew real-time and recorded for post mission analysis. Data obtained will be used to develop DoD sensor technology.

Cloud Logic to Optimize Use of Defense Systems (CLOUDS)

The objective of CLOUDS, a Military-Man-In-Space experiment, is to quantify the variation in apparent cloud cover as a function of the angle at which clouds are viewed from orbit.

The equipment used is a standard Nikon 35mm camera. A crew member simply points the camera at scenes of interest and continually photographs the scene as the orbiter passes over and away from the scene. The scenes of interest are identified by meteorologists on the ground and relayed to the Shuttle crew. Each mission has a specific meteorological or cloud feature of interest which will be emphasized. This mission will emphasize severe weather, to include thunderstorms and tropical storms.

CREAM

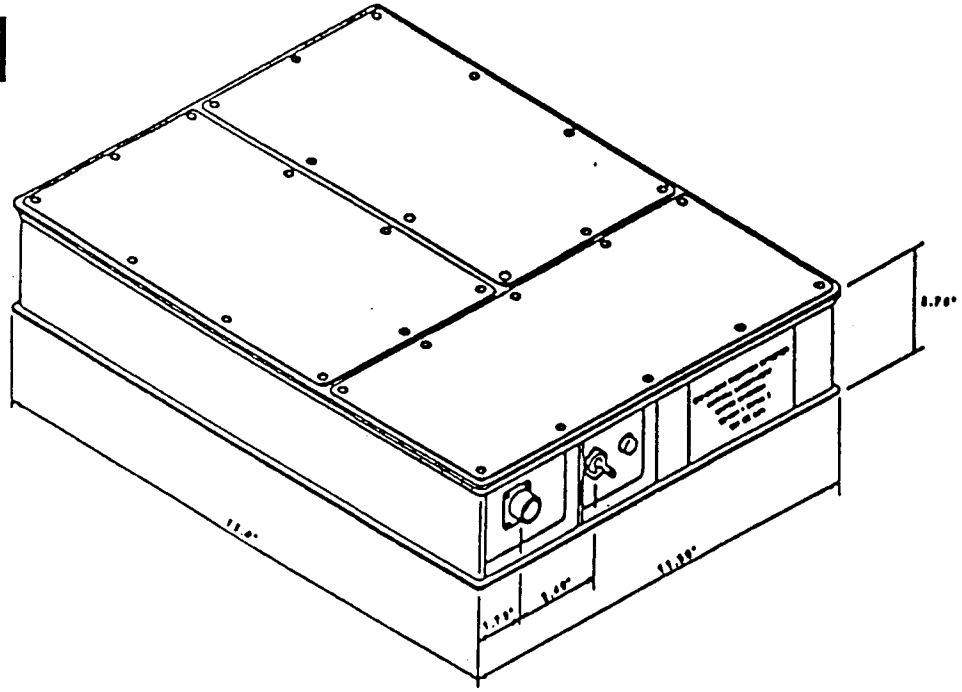

Cosmic Radiation Effects and Activation Monitor (CREAM) - Active Monitor

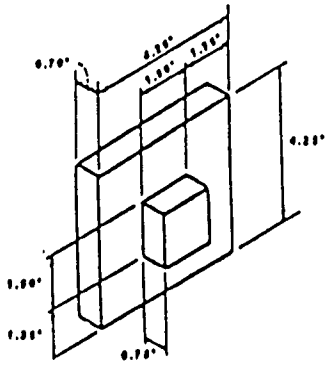

Passive Dosimetry Package

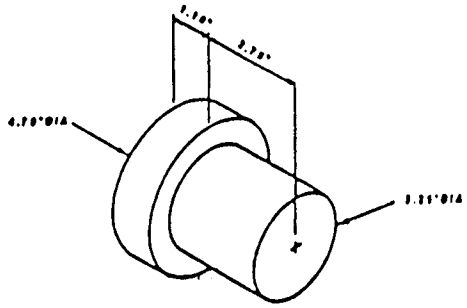

Sodium Iodide Crystal Passive Detector

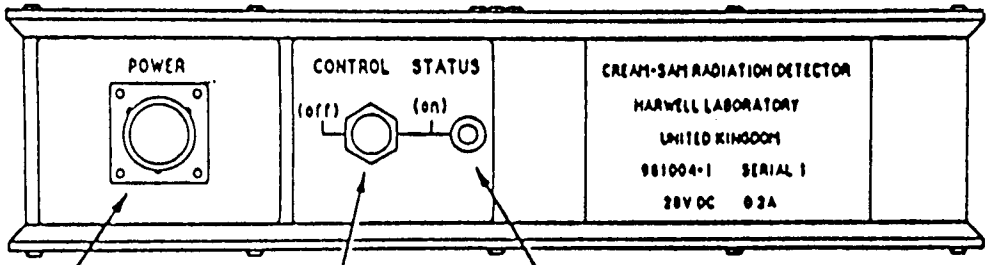

28V DC Power Recepticle

On/Off Switch

Green Status Light

Detail of CREAM Active Monitor Front Panel

Data from the CLOUDS experiment will be stored in a high resolution data base for use by the meteorological community and various Defense Meteorological Satellite Program (DMSP) initiatives. The DMSP system program office will use the data in the development and evaluation of future electro-optical sensors through the generation of standard scenes for model evaluation and the study of high incidence angle effects.

CLOUDS has flown on various Shuttle missions since 1984 and is being integrated and flown on the Space Shuttle under the direction of the Department of Defense's Space Test Program.

Cosmic Radiation Effects and Activation Monitor (CREAM)

The CREAM experiment is designed to collect data on cosmic ray energy loss spectra, neutron fluxes and induced radioactivity.

The data will be collected by active and passive monitors placed at specific locations throughout the Orbiter's cabin. CREAM data will be obtained from the same locations used to gather data for the Radiation Monitoring Equipment-III experiment in an attempt to correlate data between the two.

The active monitor to obtain real-time spectral data, while the passive monitors will obtain data during the entire mission to be analyzed after the flight.

The flight hardware has the active cosmic ray monitor, a passive sodium iodide detector and up to five passive detector packages. All hardware fits in one locker on Discovery's middeck.

Once in orbit, the payload will be unstowed and operated by the crew. A crew member will be available at regular intervals to monitor the experiment and to relocate the active detector. The CREAM flight is sponsored by the Department of Defense, and the experiment is provided by the United Kingdom Defense Research Agency at Farnborough, England. CREAM is being integrated and flown on the Space Shuttle under the direction of the DoD's Space Test Program.

The experiment has already flown successfully on Missions 44 and 48 and has given important results on the buildup of secondary radiation with increased shielding as well as identifying a new region of trapped radiation over the South Atlantic.

Fluid Acquisition and Resupply Equipment (FARE)

The Fluid Acquisition and Resupply Experiment (FARE) will investigate the dynamics of fluid transfer in microgravity.

In space, fluid in a container does not readily settle on the bottom or leave a pocket of gas on top as it does on Earth. The orientation of liquids in weightlessness is highly unpredictable because the fluid may locate in any area within the container and may encapsulate large bubbles of gas. To replenish on-board fluids and prolong the life of space vehicles such as Space Station Freedom, satellites and extended duration orbiters, methods for transferring vapor-free propellants and other liquids must be developed.

Housed in four middeck lockers, FARE is designed to demonstrate the effectiveness of a device to alleviate the problems associated with vapor-free liquid transfer. The device exploits the surface tension of the liquid to control its position within the tank.

The basic flight hardware consists of a 12.5 inches (30.48 cm) spherical supply tank and a 12.5 inches (30.48 cm) spherical receiver tank made of transparent acrylic. Additional items include liquid transfer lines, two pressurized air bottles, a calibrated cylinder and associated valves, lines, fittings, pressure gauges and a flowmeter display unit.

The experiment is essentially self-contained, with the exception of a water-fill port, air-fill port and an overboard vent connected to the orbiter waste management system.

Mission specialists will conduct this experiment eight times during the flight, using a sequence of manual valve operations. Air from the pressurized bottles will force fluid from the supply tank to the receiver tank and back to the supply tank eight times during the 8-hour operation. The receiver tank contains baffles to control fluid motions during the transfer and a fine mesh screen to filter vapor out of the liquid. An overboard vent will remove the vapor from the receiver tank as the fluid level rises.

The FARE control panel, containing four pressure gauges and one temperature control gauge, will be used by the crew to monitor and control the experiment. Camcorder video tapes and 35-mm photographs will be made during the transfer process. The crew also will have the option of using air-to-ground communication to consult with the principal investigator.

The test fluid used for this experiment is water with iodine used as a disinfectant; blue food coloring allowing better visibility of the liquid movement; a wetting solution, known as Triton X-100, to give the fluid the consistency of a propellant and an anti-foaming emulsion agent to prevent bubbles from forming in the receiver tank.

Post-mission analysis of FARE will include evaluation of the experiment equipment, as well as review of camcorder video tapes and 35-mm photographs. Because there will be no real-time data downlink during this experiment, study and analysis of test data will not be conducted until after the mission.

Historically, problems dealing with fluid transfer have been dealt with by using collapsible supply tanks to move liquid without any pressurant gas or vapor surface. These systems are heavier, more complex, more expensive and more prone to leakage during the transfer process than conventional methods of liquid containment, such as the FARE equipment.

During this mission, FARE, managed by NASA's Marshall Space Flight Center, Huntsville, Ala., will use basic equipment developed by Martin Marietta for a previous experiment called the Storable Fluid Management Demonstration (SFMD), which

FARE Middeck Installation

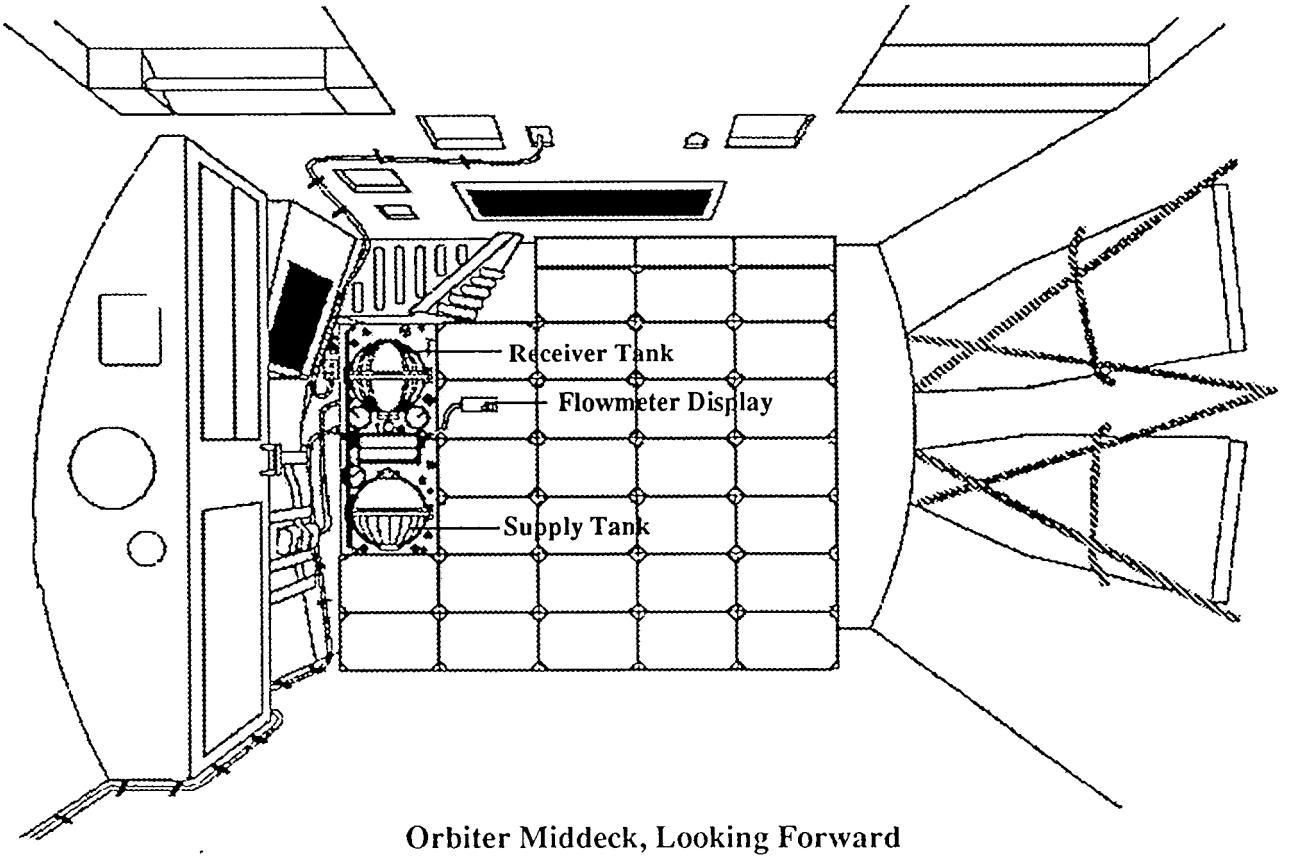

Orbiter Middeck, Looking Forward

FARE Configuration

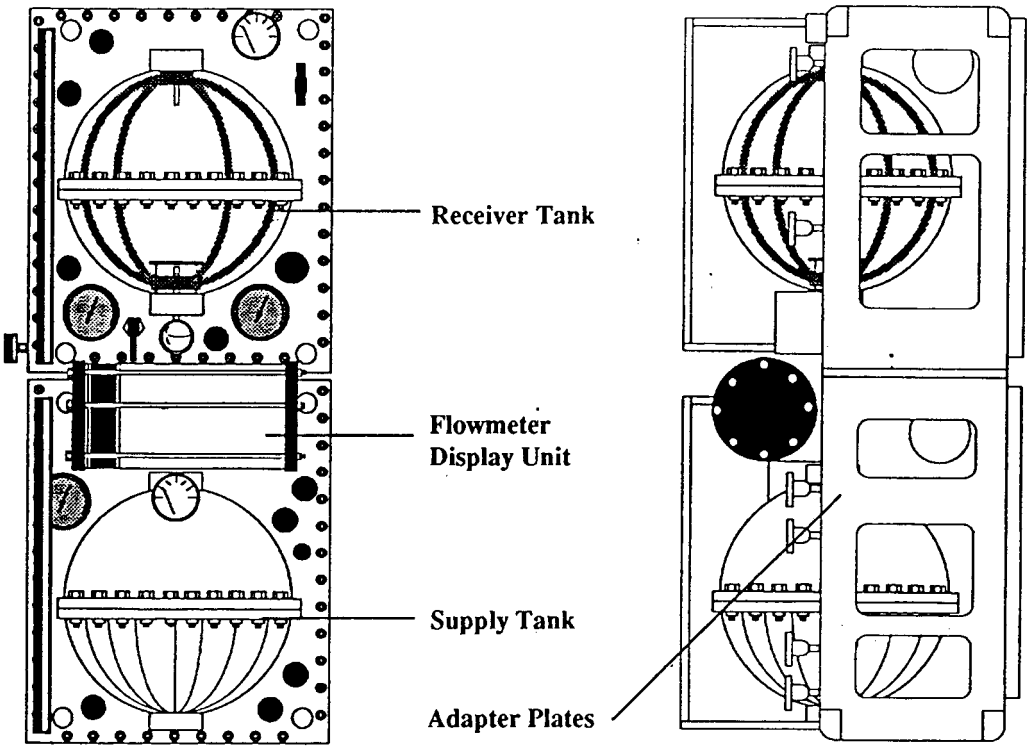

*Envelope: 45" X 22" X 19" (114.3 cm X 55.88 cm X 48.26 cm)

*Tanks:
- *Material: Acrylic
- *Diameter: 12.5" (30.48 cm)
- *Volume: 1022 cubic inches (16,748 cu. cm)

*Test Fluid:
- *Water & Additives
- *Amount: 5.4 gallons (20.52 liters)

flew on STS-51C in 1985. SFMD tested a different configuration of the fluid management device in the receiver tank than what is being tested on FARE. At Marshall, Susan L. Driscoll is Principal Investigator for FARE.

Hand-held, Earth-oriented, Real-time, Cooperative, User- friendly, Location-targeting and Environmental System (HERCULES)

Naval Research Laboratory (NRL), Wash., D.C., scientists have developed a new system that will allow a Shuttle astronaut in space to point a camera at an interesting feature on Earth, record the image and determine the latitude and longitude of the feature.

Called HERCULES, the system is attached to a modified Nikon camera and employs a geolocation process which determines in real-time the latitude and longitude of points on Earth within 2 nautical miles.

HERCULES will provide a valuable Earth observation system for military, environmental, oceanographic and meteorological applications. STS-53 is the first flight of HERCULES. It is scheduled to fly again aboard STS-56 in April 1993. HERCULES is being integrated and flown on the Space Shuttle under the direction of the Department of Defense's Space Test Program.

The project is a joint Navy, Army and NASA effort. Scientists at NRL's Naval Center for Space Technology developed the HERCULES Attitude Processor (HAP) and the alignment, geolocation and human interface software to perform the geolocation. The other components in the system are a NASA-built Electronic Still Camera (ESC), a modified Nikon F-4 and Honeywell ring-laser gyro.

On board the Shuttle, the astronaut will start the system by pointing the camera, with the attached gyro, at two known stars to obtain a bearing. The astronaut then "shoots" images by pointing the camera at the Earth and snapping the shutter.

The camera communicates with HAP, which processes the data from the gyro and determines its absolute orientation in space. Then, the HAP passes this pointing information to the NRL software running on a NASA-modified GRID portable computer. The computer then determines the longitude and latitude of the image.

The geolocation information is sent back to the camera by the HAP, where it is appended to the image data. The astronaut can view the image on the Shuttle and downlink it to Earth. The image and geolocation data also are stored in the ESC system for post-mission analysis.

The system is a significant improvement over its predecessor called L-cubed. Under the L-cubed system, the astronauts had to take multiple images of the same target while simultaneously keeping the edge of the Earth in view, which limited image magnification.

HERCULES

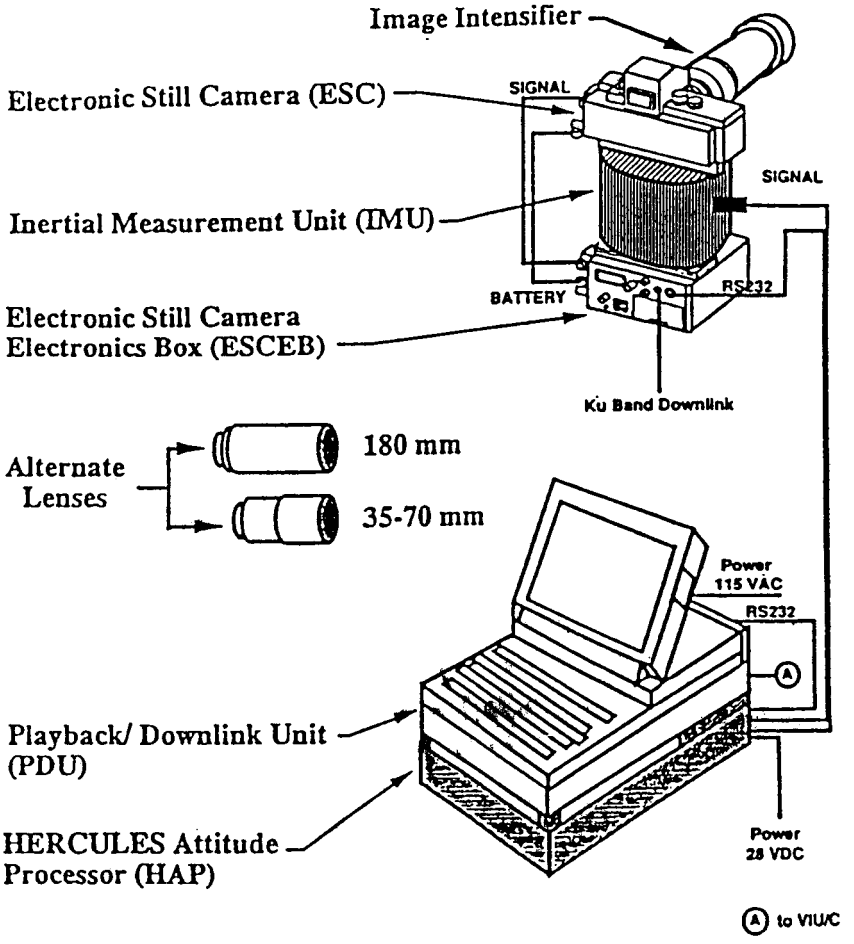

HERCULES Configuration B

With HERCULES, the astronaut only needs to look at the point of interest, allowing the use of many different camera lenses. In the daytime, the system uses any Nikon-compatible lens. At night, it operates with an image intensifier developed by the Army's Night Vision Laboratory. At any magnification, images with no distinguishing demographical features can be captured and geolocated. HERCULES captures images digitally, which allows computer analysis and data dissemination, an improvement over the film-based L-cubed system.

NRL scientists already are exploring enhancements to HERCULES. Incorporating Global Positioning System (GPS) hardware into HERCULES would provide a geolocation accuracy better than 1 nautical mile, and adding a gimbal system would allow the system to automatically track points on Earth.

Microencapsulation In Space (MIS)

Microencapsulation in Space (MIS) will make its maiden flight on board Space Shuttle Discovery. Recently completed by the Controlled Release Division at Southern Research Institute, it is the objective of this Army project to increase the knowledge of microencapsulated drug technology. Sponsored by the U.S. Army Institute of Dental Research (USAIDR), U.S. Army Medical Research and Development Command and partially funded by the U.S. Army Laboratory Command, the experiment will fly several times over the next few years.

MIS is being integrated and flown on the Space Shuttle under the direction of the Department of Defense's Space Test Program. In the first flight, Shuttle astronauts will perform two experiments incorporated in MIS to produce time-release antibiotic microcapsules. The antibiotic, ampicillin, will be microencapsulated with a biodegradable polymer. Scientists at Southern Research Institute and the U.S. Army have reason to believe that microcapsules made in weightlessness will have properties vastly superior to microcapsules made on Earth.

Southern Research Institute scientists Dr. Thomas R. Tice, Principal Investigator, and Dr. Richard J. Holl, Program Manager, were responsible for the conception, design and construction of MIS. Dr. Jean A. Setterstrom of USAIDR, who obtained sponsorship and funding by first proposing the experiment to the Army, is the technical representative/coordinator.

Microcapsules are tiny spheres typically 50 to 100 micrometers in diameter. For comparison, human hair is about 100 micrometers thick, and human blood cells are about 7 micrometers in diameter.

Although microencapsulation was initially used to develop products such as carbonless copy paper and scratch and sniff products, it is now used for innovative pharmaceutical products and high-performance chemical products (smart materials). The use of micro-encapsulated pharmaceutical products has touched us all, ranging from taste-masked pediatric formulations, once- or twice-a-day oral formulations and once-a-month injectable formulations.

MIS MICROCAPSULES IN SPACE

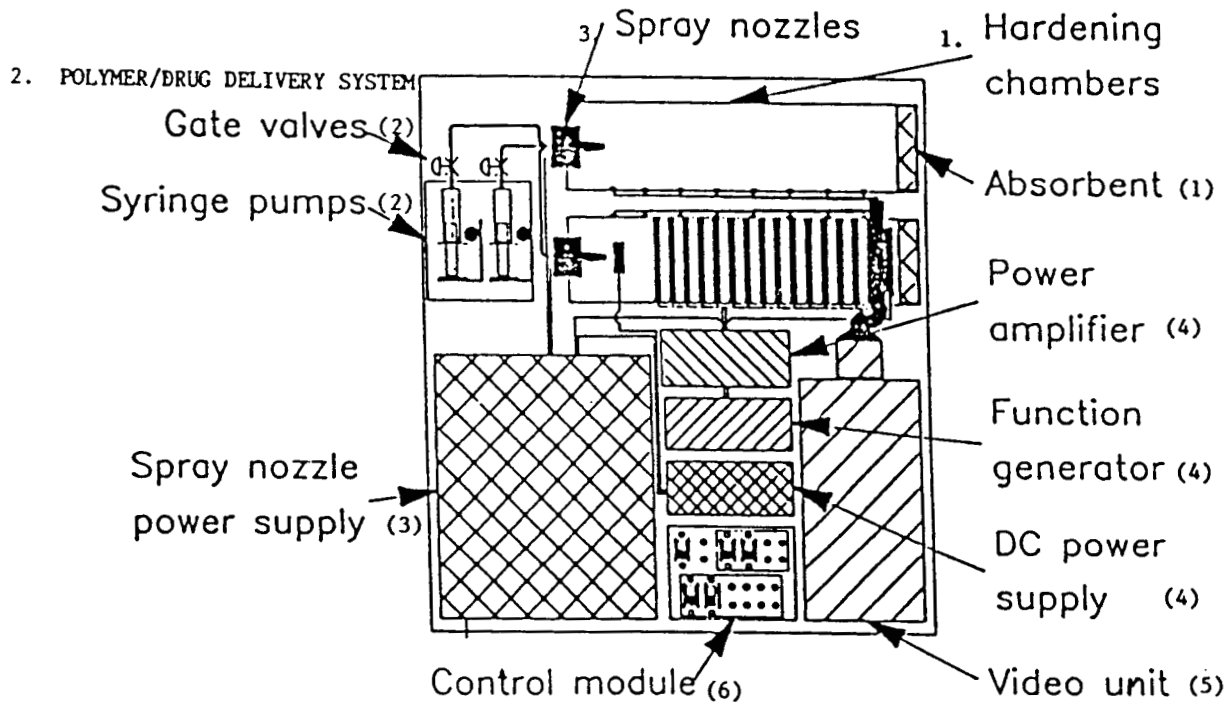

MIS component configuration

These microcapsule products greatly improve therapeutic success. There is no doubt that time-release, drug-delivery technology will provide new approaches for innovative pharmaceutical products of the future.

Scientists expect that the basic and applied knowledge gained from MIS will lead to better pharmaceutical products made on Earth as well as in space. The results of the MIS experiment could lead to new and exciting pharmaceutical manufacturing opportunities on Space Station Freedom.

Radiation Monitoring Equipment-III (RME-III)

RME-III is an instrument which measures the exposure to ionizing radiation on the Space Shuttle. It displays the dose rate and total accumulated radiation dose to the astronaut operator. Simultaneously the device registers the number of radiation interactions and dose accumulated at 10 second intervals and stores the data in an internal memory for follow-up analysis upon return to Earth.

The radiation detector used in the instrument is a spatial ionization chamber called a tissue equivalent proportional counter (TEPC). The device effectively simulates a target size of a few microns of tissue, the dimensions of a typical human cell. For this reason, TEPC-based instruments such as the RME-III are called micro-dosimeter instruments.

RME stands for Radiation Monitoring Equipment, the name given to prototype dosimeter instruments flown on the Space Shuttle prior to STS-26. The RME-III has successfully flown on 12 Space Shuttle missions since STS-26.

RME is being integrated and flown on this mission under the direction of the Defense Department's Space Test Program. It has been flown in conjunction with other radiation experiments, such as the CREAM (Cosmic Radiation Effects and Activation Monitor) and SAM (Shuttle Activation Monitor). It is anticipated that RME will be flown on several future Space Shuttle missions.

The data obtained from the RME-III is archived and is being used to update and refine models of the space radiation environment in low Earth orbit. This will assist space mission planners to more accurately assess risk and safety factors in future long- term space missions, such as Space Station Freedom.

Next generation instruments similar to the RME-III will be flown on Space Station Freedom and on future manned and unmanned missions to the Moon, Mars and beyond. RME-III also is being used to measure radiation exposure in high altitude aircraft such as the Concorde.

Space Tissue Loss (STL)

The Department of Space Biosciences at the Walter Reed Army Institute of Research (WRAIR) in Washington, D.C., will see the second flight of its Space Tissue Loss (STL) model hardware aboard Space Shuttle Discovery. STL is being integrated and flown on the Shuttle under the direction of the Defense Department's Space Test Program.

Visual Funtion Tester

Configuration No. 1

VFT-2

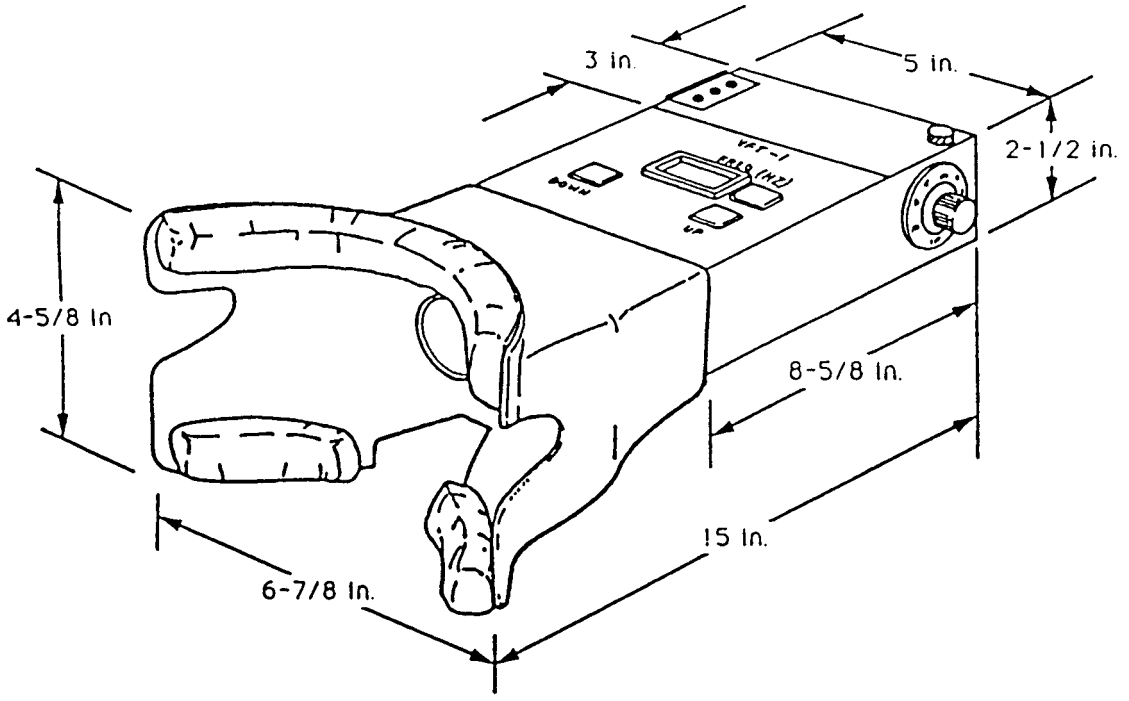

STL

Space Tissue Loss 1 Assembly

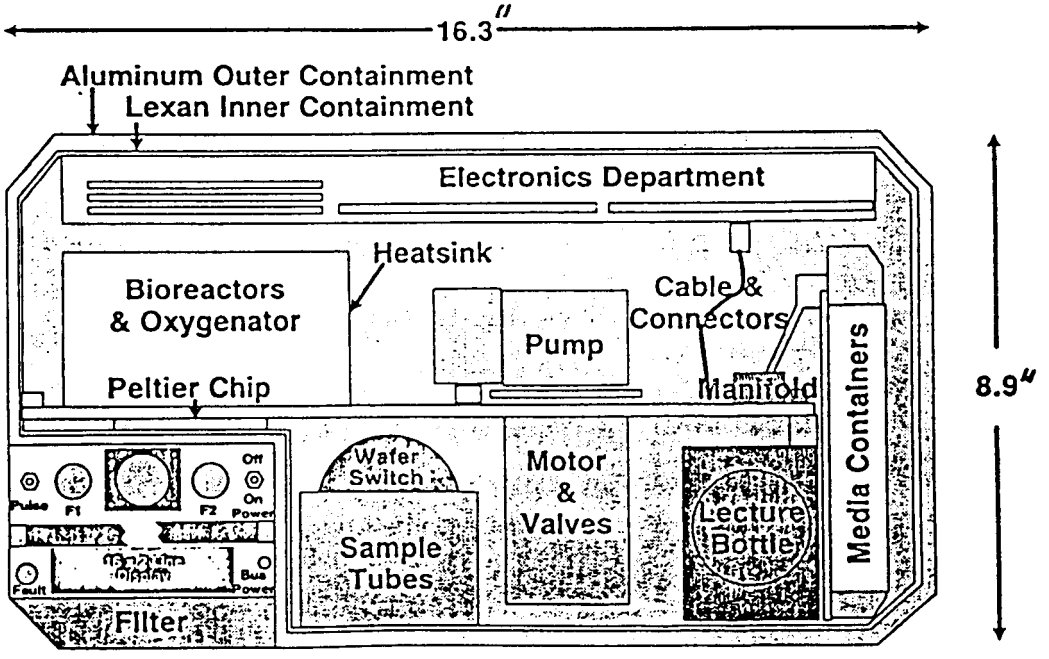

The STL module was developed to help scientists and Army medical practitioners understand more about the effects of space flight on fragile life systems, including the immune system, muscle and bone. When gravity is removed or reduced as in space travel, life systems degrade at a remarkable rate, very much like a rapid aging process or what occurs after severe trauma or infection.

WRAIR and NASA's Life Sciences Division have entered into a joint project to study these effects in space. As part of the project, researchers will place a cell culture device, designed by Army scientists at WRAIR in a middeck payload locker on the Shuttle. The device will allow Walter Reed and NASA researchers to study cells from bone tissue, skeletal muscle, cardiac muscle, endothelial and white blood cells under various conditions. Testing will include the effect of different stimulants, hormones and drugs on cells in the microgravity environment.

The STL study will help scientists understand more about how white cells respond to antigens from infectious agents and tumors. It also will show how space flight can cause the tremendous loss of calcium and minerals from bones and find ways to prevent or minimize bone failure in space and on Earth.

Findings from tests of muscle disintegration could yield more information about similar muscle failure that occurs in forms of Muscular Dystrophy, the loss of muscle mass after severe injury, prolonged bed rest and aging.

Dr. George Kearney, research scientist at Walter Reed Army Institute of Research is the Principal Investigator. Colonel Bill Wiesmann, M.D., Director of the Division of Surgery, WRAIR, is the Program Manager. Tom Cannon, Department of Space Biosciences, WRAIR, is the Project Manager. They are supported by collaborative partners at WRAIR, the Armed Forces Institute of Pathology, NASA's Ames Research Center, University of Louisville Medical School, and a Defense Department's Space Test Program team of personnel from the Air Force, The Aerospace Corporation and Rockwell International.

Visual Function Tester - Model II (VFT-2)

Since 1984, Air Force scientists of the Armstrong Laboratory at Wright-Patterson AFB, Ohio, have been conducting a series of vision performance experiments on the Space Shuttle to assess the effect of microgravity on visual function.

The second test device now being used is the Visual Function Tester - Model II (VFT-2), which measures the sensitivity of the eye to image contrast at threshold. The device is small, hand-held, battery-powered and presents three types of image patterns to the eye. This is the sixth in a series of flights with this tester.

Two of the astronauts on STS-53 will participate in the experiment. They receive training in the use of VFT-2 and will take the test twice prior to space flight to establish their baseline performance, use VFT-2 daily while in orbit, at landing and two times post-flight. The primary purpose of these vision

experiments is to determine if any change in vision occurs while in space and if so, are the changes clinically significant and how quickly the individual recovers.

Dr. Lee Task, research physicist, and Dr. (Lt. Col.) Mel O'Neal, research optometrist, of the Human Engineering Division, are the principal investigators for the VFT-2. They are assisted by personnel from the Air Force and Rockwell International located at the Johnson Space Center, Houston. This payload is a Department of Defense Space Test Program secondary experiment.

STS-53 CREW BIOGRAPHIES

David M. Walker, 48, Capt., USN, will command STS-53. Selected as an astronaut in January 1978, Walker considers Eustis, Fla., his hometown and will be making his third space flight.

Walker graduated from Eustis High School in 1962 and received a bachelor's degree from the Naval Academy in 1966. After being designated a naval aviator in 1967, he was assigned to the aircraft carriers USS Enterprise and USS America flying F-4 Phantom aircraft. In 1971, he graduated from the Air Force Aerospace Research Pilot school and was assigned as a test pilot at the Naval Air Test Center. Walker has logged more than 5,500 flying hours.

His first Shuttle flight was as Pilot of STS-51A in November 1984. He next flew as Commander of STS-30 in May 1989. He has logged a total of 289 hours in space.

Robert D. Cabana, 43, Col., USMC, will be Pilot. Selected as an astronaut in June 1985, Cabana considers Minneapolis his hometown and will be making his second space flight.

Cabana graduated from Washburn High School in Minneapolis in 1967 and received a bachelor's degree in mathematics from the Naval Academy in 1971. He completed Naval Flight Officer training in 1972 and served as an A-6 bombardier/navigator with the Marine Air Wings in Cherry Point, N.C., and Iwakuni, Japan. In 1976, he was designated a naval aviator and was assigned as an A-6 Intruder pilot at Cherry Point. He graduated from the Naval Test Pilot School in 1981 and was assigned to the Naval Air Test Center. Cabana has logged more than 4,100 hours in 32 different aircraft.

Cabana's first Shuttle flight was as Pilot of STS-41 in October 1990. He has logged 98 hours in space.

Guion S. Bluford, Jr., 50, Col., USAF, will be Mission Specialist 1 (MS1). Selected as an astronaut in August 1979, Bluford considers Philadelphia his hometown and will be making his fourth space flight.

Bluford graduated from Overbrook Senior High School in Philadelphia in 1960; received a bachelor's degree in aerospace engineering from Penn State in 1964; received a master's in aerospace engineering from the Air Force Institute

of Technology in 1974; received a doctorate in aerospace engineering with a minor in laser physics from the Air Force Institute of Technology in 1978 and received a master in business administration from the University of Houston in Clear Lake in 1987.

Bluford first flew as a mission specialist on STS-8 in September 1983. His next flight was as a mission specialist on STS-61A in November 1985. His third flight was as a mission specialist on STS-39 in April 1991. He has logged more than 513 hours in space.

James S. Voss, 43, Lt. Col., USA, will be Mission Specialist 2 (MS2). Selected as an astronaut in June 1987, Voss considers Opelika, Ala., his hometown and will be making his second space flight.

Voss graduated from Opelika High School; received a bachelor's degree in aerospace engineering from Auburn University in 1972 and received a master's in aerospace engineering from the University of Colorado in 1974.

Voss began working at the Johnson Space Center in 1984, supporting Shuttle and payload testing at the Kennedy Space Center as a Vehicle Integration Test Engineer until his selection as an astronaut. His first Shuttle flight was STS-44 in November 1991. Voss has logged 166 hours in space.

Michael Richard Clifford, 40, Lt. Col., USA, will be Mission Specialist 3 (MS3). Selected as an astronaut in January 1990, Clifford considers Ogden, Utah, his hometown and will be making his first space flight.

Clifford graduated from Ben Lomond High School in Ogden in 1970; received a bachelor's degree from U.S. Military Academy at West Point in 1974 and received a master's degree in aerospace engineering from the Georgia Institute of Technology in 1982.

After graduation from West Point, Clifford was commissioned in the U.S. Army and assigned with the 10th Calvary in Fort Carson, Colo., for 2 years before entering the Army Aviation School in 1976. He was designated an Army aviator in 1976 and assigned with the Attack Troop, 2nd Armored Calvary in Nuremberg, West Germany. After completing his master's, he was assigned as an instructor and assistant professor at West Point in 1982. In 1986, he graduated from the Naval Test Pilot School. Clifford has logged more than 2,700 flying hours in fixed and rotary-wing aircraft.

He was assigned to NASA by the military in 1987 and worked at the Johnson Space Center as a Shuttle vehicle integration engineer until his selection as an astronaut.

MISSION MANAGEMENT FOR STS-53

NASA HEADQUARTERS, WASHINGTON, D.C.

Office of Space Flight

Jeremiah W. Pearson III - Associate Administrator
Bryan O'Connor - Deputy Associate Administrator
Tom Utsman - Space Shuttle Program Director
Leonard Nicholson - Space Shuttle Program Manager (located at JSC)
Brewster Shaw - Deputy Space Shuttle Program Manager (Located at KSC)

Office of Space Science and Applications

Dr. Lennard Fisk - Associate Administrator
Al Diaz - Deputy Associate Administrtor

Office of Aeronautics and Space Technology

Richard H. Petersen - Associate Administrator
Gregory M. Reck - Director for Space Technology
Jack Levine - Manager, Space Experiments Office
Arthur R. Lee - Program Manager, Cryogenic Heat Pipe

Office of Safety and Mission Quality

Col. Federick Gregory - Associate Administrator
Dr. Charles Pellerin, Jr. - Deputy Associate Administrator
Richard Perry - Director, Programs Assurance

DEPARTMENT OF DEFENSE PAYLOAD MANAGEMENT

Key Management Participants

Mission Director
Brigadier General Donald R. Walker, USAF, Director, Office of Space Systems, Office of the Secretary of the Air Force

Deputy Mission Director
Colonel Robert Ballard, USAF, Program Manager, Space Test and Transportation Systems, HQ, Space and Missile Systems Center, Los Angeles AFB, Calif.

Assistant Deputy Mission Director
Lt. Colonel James McLeroy, USAF, Executive Director, Operating Location AW (HQ Space and Missile Systems Center), at Johnson Space Center, Houston

Mission Director Action Officer
Major Butch Domino, USAF, JSC/OL-AW

Secondary Payload Managers (JSC/OL-AW):
Captain John Hennessey, USAF
Captain Richard Martinez, USAF
Captain Reid Maier, USAF
Captain David Goldstein, USAF

KENNEDY SPACE CENTER, FLA.

Robert L. Crippen - Director
James A. "Gene" Thomas - Deputy Director
Jay F. Honeycutt - Director, Shuttle Management and Operations
Robert B. Sieck - Launch Director
David A. King - Discovery Flow Director
J. Robert Lang - Director, Vehicle Engineering
Al J. Parrish - Director of Safety Reliability and Quality Assurance
John T. Conway - Director, Payload Management and Operations
P. Thomas Breakfield - Director, Shuttle Payload Operations
Joanne H. Morgan - Director, Payload Project Management
Ralph Schuiling - STS-53 Payload Processing Manager

MARSHALL SPACE FLIGHT CENTER, HUNTSVILLE, ALA.

Thomas J. Lee - Director
Dr. J. Wayne Littles - Deputy Director
Harry G. Craft - Manager, Payload Projects Office
Alexander A. McCool - Manager, Shuttle Projects Office
Dr. George McDonough - Director, Science and Engineering
James H., Ehl - Director, Safety and Mission Assurance
Otto Goetz - Manager, Space Shuttle Main Engine Project
Victor Keith Henson - Manager, Redesigned Solid Rocket Motor Project
Cary H. Rutland - Manager, Solid Rocket Booster Project
Parker Counts - Manager, External Tank Project

JOHNSON SPACE CENTER, HOUSTON

Aaron Cohen - Director
Paul J. Weitz - Acting Director
Daniel Germany - Manager, Orbiter and GFE Projects
Dr. Steven Hawley - Acting Director, Flight Crew Operations
Eugene F. Kranz - Director, Mission Operations
Henry O. Pohl - Director, Engineering
Charles S. Harlan - Director, Safety, Reliability and Quality Assurance

STENNIS SPACE CENTER, BAY ST. LOUIS, MISS.

Roy S. Estess - Director
Gerald Smith - Deputy Director
J. Harry Guin - Director, Propulsion Test Operations

AMES RESEARCH CENTER, MOUNTAIN VIEW, CALIF.

Dr. Dale L. Compton - Director
Victor L. Peterson - Deputy Director
Dr. Joseph C. Sharp - Director, Space Research

AMES-DRYDEN FLIGHT RESEARCH FACILITY, EDWARDS, CALIF.

Kenneth J. Szalai - Director
T. G. Ayers - Deputy Director
James R. Phelps - Chief, Shuttle Support Office

GODDARD SPACE FLIGHT CENTER, GREENBELT, MD.

Dr. John M. Klineberg - Director
Peter T. Burr - Deputy Director
Vernon J. Weyers - Director, Flight Projects Directorate

SHUTTLE FLIGHTS AS OF OCTOBER 1992

51 TOTAL FLIGHTS OF THE SHUTTLE SYSTEM - 26 MISSIONS CONDUCTED SINCE RETURN TO FLIGHT.

14
13
12
11
10
09
08
07
06
05
04
03
02
01

OV-099 CHALLENGER	OV-102 COLUMBIA	OV-103 DISCOVERY	OV-104 ATLANTIS	OV-105 ENDEAVOUR
STS 51-L 01/28/86	STS-52 October 1992	STS-42 01/22/92 - 01/30/92	STS-46 7/31/92 - 8/8/92	STS-47 09/12/92 - 09/20/92
STS 61-A 10/30/85 - 11/06/85	STS-50 06/25/92 - 07/09/92	STS-48 09/12/91 - 09/18/91	STS-45 03/24/92 - 04/02/92	STS-49 05/07/92 - 05/16/92
STS 51-F 07/29/85 - 08/06/85	STS-40 06/05/91 - 06/14/91	STS-39 04/28/91 - 05/06/91	STS-44 11/24/91 - 12/01/91	
STS 51-B 04/29/85 - 05/6/85	STS-35 12/02/90 - 12/10/90	STS-41 10/06/90 - 10/10/90	STS-43 08/02/91 - 08/11/91	
STS 41-G 10/5/84 - 10/13/84	STS-32 01/09/90 - 01/20/90	STS-31 04/24/90 - 04/29/90	STS-37 04/05/91 - 04/11/91	
STS 41-C 04/06/84 - 04/13/84	STS-28 08/08/89 - 08/13/89	STS-33 11/22/89 - 11/27/89	STS-38 11/15/90 - 11/20/90	
STS 41-B 02/03/84 - 02/11/84	STS 61-C 01/12/86 - 01/18/86	STS-29 03/13/89 - 03/18/89	STS-36 02/28/90 - 03/04/90	
STS-8 08/30/83 - 09/05/83	STS-9 11/28/83 - 12/08/83	STS-26 09/29/88 - 10/03/88	STS-34 10/18/89 - 10/23/89	
STS-7 06/18/83 - 06/24/83	STS-5 11/11/82 - 11/16/82	STS 51-I 08/27/85 - 09/03/85	STS-30 05/04/89 - 05/08/89	
STS-6 04/04/83 - 04/09/83	STS-4 06/27/82 - 07/04/82	51-G 06/17/85 - 06/24/85	STS-27 12/02/88 - 12/06/88	
	STS-3 03/22/82 - 03/30/82	51-D 04/12/85 - 04/19/85	STS 61-B 11/26/85 - 12/03/85	
	STS-2 11/12/81 - 11/14/81	STS 51-C 01/24/85 - 01/27/85	STS 51-J 10/03/85 - 10/07/85	
	STS-1 04/12/81 - 04/14/81	STS 51-A 11/07/84 - 11/15/84		
		STS 41-D 08/30/84 - 09/04/84		

Upcoming Space Shuttle Flights

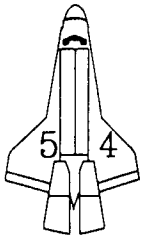

Endeavour

1993
Pad 39-B

Launch targeted for January. Tracking and Data Relay Satellite-06. 28.5 degrees inclination/185 st. miles. Six days. Crew: John H. Casper; Donald R. McMonagle; Gregory J. Harbaugh; Mario Runco; Susan J. Helms.

Landing: KSC

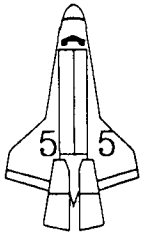

Columbia

1993
Pad 39-A

Launch targeted for February. SL-D2 (Second German Spacelab mission). 28.5 degrees inclination/185 st. miles. Nine days. Crew: Steve Nagel; Tom Henricks; Jerry L. Ross; Charles Precourt; Bernard A. Harris Jr.; Hans Schlegel; Ulrich Walter.

Landing: KSC

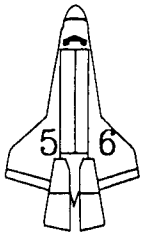

Discovery

1993
Pad 39-B

Launch targeted for March. Atlas-02, SSBUV, SPTN (x-ray astronomy experiment on free-flyer). 57 degrees inclination/185 st. miles. Eight days. Crew: Kenneth Cameron; Stephen S. Oswald; Kenneth D. Cockrell; Michael Foale; Ellen Ochoa.

Landing: KSC

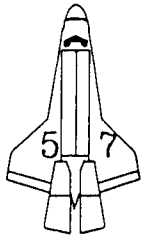

Endeavour

1993
Pad 39-B

Launch targeted for April/May. EURECA retrieval. Spacehab-01. 28.5 degrees inclination/288 st. miles. Seven days. Crew: Ronald J. Grabe; Brian J. Duffy; G. David Low; Janice E. Voss; Nancy J. Sherlock; Peter J. K. "Jeff" Wisoff.

Landing: KSC

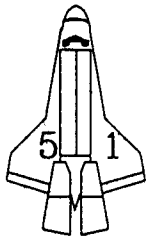

Discovery

1993
Pad 39-B

Launch targeted for June/July. Advanced Communications Technology Satellite; ORFEUS-SPAS. 28.5 degrees inclination/185 st. miles. Nine days. Crew: Frank L. Culbertson Jr; William F. Readdy; Daniel W. Bursch; James H. Newman; Carl E. Walz.

Landing: KSC

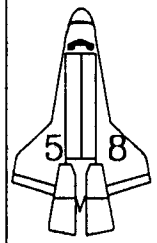

Columbia

1993
Pad 39-B

Launch targeted for August/September. Space Life Sciences-2. 39 degrees inclination/176 st. miles. Thirteen days. Crew: John Blaha; Richard Searfoss; Rhea Seddon; Shannon Lucid; Bill McArthur Jr.; David Wolf.

Landing: EAFB

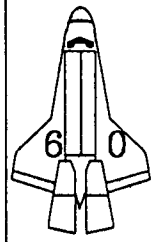

Discovery

1993
Pad 39-B

Launch targeted for November. Payloads include Spacehab-2, Wake Shield Facility-01 and Generic Bioprocessing Apparatus. Inclination 28.5 degrees/185 st. miles. Seven days. Crew: TBD. US/Russian crew exchange flight.

Landing: KSC

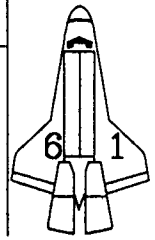

Endeavour

1993
Pad 39-A

Launch targeted for December. Mission includes Hubble Space Telescope optical correction, SM-1, ICBC. Inclination 28. 5 degrees/368 st. miles. Eight days. Crew: Story Musgrave; Tom Akers; Jeffrey A. Hoffman; Kathryn C. Thornton. Commander/pilot TBD.

Landing: KSC

SOME NOTES ON THIS SCHEDULE: This is an unofficial Space Shuttle launch schedule covering the period of January 1993 through December 1993 Crew listings name commanders first, then pilots, then mission and payload specialists. This flight listing is based on the January 1992 Mixed Fleet Manifest. This graph is prepared by the Kennedy Space Center Public Information Office and is dated October 6, 1992. Abbreviations used include: EPD = Earliest Possible Date. TBD = To Be Determined. Official launch dates are set at the Flight Readiness Review.

NASA News

National Aeronautics and
Space Administration

Washington, D.C. 20546
AC 202 453-8400

ISY

For Release

October 26, 1992

Michael Braukus
Headquarters, Washington, D.C.
(Phone: 202/358-1547)

Mitch Varnes
Kennedy Space Center, Fla.
(Phone: 407/867-2468)

Robert MacMillin
Jet Propulsion Laboratory, Pasadena, Calif.
(Phone: 818/354-5011)

Maj. Mike Doble
Department of Defense, Pentagon, Washington, D.C.
(Phone: 703/693-1778)

EDITORS NOTE: N92-92

NASA TO LAUNCH DEFENSE SATELLITE ON SCOUT ROCKET

A NASA Scout rocket is scheduled to be launched from Space Complex 5 at Vandenberg Air Force Base, Calif., on Friday, Oct. 30, carrying a Department of Defense payload called Miniature Seeker Technology Integration (MSTI). The launch window opens at 8:42 a.m. EST and extends until 9:42 a.m.

The launch of Scout/MSTI will be carried live on NASA Select TV. However, if Space Shuttle mission activities prevent live coverage of the Scout/MSTI launch, a taped replay of the launch and significant processing and countdown activities will be aired at the first opportunity. The broadcast also may be monitored on the V-circuits by calling 407/867-1260.

The Scout/MSTI News Center at Vandenberg Air Force Base will be located in Building 840, the NASA Administrative Headquarters. The News Center will open 4 days before launch and can be reached by calling 805/734-8232 ext. 53820.

- end -

NASA News

National Aeronautics and
Space Administration

Washington, D.C. 20546
AC 202 453-8400

ISY

Brian Dunbar
Headquarters, Washington, D.C.
(Phone: 202/358-1547)

Mary A. Hardin
Jet Propulsion Laboratory, Pasadena, Calif.
(Phone: 818/354-5011)

For Release
October 27, 1992

RELEASE: 92-186

NASA SPACEBORNE IMAGING REVEALS UNKNOWN EARTHQUAKE FAULTS

Geologists at NASA's Jet Propulsion Laboratory (JPL), Pasadena, Calif., and Louisiana State University, Baton Rouge, have discovered several previously unknown earthquake faults in California's northeastern Mojave Desert by analyzing remote sensing images at optical, infrared and radar wavelengths.

In a paper presented today at the annual meeting of the Geological Society of America in Cincinnati, JPL's Dr. John Ford outlined how spaceborne imaging technology has helped scientists find these newly observed faults, many of which are located within Fort Irwin, Calif., an active military training area.

Analysis of the remote sensing images, combined with field observations and earthquake information, indicate that the area is crossed by many young faults. These faults are part of the same system that produced the magnitude 7.5 earthquake that occurred June 28, 1992, at Landers, Calif.

The faults are visible on computer processed images taken by the Thematic Mapper instrument on Landsat 5 which obtains images simultaneously in seven bands at optical and infrared wavelengths. Corresponding images of the area from the French SPOT satellite and the NASA airborne synthetic aperture radar images confirmed the existence of the faults. Scientists say this study will lead to better understanding of how the entire system of faults works in southern California.

In addition to Ford, the research is being conducted by geologists Dr. Robert E. Crippen of JPL and Professor Roy K. Dokka of the Department of Geology and Geophysics at Louisiana State University.

The project is funded by NASA's Solid Earth Branch of the Office of Space Science and Applications, Washington, D.C. Support and safety control of the field investigations were provided by the U.S. Army at the National Training Center, Fort Irwin.

- end -

NASA News

National Aeronautics and
Space Administration

Washington, D.C. 20546
AC 202 453-8400

ISY

For Release

Mark Hess
Headquarters, Washington, D.C.
(Phone: 202/453-8536)

October 27, 1992

Barbara Schwartz
Johnson Space Center, Houston
(Phone: 713/483-5111)

RELEASE: 92-187

MISSION SPECIALISTS NAMED FOR IML-2 MISSION

Leroy Chiao, Ph.D., and Donald A. Thomas, Ph.D., are assigned as mission specialists on the International Microgravity Laboratory-2, Space Shuttle mission STS-65, scheduled for June 1994

"Both Don and Leroy bring strong materials science backgrounds to the IML-2 payload crew. Their strengths will complement the previously assigned crew members in achieving the multi-science objectives of this important international mission," said Acting Director of Flight Crew Operations Steven A. Hawley.

Chiao, 32, holds a Ph.D. degree in chemical engineering from the University of California. Born in Milwaukee, Wisc., he considers Danville, Calif., his hometown. Chiao was selected by NASA in 1990. He has worked on Space Shuttle flight software verification in the Shuttle Avionics Integration Laboratory and currently is working crew equipment issues in the Mission Development Branch of the Astronaut Office.

Thomas, 42, has a doctorate degree in materials science from Cornell University. His dissertation involved evaluating the effect of crystalline defects and sample purity on the superconducting properties of niobium. He was born in Cleveland. Thomas, also in the astronaut class of 1990, has worked on issues relating to the Shuttle orbiter systems in the Safety and Operations Development Branches of the Astronaut Office. He currently is serving as a CAPCOM, an astronaut in the Mission Control Center who communicates with the Space Shuttle crew members during a mission.

Other crew members previously named to this microgravity mission are Payload Commander Richard J. Hieb and Chiaki Mukai, Ph.D. and M.D., a payload specialist from the National Space Development Agency of Japan.

- end -

NASA News

National Aeronautics and
Space Administration

Washington, D.C. 20546
AC 202 453-8400

ISY

Ed Campion
Headquarters, Washington, D.C.
(Phone: 202/453-1134)

Barbara Schwartz
Johnson Space Center, Houston
(Phone: 713/483-5111)

For Release October 28, 1992

RELEASE: 92-188

NASA NAMES CREW FOR STS-60 MISSION WITH COSMONAUT

Charles F. Bolden, Jr. (Col., USMC) will command Space Shuttle mission STS-60 in November 1993. Other crew members are Pilot Kenneth S. Reightler, Jr. (Capt., USN), and mission specialists Franklin R. Chang-Diaz, Ph.D., N. Jan Davis, Ph.D., Ronald M. Sega, Ph.D., and an experienced Russian cosmonaut.

"This flight is a significant milestone in future space exploration from a scientific research standpoint as well as being the first step in our cooperative agreements with our Russian partners. We can expect tremendous accomplishments from this group of individuals, considering the outstanding credentials and backgrounds they bring to this mission," said Acting Director of Flight Crew Operations Steven A. Hawley.

Bolden, 46, piloted two Space Shuttle missions, STS-61C in January 1986 and STS-31 in April 1990, and commanded the Atmospheric Laboratory for Applications and Science mission STS-45 in March 1992. In addition to his flight experience, Bolden has held a number of management positions since his selection as an astronaut in 1980.

Most recently, Bolden was appointed Assistant Deputy Administrator at NASA Headquarters in Washington, D.C., in April. Bolden was born in Columbia, S.C., and has a bachelor of science degree in electrical science from the U.S. Naval Academy and a master of science degree in systems management from the University of Southern California.

Reightler, 41, was Pilot on Space Shuttle mission STS-48 on which the crew successfully deployed the Upper Atmosphere Research Satellite. Born in Patuxent River, Md., Reightler considers Virginia Beach, Va., to be his hometown.

- more -

Selected by NASA in June 1987, Reightler's current assignment is Chief of the Mission Support Branch in the Astronaut Office and Lead CAPCOM in Mission Control, responsible for communications with Space Shuttle crew members during flight. Reightler has master of science degrees in aeronautical engineering from the U.S. Naval Postgraduate School and in systems management from the University of Southern California.

Chang-Diaz, 42, is a veteran of three space flights -- STS-61C in January 1986, STS-34 in October 1989 and STS-46 in August 1992. Selected to become an astronaut in 1980, Chang-Diaz has a doctorate in applied plasma physics from the Massachusetts Institute of Technology. He was born in San Jose, Costa Rica.

Davis, 38, flew on STS-47 Spacelab-J, a cooperative mission with the National Space Development Agency of Japan, in September 1992. Davis was born in Cocoa Beach, Fla., but considers Huntsville, Ala., to be her hometown. Selected to become an astronaut in June 1987, Davis has a doctorate in mechanical engineering from the University of Alabama, Huntsville.

Sega, 39, was selected in January 1990 and has a doctorate in electrical engineering from the University of Colorado. This will be his first space flight. Sega is an Adjunct Professor of Physics at the University of Houston and is a Co-Principal Investigator of the Wake Shield Facility which is manifested for this flight. Born in Cleveland, Sega considers Northfield, Ohio, and Colorado Springs, Colo., to be his hometowns.

An experienced cosmonaut will fly aboard the STS-60 Space Shuttle mission. The Russian Space Agency has nominated Col. Vladimir G. Titov and Sergei K. Krikalev to undergo mission specialist training. One cosmonaut will be designated the prime crew member and the other designated backup crew member. The cosmonauts will arrive at the Johnson Space Center in early November.

Mission objectives include a number of microgravity experiments in SPACEHAB-2, the Wake Shield Facility experiment to test the creation of an ultra-vacuum in which to produce extremely pure thin film crystals for industrial uses ranging from microelectronics to lasers and superconductivity, a Capillary Pumped Loop Experiment to study a method of heat dissipation in space and a number of small experiments known as Getaway Specials flown in a bridge assembly in the orbiter's payload bay. Additionally, Russian Space Agency-sponsored life science activities will be included in the mission.

- end -

NASA News

National Aeronautics and
Space Administration

Washington, D.C. 20546
AC 202 453-8400

ISY

Paula Cleggett-Haleim
Headquarters, Washington, D.C.
(Phone: 202/358-1547)

Franklin O'Donnell
Jet Propulsion Laboratory, Pasadena, Calif.
(Phone: 818/354-5011)

For Release
October 29, 1992

RELEASE: 92-189

STARS IN DISTANT GALAXY MUCH YOUNGER THAN EARLIER ESTIMATE

A distant radio galaxy once thought to contain old stars -- older than some estimates of the age of the universe -- may instead be a very young system caught in the act of formation, astronomers report.

The finding, by Dr. Peter Eisenhardt of NASA's Jet Propulsion Laboratory, Pasadena, Calif., and graduate student Mark Dickinson of the University of California at Berkeley, is reported in the Nov. 1 issue of the Astrophysical Journal (Letters).

According to Eisenhardt and Dickinson, radio galaxy B2 0902+34 in the constellation Lynx previously mystified astronomers because its stars seemed to be much older than the universe itself.

The universe was about 1 billion years old when the light seen today left the galaxy, the astronomers say. Light from stars within the galaxy, however, suggested the stars were much older than 1 billion years at the time.

Astronomers believe the universe is about 13 billion years old.

"Our new finding resolves the problem of how these stars possibly could be older than the universe," said Eisenhardt.

"In fact," he added, "it now appears that this object may be a protogalaxy -- one of the holy grails of astronomy." Since the 1960s, astronomers have been searching for examples of galaxies in the process of forming.

- more -

The previous estimate for the age of the stars in galaxy B2 0902+34 came from 1988 observations by Dr. Simon Lilly, then an astronomer at the University of Hawaii.

Lilly's measurement set the record for the most distant galaxy then discovered. At more than 10 billion light-years, B2 0902+34 is still among the most distant known galaxies today.

Because astronomers were looking back across nearly 90 percent of the age of the universe in observing the light from the galaxy, B2 0902+34 should have been a very young galaxy. Yet Lilly found that the galaxy had a very red color, a sign of old age.

In their new observations at Kitt Peak National Observatory, Eisenhardt and Dickinson measured a color 10 times bluer for the galaxy, indicating its age is much younger than previously thought.

"The galaxy's color is so blue, as a matter of fact, that it is a good candidate for a protogalaxy still in the process of forming the bulk of its stars," said Eisenhardt.

He said that the discrepancy between the new observations and Lilly's measurements is due in part to a problem with the infrared camera used by Lilly in 1988. In addition, Eisenhardt says the starlight is contaminated by emission from hot oxygen gas, which Lilly's report on the galaxy did not take into account.

Eisenhardt's and Dickinson's work is supported by funding from NASA's Office of Space Science and Applications, Washington, D.C.

- end -

NASA News

National Aeronautics and
Space Administration

Washington, D.C. 20546
AC 202 453-8400

ISY

Michael Braukus
Headquarters, Washington, D.C.
(Phone: 202/358-1547)

Kari Fluegel
Johnson Space Center, Houston
(Phone: 202/483-5111)

For Release
October 29, 1992

RELEASE: 92-190

PAYLOAD SPECIALIST SELECTED FOR SECOND LIFE SCIENCES MISSION

NASA today announced the selection of Dr. Martin J. Fettman, D.V.M., as the prime payload specialist for the second Spacelab Life Sciences mission (SLS-2) scheduled for launch in August 1993.

"NASA's series of SLS missions play a central role in our program of space biomedical research," said Dr. Lennard A. Fisk, Associate Administrator for the Office of Space Science and Applications. "The experiments that Dr. Fettman and his fellow SLS-2 crew members conduct will give us valuable information on how living and working in space affects the human body."

Fettman, a professor in the Department of Pathology in Colorado State University's College of Veterinary Medicine, will join the previously named STS-58 crew consisting of Commander John Blaha, Col., USAF; Pilot Richard Searfoss, Maj., USAF; Payload Commander Rhea Seddon, M.D., and mission specialists William S. McArthur Jr., Lt. Col. USA; Shannon Lucid, Ph.D., and David Wolfe, M.D.

Jay Buckey, M.D., assistant professor at the University of Texas Southwestern Medical Center in Dallas, and Laurence Young, Sc.D., professor of aeronautics and astronautics at Massachusetts Institute of Technology, will serve as alternate payload specialists and will be the primary communicators with the payload crew during the 13-day mission focusing on the effects of microgravity on the human body. Buckey and Young also will train with the crew so they could substitute should Fettman become unable to fly.

The SLS-2 mission is the second in a series of Spacelab Life Sciences flights. SLS-1, June 5-14, 1991, provided an opportunity for scientists to study the effects of weightlessness in a comprehensive interrelated fashion using both human and animal subjects.

- more -

Most of the experiments assigned to SLS-2 are extensions of the data collection started on SLS-1. A total of 14 experiments will be flown, concentrating on the cardiovascular/cardiopulmonary systems, neuroscience, regulatory physiology and the musculoskeletal system.

Several NASA centers and organizations are involved in the development of the SLS-2 payload. Human experiments are being developed by the Life Sciences Project Division at the Johnson Space Center (JSC), Houston, while the non-human experiments are being developed by the Space Life Sciences Payloads Office at the Ames Research Center, Mountain View, Calif.

The program is managed by NASA's Office of Space Science and Applications, Washington, D.C. Gary W. McCollum is the SLS-2 Program Manager, and Dr. Frank M. Sulzman is the Program Scientist.

Mission Scientist is Dr. Howard J. Schneider, and Mission Manager is Kathryn E. Newkirk, both of JSC.

- end -

NASA News

National Aeronautics and
Space Administration

Washington, D.C. 20546
AC 202 453-8400

ISY

Mark Hess
Headquarters, Washington, D.C.
(Phone: 202/453-4164)

For Release
October 29, 1992

RELEASE: 92-191

'EXPRESS PROGRAM' TO EXPEDITE SCIENCE ON FREEDOM SPACE STATION

A common complaint by space scientists is that it takes too long to conduct an experiment in space and get the data back.

A new effort by the Space Station Freedom program has been initiated to dramatically reduce the time it would take to integrate small experiments on the Space Station Freedom.

"It's called EXPRESS, for Expedited Processing of Experiments to Space Station," says Robert Moorehead, Deputy Director of Space Station Freedom. "Under this effort, we will build the hardware and develop the procedures necessary for rapid integration of small payloads on Freedom."

"We established the EXPRESS project because we are committed to developing a user-friendly space station through the small payloads program which will support innovative scientific, technological and commercial research through a streamlined payload integration process," Moorehead said.

Currently, it can take up to 5 years to get an experiment integrated on a Shuttle or Spacelab mission. Spacelab is a pressurized laboratory which flies in the cargo bay of the Space Shuttle.

"We hope we can cut the time it takes to get a small payload flown aboard Freedom to less than a year," says Mark Uhran, Manager of the EXPRESS Payload Project.

"Freedom's three laboratories contain more than 40 refrigerator-sized experiment racks. These racks supply the experiments with electricity, cooling, data lines and other services," says Uhran. "They are called International Standard Payload Racks because the services are identical in the United States, European and Japanese modules."

- more -

Commonality Concept

"The EXPRESS concept is to build a common set of hardware that will fit in these common racks, like drawers in a dresser," says Uhran.

A typical payload well suited to the EXPRESS concept would weigh between 50 (22.7 kg) and 100 pounds (45.5 kg). "The experiment would be packaged in the EXPRESS hardware, taken to orbit by the Shuttle and quickly hooked up to Freedom's power, thermal and data services," says Uhran. The payloads then can be activated and operated from the ground or by an astronaut crew aboard Freedom.

The EXPRESS project will reduce the time it takes to integrate a payload on the space station by:

- o standardizing connections between the EXPRESS hardware and the international racks,
- o defining performance envelopes for mid-deck and drawer-type payloads,
- o allowing payload-to-rack interface checks as an option in place of detailed payload verification planning,
- o using "off-the-shelf" hardware or equipment already in use in the Shuttle program, such as the mid-deck lockers and by
- o reducing paperwork through use of electronic databases to maintain all payload requirements

Next year, the EXPRESS project will fund the design of a series of structural components and utility distribution kits. These kits will provide the electrical, thermal, data and other service hookups to the international rack. A demonstration unit will be available in late 1993.

Development of the EXPRESS payload rack will be led by the Marshall Space Flight Center Payload Projects Office. Support will be provided by the Johnson and Kennedy centers. The development team will include representatives from all U.S. payload sponsoring organizations and is open to the international partners.

Further information can be obtained from Mark Uhran, Manager, Payload Integration, Space Station Freedom Program Office, Reston, Va. 22091, telephone 703/487-7252.

-end-

NASA News

National Aeronautics and
Space Administration

Washington, D.C. 20546
AC 202 453-8400

ISY

For Release

Bill Livingstone
Headquarters, Washington, D.C.
(Phone: 202/453-1898)

October 30, 1992

RELEASE: 92-192

NASA AND EPA ADMINISTRATORS SIGN AGREEMENT

NASA Administrator Daniel Goldin and Environmental Protection Agency Administrator William K. Reilly today signed an agreement to broaden cooperation between the two agencies.

It addresses environmental research, pollution monitoring and other activities where the research capabilities of NASA can support EPA's mission to protect the environment.

"This agreement renews NASA's commitment to safeguard the planet on which we live and to employ its technical expertise and experience to help solve problems here on Earth," said Goldin.

EPA Administrator Reilly said, "I look forward to collaborating with NASA on environmental research and technology development. This agreement is going to bolster EPA's on-going efforts to monitor the health of our natural resources and the ecological systems that sustain us."

"EPA's Environmental Monitoring and Assessment Program, for example, will especially benefit from this agreement. Our scientists use satellite imaging to secure the data we need to evaluate environmental conditions and trends, the effects of pollution and other information critical to making better decision," Reilly added.

The agreement pledges each agency to share information and facilities. It enables the exchange of personnel and joint development of research plans and projects.

Subjects of likely cooperative activities include Earth and environmental science and measurements, pollution monitoring, global climate and environmental change, technology transfer, and aerodynamic and fuel efficiencies.

- more -

Agreement on specific cooperative activities will be detailed in the "Implementing Arrangements" authorized by the memorandum of understanding signed today.

The first implementing arrangement is being drafted by scientists of the two agencies. In conjunction with NASA's Mission to Planet Earth and EPA's Environmental Monitoring and Assessment Program, the two agencies will establish a Joint Technical Working Group to identify and recommend projects in Earth and environmental science and measurements. These projects could address global environmental monitoring.

- end -

NASA News

National Aeronautics and
Space Administration

Washington, D.C. 20546
AC 202 453-8400

ISY

For Release

Don Savage
Headquarters, Washington, D.C.
(Phone: 202/453-8400)

Debra Rahn
Headquarters, Washington, D.C.
(Phone: 202/358-1639)

October 30, 1992

RELEASE: 92-193

INTERNATIONAL STUDY OF EARTH'S MAGNETIC FIELD ANNOUNCED

Scientists from the United States, Japan, Russia and Europe are mounting a coordinated multi-mission effort in solar-terrestrial science over the next 4 years, the Inter-Agency Consultative Group for Space Science (IACG) announced at its meeting in Washington, D.C., Oct. 29-30, 1992.

The effort began with the launch of Japan's Geotail satellite in July 1992 and will continue with next year's planned launch of NASA's WIND spacecraft, Russia's 2-spacecraft Interball mission planned for launch in the fall of 1993 and the Cluster and the SOHO missions of the European Space Agency in 1995. In addition, NASA's Interplanetary Monitoring Platform and the Japanese AKEBONO spacecraft will provide important data.

"During the 1990's, an unprecedented set of interrelated solar-terrestrial science missions are being launched, offering a unique opportunity to enhance individual scientific return," said Dr. Lennard A. Fisk, NASA Associate Administrator for Space Science and Applications.

This international coordination will maximize the scientific return from this suite of missions to gain a greater understanding of the Earth's magnetosphere -- the magnetic field that forms a magnetic "cocoon" around the Earth. Electrical and magnetic interactions involving the magnetosphere, the solar wind and interplanetary shock waves, have caused storms there which can create disturbances in the Earth's atmosphere affecting communications, electrical power systems and spacecraft electronics.

- more -

The effort will study not only quiet electrical and magnetic conditions but also study the major impacts on the magnetospheric tail from changes in the solar wind, such as interplanetary shock waves, large pressure pulses and changes in the interplanetary magnetic field.

Other severe tail instabilities generated within the magnetosphere itself. These include the storage and violent release of energy known as storms and sub-storms and processes of energy transfer between near-Earth and distant-tail regions.

New Methods of Multi-Mission International Cooperation

Prof. Atsuhiro Nishida, the IACG Executive Secretary, speaking on behalf of the Heads of Delegation said, "Toward the end of the decade, the four space agencies will look back on major science accomplishments, not possible through individual missions alone, that we will have achieved through new methods of multi-mission international cooperation. This effort could serve as a model for future international collaboration."

The Heads of Delegations to the IACG approved this coordinated multi-mission effort which, in the 1990's, will involve up to 35 spacecraft in as many as 25 common scientific projects in solar-terrestrial physics.

Leading the IACG Delegations were Dr. Fisk; Dr. Roger Bonnet, Director of the Scientific Programs at the European Space Agency; Prof. Ryojiro Akiba, Director of Japan's Institute of Space and Astronautical Sciences and Academician Albert A. Galeev, Director of the Space Research Institute in Russia.

- end -

NASA News

National Aeronautics and
Space Administration

Washington, D.C. 20546
AC 202 453-8400

ISY

For Release

Bill Livingstone
Headquarters, Washington, D.C.
(Phone: 202/453-1898)

November 3, 1992

RELEASE: 92-194

PELLERIN, DAILEY AND THOMAS TO FILL TOP POSITIONS AT NASA

NASA Administrator Daniel S. Goldin today announced the appointment of Dr. Charles Pellerin as Associate Deputy Administrator for Strategic Planning, John R. Dailey as Associate Deputy Administrator and Ralph C. Thomas as Assistant Administrator for Small and Disadvantaged Business Utilization.

Dailey and Thomas were selected after a nation-wide search and review.

Charles Pellerin

Pellerin, who has been with NASA for some 25 years, most recently was Deputy Associate Administrator for Safety and Mission Quality.

"Dr. Pellerin has a broad knowledge of NASA and will be responsible for creating a strategic plan to implement the agency's vision, mission and values," Goldin said. "He also will direct and oversee key elements of the strategic plan."

Pellerin first came to NASA Headquarters in 1975 to assist in the planning for Shuttle utilization. He later managed the integration of payloads for the Space Shuttle. And in 1982, he moved to the Astrophysics Division, where he helped initiate a series of astrophysics telescopes called the "Great Observatories."

He began his career at the Goddard Space Flight Center, Greenbelt, Md., as an aerospace engineer. There, he developed and patented a magnetomoter that has been used in sounding rockets and commercially at airports.

Pellerin has a Ph.D. in physics from Catholic University, Washington, D.C., and a B.S. in physics from Drexel University in Philadelphia.

- more -

Jack Dailey

Jack Dailey will plan, direct and manage the institutional operations required to accomplish NASA's roles and missions. He comes to NASA from the Marine Corps, having retired in September 1992, from the position of Assistant Commandant.

"Jack Dailey brings a remarkable background in system acquisition, strategic planning, total quality management and experience in the operation of government at its highest levels," Goldin said.

Dailey graduated from the University of California at Los Angeles in 1956, afterwards entering the Marine Corps as a pilot. In 1975, he returned to school, graduating from the National War College.

Dailey served as President of the Armed Forces Staff College from 1987-89, which is part of the National Defense University. He also held senior positions in research, development and acquisition before assuming the duties of Assistant Commandant of the Marine Corps in August 1990.

Ralph Thomas

Thomas, who has been the Executive Director of the National Association of Minority Contractors since August 1985, will become the first Assistant Administrator for Small and Disadvantaged Business Utilization -- a division recently elevated in stature to ensure NASA reflects the full diversity of America.

"Ralph Thomas will spearhead a determined effort to see that small and minority-owned businesses play a significant role in America's civil space and aeronautics programs," Goldin said.

Thomas graduated with honors from the University of California, Berkeley, in June 1975. He received a law degree from Harvard Law School in June 1978. After working in a law firm for 2 years, Thomas became an instructor in clinical law at George Washington University National Law Center in Washington, D.C.

In elevating the position, Goldin has emphasized these major goals:

o Establish a NASA Minority Business Resource Advisory Committee to help identify more businesses that should be part of the NASA family;

o Establish firm percentages for small and disadvantaged business subcontracting as part of prime contracts;

o Make use of small and disadvantaged business subcontracting as an important evaluation factor in every source selection and;

o Reward prime contractors with special award fees when they exceed their subcontracting goals by certain percentages.

- end -

Michael Braukus
Headquarters, Washington, D.C.
(Phone: 202/358-1547)

November 4, 1992

Mitch Varnes
Kennedy Space Center, Fla.
(Phone: 407/867-2468)

Robert MacMillin
Jet Propulsion Laboratory, Pasadena, Calif.
(Phone: 818/354-5011)

Maj. Mike Doble
Department of Defense, Pentagon
(Phone: 703/693-1778)

EDITORS NOTE: N92-93

NASA RESCHEDULES LAUNCH OF DEFENSE SATELLITE MSTI

NASA has rescheduled the launch of a Scout rocket from Space Complex 5 at Vandenberg Air Force Base, Calif., for Thursday, Nov. 5, carrying a Department of Defense payload called Miniature Seeker Technology Integration (MSTI).

The launch window opens at 8:42 a.m. EST and extends until 9:42 a.m. The launch will be carried live on NASA Select TV. The broadcast also may be monitored on the V-circuits. This system can be reached by calling 407/867-1260.

The launch of Scout/MSTI had been scheduled for last week but was postponed because of range control problems.

The Scout/MSTI News Center at Vandenberg Air Force Base will be located in Building 840, the NASA Administrative Headquarters. The center can be reached by calling 805/734-8232, ext. 53820.

- end -

NASA News

National Aeronautics and
Space Administration

Washington, D.C. 20546
AC 202 453-8400

ISY

Mark Hess
Headquarters, Washington, D.C.
(Phone: 202/453-8536)

Barbara Schwartz
Johnson Space Center, Houston
(Phone: 713/483-5111)

For Release
November 5, 1992

N92-94

EDITORS NOTE: PHOTO OPPORTUNITY WITH COSMONAUTS

Russian cosmonauts Sergei Krikalev and Vladimir Titov will be available for a photo opportunity at NASA Johnson Space Center, Houston, Tuesday, Nov. 10, at 9 a.m. EST, in Building 9A adjacent to the Shuttle trainer.

Donald R. Puddy, JSC's Special Assistant for Joint U.S./Russian Federation Programs, and the Space Shuttle mission STS-60 Pilot Kenneth S. Reightler, Jr., will introduce the cosmonauts, who will make brief statements.

News media are invited to attend and should be badged in Building 2, Room 136 before going to Building 9.

The cosmonauts will begin an intensive 3-month training program in preparation for STS-60 mission specific training and will not be available for other media activities until the initial training period is complete.

- end -

NASA News

National Aeronautics and
Space Administration

Washington, D.C. 20546
AC 202 453-8400

ISY

Michael Braukus
Headquarters, Washington, D.C.
(Phone: 202/358-1547)

Mitch Varnes
Kennedy Space Center, Fla.
(Phone: 407/867-2468)

Robert MacMillin
Jet Propulsion Laboratory, Pasadena, Calif.
(Phone: 818/354-5011)

Maj. Mike Doble
Department of Defense, Pentagon
(Phone: 703/693-1778)

For Release

November 5, 1992

EDITORS NOTE: N92-95

MSTI DEFENSE SATELLITE LAUNCH RESCHEDULED

NASA has rescheduled the Nov. 5 launch of a Scout rocket from Space Complex 5 at Vandenberg Air Force Base, Calif., for Saturday, Nov. 7,carrying a Department of Defense payload called Miniature Seeker Technology Integration (MSTI).

Problems with ground support equipment forced the cancelation of today's Scout/MSTI launch attempt. The launch originally had been scheduled for last week but was postponed because of range control problems.

Saturday's launch window opens at 8:42 a.m. EST and extends until 9:42 a.m. The launch will be carried live on NASA Select TV. The broadcast also may be monitored on the V-circuits. This system can be reached by calling 407/867-1260.

The Scout/MSTI News Center at Vandenberg Air Force Base will be located in Building 840, the NASA Administrative Headquarters. The center can be reached by calling 805/734-8232, ext. 53820.

- end -

NASA News

National Aeronautics and
Space Administration

Washington, D.C. 20546
AC 202 453-8400

ISY

For Release

Drucella Andersen
Headquarters, Washington, D.C.
(Phone: 202/453-8613)

November 5, 1992

Mary Ann Peto
Lewis Research Center, Cleveland
(Phone: 216/433-2902)

RELEASE: 92-195

NASA CLUSTERS COMPUTERS TO SOLVE "GRAND CHALLENGES"

An array of powerful, interconnected computers will help NASA solve some of the complex problems associated with designing aircraft propulsion systems.

The Lewis Advanced Cluster Environment (LACE) system at NASA's Lewis Research Center, Cleveland, is a network of 33 IBM RISC/6000, stand-alone computer workstations that can be set up for both distributed and parallel computing. LACE can perform up to 1 billion floating point operations per second and has 3 billion bytes of memory, making it the world's most powerful IBM workstation cluster.

"This is the first system of its kind for NASA," said Karen Pischel, LACE Project Manager at Lewis. "By applying the power of a network of high-performance computers, we are creating new, more efficient and more economical ways to perform computational research."

LACE is a test facility for NASA's role in the multi-agency High Performance Computing and Communications program. This high-priority national effort fosters the development of advanced computing techniques by tackling "grand challenges" that eventually will require one trillion floating point operations per second.

- more -

One of the program's grand challenges involves the complete simulation of a supersonic aircraft in flight. In a key LACE project, researchers are modeling the performance of a supersonic throughflow fan engine -- an engine in which the airflow remains supersonic throughout -- by distributing the various engine components among the LACE computers.

-end-

EDITORS NOTE: Photos are available to illustrate this release by calling 202/453-8375.

Color:	92-HC-682	B&W:	92-H-739
	92-HC-683		92-H-740

NASA News

National Aeronautics and
Space Administration

Washington, D.C. 20546
AC 202 453-8400

ISY

Mark Hess
Headquarters, Washington, D.C.
(Phone: 202/453-4164)

Jerry Berg
Marshall Space Flight Center, Huntsville, Ala.
(Phone: 205/544-0034)

For Release
November 6, 1992

RELEASE: 92-196

REPORT DETAILS CAUSES OF TETHERED SATELLITE MALFUNCTIONS

The report of NASA's Tethered Satellite System Investigative Board was released today, presenting the panel's findings on problems which prevented full deployment of the satellite during Space Shuttle mission STS-46.

The 47-page report examined five problems that occurred during the deployment effort and identified causes for four of them. It made recommendations for actions to be taken to prevent similar occurrences in the future.

The board said the two snags during deployment and retrieval -- when first releasing the satellite from the deployer and when the satellite was at 735 feet -- were due to slack which developed in the tether at a point where it moves between one pulley and another -- somewhat similar to movie film misfeeding in a projector.

"The crew found a way to procedurally get around this slack problem," said Board Chairman Darrell Branscome. "In both cases the jamming was overcome. By itself, this problem would not have prevented us from fully deploying the satellite."

NASA previously had reported on Aug. 28 that the cause of the unplanned stops at 587 and 840 feet was a mechanical obstruction -- a protruding bolt -- which prevented part of the tether reel mechanism from moving across its full range of travel.

"We contacted the bolt when the satellite was out at 587 feet," said Branscome. "What we learned from our ground simulations was that in spite of the bolt obstruction, it was possible to pull additional tether off the reel, out to 840 feet."

- more -

According to the report, the bolt was part of a hardware change made late in the review process and should have been caught in the systems engineering review.

"The board made some excellent recommendations in the report on how to deal with things like late changes to the hardware," said Pearson. "We are going to look carefully at their recommendations and apply the lessons learned from this flight to future missions."

No plausible scenario has been validated by post-flight demonstration regarding difficulty in retracting one of two umbilicals between the tethered satellite and deployer.

Based on its findings, the board recommended several specific hardware assessments and modifications which should be made to other elements of the tethered system if NASA decides to refly it.

The board was formed on Aug. 12 by Jeremiah Pearson, NASA Associate Administrator for Space Flight. The six-member board included representatives from various NASA centers and the Italian Space Agency.

- end -

EDITORS NOTE: Copies of the report are available to the media by contacting the NASA Headquarters Newsroom on 202/453-8400 or the Marshall Space Flight Center Newsroom on 205/544-0034.

NASA News

National Aeronautics and
Space Administration

Washington, D.C. 20546
AC 202 453-8400

ISY

Mark Hess
Headquarters, Washington, D.C.
(Phone: 202/453-4164)

For Release
November 6, 1992

RELEASE: 92-197

DON'T FORFEIT SATELLITE RESCUE ABILITY, COVERT GROUP REPORTS

A task group, looking into issues concerning future satellite rescue and repair, says NASA should continue to perform such missions, but only when they "produce genuine benefits to U.S. interests in view of the inherent risks to the Shuttle and its crew."

"The unique ability to accomplish satellite rescue and repair should not be forfeited," said task force Chairman Dr. Eugene E. Covert. "But these missions pose inherent risks to the Shuttle and should be undertaken only when the benefits outweigh the risks." Covert added the authority to employ this capability should rest solely with the NASA Administrator.

The NASA Advisory Council Group Task Force was established at the direction of NASA Administrator Daniel Goldin. Chairman Covert is a professor of Aeronautics and Astronautics at Massachusetts Institute Of Technology. Vice Chairman was former astronaut Lt. Gen. Thomas Stafford, USAF (ret).

The charter of the group was to recommend "a policy outlining the criteria, the design standards and the pricing model to guide NASA in assessing the responsibilities for government and non-government satellite rescue and repair missions."

Conclusions and Recommendations

While pointing out that opportunities for performing unanticipated satellite rescue or repair missions in the future are likely to be rare, the report says the unique ability to accomplish such missions should not be forfeited.

"We estimated that only 1 percent of the total satellites to be launched in the next few years will be candidates for rescue and repair," said Covert.

- more -

And while the trend for scientific satellites is for smaller satellites that do not require on-orbit maintenance, the group did say the Shuttle should continue to support those science payloads designed to be serviced, such as the Hubble Space Telescope.

"Flexible" Approach to Pricing

The report notes that if NASA charged customers the full cost of a Shuttle mission, the economic benefit to the manufacturer, the owner or the insurer "would be greatly diminished."

The report urges NASA to keep its satellite rescue pricing policy broad enough to accommodate U.S. government agencies and commercial enterprises as well as international government and commercial clients. Covert said the group recommends a pricing approach that would vary depending upon the customer for the mission.

The task force recommends that non-NASA U.S. government customers pay marginal costs which NASA defines as the cost of adding or deleting one mission from the manifest.

Reimbursable customers (commercial and international) should pay the marginal cost for the mission as well as any costs up front which are unique to that mission.

"In addition to the marginal and unique costs, we recommend that if the mission is a success, NASA should receive a negotiated portion of the revenues until the full cost of the rescue is paid," Covert said. The government should not charge customers for Shuttle replacement, NASA facilities or facilities amortization costs.

If the rescue provides significant benefit to NASA or the U.S. government, Covert said the task force recommended consideration be given to sharing costs with the customer.

Safety Remains Top Priority

The task force said NASA should continue to ensure that safety requirements are met for all satellite rescue and repair missions.

"We note in the report the Intelsat rescue mission did not have a mission manager," Covert said. "We recommend a mission manager be named as soon as NASA has accepted a mission, and this person should be responsible for all aspects of preflight mission execution."

The report also recommends added emphasis on training and the upgrade of EVA (extravehicular activity) including use of state of the art EVA tools and training methods.

It also calls for the maximum use of individuals with previous experience, both internal and external to NASA, to help ensure mission safety and success.

Should Stress Risks

Covert said one of the most important findings that came out of the study was the risks of performing these types of missions. Noting that rescue missions on land or at sea are not always successful, the committee recommended NASA remind the public of the risks associated with rescue missions.

"There may be times in the future when NASA is not successful in rescuing and repairing a satellite. That does not mean the total, overall Shuttle flight was a failure," he said.

Covert said the extensive planning and training that must be done to prepare for and carry out a complex mission such as a satellite rescue and repair can possibly provide valuable information that will benefit space operations in the future.

"But the most valuable experience and information is gained from disciplined execution of carefully planned experiments," he said.

-end-

Editors Note: Copies of the report are available to the media for pickup in the NASA Headquarters Newsroom, 400 Md. Ave., S.W., Washington, D.C., or by calling 202/453-8400.

NASA News

National Aeronautics and
Space Administration

Washington, D.C. 20546
AC 202 453-8400

ISY

For Release

Paula Cleggett-Haleim
Headquarters, Washington, D.C.
(Phone: 202/358-1547)

November 6, 1992

Jim Doyle
Jet Propulsion Laboratory, Pasadena, Calif.
(Phone: 818/354-5011)

RELEASE: 92-198

VIKING PHOTOS SHOW MARS MAY EXPERIENCE FREQUENT QUAKES

Mars was once very active tectonically and may still be shaken by quakes daily, according to scientists using NASA's Viking Orbiter photos of the red planet's surface.

In a science paper published today, Drs. Matthew Golombek, W. Bruce Banerdt and David M. Tralli of the Jet Propulsion Laboratory and Dr. Kenneth L. Tanaka of the U.S. Geological Survey said Mars is more seismically active than the moon, but less so than Earth.

"Because Mars is smaller than Earth, little more than half the size, a magnitude 6 quake on Mars would have 10 times the effect it would on Earth," Golombek said.

Marsquakes of that magnitude may occur about once every 4 and a half years, he said. A marsquake of about magnitude 4, however, might happen somewhere on the planet once a month on an average. Yet, a quake of magnitude 4 would be detectable throughout the planet, again because of its size and presumed structure.

Tectonic features on Mars are found mostly around the Tharsis region, a large volcanic plateau with associated features that cover the entire western hemisphere of the planet.

Tectonism in that region occurred mainly during two periods in the planet's history -- the earliest possibly as long ago as 4-billion years and the most recent ending possibly less than one-billion years ago.

- more -

Features that formed during the first seismic period include many narrow graben or long ditch-like or trough features with faults along their sides. Also formed at that time was a system of concentric wrinkle ridges, larger graben and rifts, and the deep rift valleys of Mars' great 1,860-mile-long (3,000-kilometer) canyon, the Valles Marineris.

During the second period, tectonism caused an enormous set of radial grabens that extend up to thousands of kilometers from the center of the plateau and rift zones of Valles Marineris, along with other prominent features.

Tectonism and seismic activity have decreased from the earlier period to the present, Golombek said, as would be expected if the seismic activity is governed by simple cooling of the lithosphere -- the rigid outer crust and upper part of the mantle -- of the planet.

The scientists said that while Mars is less seismically active than Earth, their studies predict that about two marsquakes of magnitude 5 or greater occur per year, about a hundred quakes of magnitude 3 or greater occur per year.

"That is a promising prospect for seismological investigations on future missions to Mars," Golombek said.

Golombek is the Project Scientist for the Mars Environmental Survey (MESUR) project which would place a network of landers, each with a seismometer, in different locations on the Martian surface. Recordings of marsquakes by seismometers at different locations will help determine the internal structure of the red planet.

The network of instrumented landers is planned to be deployed over three Mars launch opportunities. Four would be sent in 1999, four more in 2001 and the final eight launched with four each on two launch vehicles in 2003.

A precursor mission called MESUR Pathfinder is under study as part of NASA's proposed Discovery Program of small, low-cost planetary missions. MESUR Pathfinder would place a single lander on Mars with a robotic rover deploying, among other instruments, a seismometer as early as 1996.

The paper, published today in Science magazine, is entitled "A Prediction of Mars Seismicity from Surface Faulting."

The Discovery Program and the Viking mission are managed by NASA's Office of Space Science and Applications, NASA Headquarters, Washington, D.C.

- end -

NASA News

National Aeronautics and
Space Administration

Washington, D.C. 20546
AC 202 453-8400

ISY

For Release

Michael Braukus
Headquarters, Washington, D.C.
(Phone: 202/358-1547)

November 9, 1992

Mitch Varnes
Kennedy Space Center, Fla.
(Phone: 407/867-2468)

Robert MacMillin
Jet Propulsion Laboratory, Pasadena, Calif.
(Phone: 818/354-5011)

Maj. Mike Doble
Department of Defense, Pentagon
(Phone: 703/693-1778)

LAUNCH ADVISORY

SCOUT LAUNCH RESCHEDULED FOR TUESDAY, NOVEMBER 10

A mechanical problem with an aircraft, needed to monitor telemetry data, forced NASA to reschedule Sunday's launch of a Scout rocket from Space Complex 5 at Vandenberg Air Force Base, Calif., for Tuesday, Nov. 10, carrying a Department of Defense payload called Miniature Seeker Technology Integration (MSTI).

This is the sixth launch attempt for the Scout/MSTI vehicle. Previous launch attempts have been hampered by range control, power supply and ground support equipment problems.

Tuesday's launch window opens at 8:43 a.m. EST and extends until 9:43 a.m. The launch will be carried live on NASA Select TV. The broadcast also may be monitored on the V-circuits. This system can be reached by calling 407/867-1260.

The Scout/MSTI News Center at Vandenberg Air Force Base is located in Building 840, the NASA Administrative Headquarters. The News Center can be reached by calling 805/734-8232, ext. 53820.

- end -

NASA News

National Aeronautics and
Space Administration

Washington, D.C. 20546
AC 202 453-8400

ISY

For Release

Mark Hess
Headquarters, Washington, D.C.
(Phone: 202/453-8536)

Barbara Schwartz
Johnson Space Center, Houston
(Phone: 713/483-5111)

November 9, 1992

EDITORS NOTE: N92-96

STS-52 CREW POSTFLIGHT PRESS CONFERENCE SET FOR NOV. 12

The STS-52 crew postflight press conference will be held Thursday, Nov. 12, at 10 a.m. EST, at the Johnson Space Center, Houston, in Building 2, Room 135.

The crew members will narrate film highlights of their mission to deploy the LAGEOS-2 satellite and to perform numerous scientific experiments. Canadian payload specialist Steven G. MacLean will talk about the Canadian Experiment-2, and the astronauts will discuss the United States Microgravity Payload-1.

The briefings will be carried on NASA Select television with two-way audio for questions from NASA Headquarters and other centers. NASA Select programming is carried on SATCOM F2R, transponder 13, located at 72 degrees west longitude.

-end-

NASA News

National Aeronautics and
Space Administration

Washington, D.C. 20546
AC 202 453-8400

ISY

For Release

Barbara E. Selby
Headquarters, Washington, D.C.
(Phone: 703/358-1983)

November 9, 1992

RELEASE: 92-199

TECHNOLOGY 2002 WILL SPOTLIGHT NATIONAL CRITICAL TECHNOLOGIES

This December, the nation's top technology managers will gather in Baltimore to explore a gold mine of innovative ideas that can be used to solve engineering problems, create new products and help U.S. industry use cutting-edge technology to gain a competitive edge in the global marketplace.

TECHNOLOGY 2002, the third national technology transfer conference and exposition, will take place Dec. 1-3, at the Baltimore Convention Center in Baltimore. The event, sponsored by NASA, "NASA Tech Briefs" magazine and the Technology Utilization Foundation, will spotlight leading-edge technologies from NASA and other federal agencies which U.S. industry can use to develop new or improved products and processes.

"A wealth of technology is available from within NASA and other federal research and development agencies," said Daniel S. Goldin, NASA Administrator. "TECHNOLOGY 2002 is a premier forum for promoting the transfer of this technology to non-aerospace businesses."

Keynote speakers for the conference are Maryland Senator Barbara Mikulski (opening session on Dec. 1) and Sam F. Iacobellis, Executive Vice President and Chief Operating Officer, Rockwell International (Dec. 2). Other participants will include speakers from NASA, the National Oceanic and Atmospheric Administration, the Environmental Protection Agency, and the Departments of Agriculture, Commerce, Defense, Energy, Health and Human Services, Interior, Transportation and Veterans Affairs.

TECHNOLOGY 2002 will feature more than 120 presentations highlighting inventions with commercial promise in areas identified as national critical technologies, such as manufacturing, advanced materials, computing, communications, microelectronics, biotechnology, energy and the environment.

- more -

Additionally, special hands-on workshops will address the "ins and outs" of patent licensing, cooperative research and development and Small Business Innovation Research grants.

Since its inception 3 years ago, the symposium has more than tripled in size and participation. Some 6,000 engineers and business managers across U.S. industry are expected to attend TECHNOLOGY 2002, which will showcase over 60,000 square feet of exhibits from all nine NASA field centers, other government agencies, universities, government research centers and a diverse array of high-tech companies.

TECHNOLOGY 2002 will open National Technology Transfer Week, Nov. 30 through Dec. 5, 1992. Two other technology transfer conferences -- the President's National Technology Initiative (NTI) and the MIT Entrepreneurial Technology Transfer Conference -- are planned during the week. The NTI will be held concurrently with TECHNOLOGY 2002's Dec. 1 sessions at the Baltimore Convention Center. The MIT conference will take place on Dec. 3-5 at the Baltimore Hyatt Regency Hotel.

The NTI will focus on opportunities for partnerships between government, academia and U.S. companies to translate new technologies into marketable goods and services. Top-level officials from the Departments of Commerce, Energy, Transportation, NASA and other federal agencies will discuss three critical elements for U.S. competitiveness -- technology, capital and manufacturing.

The MIT Conference, sponsored by the Massachusetts Institute of Technology Enterprise Forum, is designed to provide the skills and tools needed to commercialize emerging technologies and capitalize on partnership opportunities such as those featured at TECHNOLOGY 2002 and the NTI. In more than 25 "how to" sessions and interactive tutorials, leading entrepreneurs, technology licensing officers, research managers and investors will help attendees formulate technology transfer strategies and techniques.

- end -

EDITORS NOTE: News media may attend TECHNOLOGY 2002 and the National Technology Initiative free of charge and are invited to the pre-show reception on Monday, Nov. 30.

To pre-register, affix a business card or copy of your media identification to the attached form and mail or FAX by Nov. 20 to Technology Utilization Foundation, 41 East 42nd Street - Suite 921, New York, N.Y., 10017, or FAX to 212/986-7864.

For general inquiries about Technology 2002 and the NTI, call 800/944-NASA. For more information on the MIT conference, call 617/862-0397.

MEDIA PRE-REGISTRATION FORM

TECHNOLOGY 2002/National Technology Initiative
December 1-3, 1992
Baltimore Convention Center
Baltimore, Md.

Please print or type:

NAME: _____

TITLE: _____

AFFILIATION: _____

ADDRESS: _____

CITY/STATE/ZIP CODE: _____

POSTAL CODE: _____

COUNTRY: _____

TELEPHONE: _____

I plan to attend the conference on:

_____ Tuesday, December 1
_____ Wednesday, December 2
_____ Thursday, December 3
_____ I also plan to attend the opening reception on Monday, November 30 (6:00-8:00 p.m.).

MAIL OR FAX TO:

Technology Utilization Foundation
41 East 42nd Street - Suite 921
New York, N.Y. 10017

FAX 212/986-7864

NASA News

National Aeronautics and
Space Administration

Washington, D.C. 20546
AC 202 453-8400

ISY

For Release

Paula Cleggett-Haleim
Headquarters, Washington, D.C.
(Phone: 202/358-1547)

November 10, 1992

Mike Fluharty
National Science Foundation, Washington, D.C
(Phone: 202/357-9498)

RELEASE: 92-200

FIRST STEPS TO MARS TAKEN BY SIMULATION IN ANTARCTICA

Scientists from NASA and the National Science Foundation (NSF) are taking the first steps to Mars this winter in the most unearthly place on the planet -- Antarctica.

NASA and NSF researchers are conducting several unique science and technology projects developed under a joint effort called the Antarctic Space Analog Program. The program uses the harsh, frigid conditions of the Antarctic continent to test technology and techniques for future missions to the moon and Mars.

"Our current work stresses exploration by robots and tests of the equipment needed to support humans in a remote environment. We're also studying how humans interact with those technologies," said Dr. John D. Rummel, NASA Program Committee Co-Chairperson.

"The U.S. Antarctic Program, under NSF management, is interested in testing NASA-developed technologies, such as telescience, which could help reduce the number of people who run our scientific experiments," said Dr. Carol A. Roberts, NSF Program Committee Co-Chairperson.

"Also," she continued, "we are very much interested in preserving the pristine Antarctic environment through improved waste processing and energy production technologies."

The Antarctic, known for its physical challenges, isolation and rugged terrain, is an excellent place to evaluate exploration technologies and human factor questions because scientists live and work under conditions similar to those that planetary explorers will encounter.

- more -

"Telepresence" and Power

From October through December, researchers are studying a permanently frozen Antarctic lake using "telepresence" technology developed at NASA's Ames Research Center, Mountain View, Calif. Telepresence lets an operator, wearing a video headset, see through cameras on a remotely-controlled robot. The researcher's head movements direct the camera's movements.

In the project, a remotely operated "rover", connected to the surface by a cable, will descend into Lake Hoare to study the lake's life forms. The goal is to demonstrate the scientific use of telepresence while gaining further insight into the Mars environment that may have existed several billion years ago.

The scientists' field camp is supported by an advanced solar power system that can be deployed easily in remote field locations. NASA's Lewis Research Center, Cleveland, developed the system.

The NASA Office of Space Science and Applications and Office of Advanced Concepts and Technology and NSF's Division of Polar Programs jointly sponsor the expedition.

"Dante" to Descend into Volcanic "Inferno"

Later this season, NASA plans to send an eight-legged robot into the crater of Antarctica's Mount Erebus, the world's only easily-reached volcano with a permanent lava lake. The rover, appropriately dubbed "Dante," will photograph the crater, measure the temperature of the lava lake and sample the gases it releases.

The Erebus project will test technology for future robotic explorers that could cross the rugged Martian landscape. It also will collect science data to help understand Earth's environment, since some scientists think that gases from volcanic eruptions may play a role in depleting Earth's ozone layer.

Carnegie Mellon University, Pittsburgh, built Dante under a $2 million NASA grant.

Fresh Food for Future Explorers

In another experiment, the NASA/NSF researchers are trying to produce fresh food and to a significant extent, recover water under controlled conditions at the South Pole.

The Closed Ecological Life Support System Antarctic Analog Project addresses crop productivity, the effect of fresh food on humans' well-being and how the integrated system performs. Scientists believe that having fresh food during the long South Polar winter will be good for their physical and psychological well-being -- benefits that would apply to long-duration human space missions as well.

The project's waste management system also will reduce the impact of humans on the pristine polar environment. In January, scientists will travel to the South Pole to evaluate the site and to analyze waste materials that will be recycled by the system.

The program is managed by the Advanced Life Support Division at NASA's Ames Research Center and is co-sponsored by Ames' Life Sciences Division and the NSF Division of Polar Programs.

- end -

NASA News

National Aeronautics and
Space Administration

Washington, D.C. 20546
AC 202 453-8400

ISY

For Release

Bill Livingstone
Headquarters, Washington, D.C.
(Phone: 202/453-1898)

November 12, 1992

RELEASE: 92-202

GOLDIN ANNOUNCES PERSONNEL ACTIONS AT HEADQUARTERS

NASA Administrator Daniel S. Goldin today announced that Paul F. Holloway, in addition to his responsibilities as Director of Langley Research Center (LaRC), Hampton, Va., temporarily will be assigned to NASA Headquarters as a special assistant to the Administrator.

"Paul has a distinguished record of service with NASA and has provided unparalleled leadership at Langley. I'm very pleased to announce his new position as special assistant at Headquarters, where he will be intimately involved with the day-to-day operations of the agency," said Goldin.

Holloway was appointed Director of LaRC in October 1991, where he was responsible for the Center's aeronautical and space research programs, as well as facilities and administration of the center's 3,000 civil service employees. Prior to his appointment as Director, he was Deputy Director of Langley since 1985.

He joined the Langley staff in 1960 as an aerospace research engineer and served in various positions including Chief, Space Systems Div. and Director for Space. His research work has been in hypersonic aerodynamics, boundary layer transition and flow separation, analysis of entry flight mechanisms and Earth orbital and planetary space missions.

He earned a bachelor's of science degree in aeronautical engineering from Virginia Polytechnic Institute in 1960 and did graduate study in physics at the College of William and Mary. He is a Fellow of the American Institute of Aeronautics and Astronautics and the American Aeronautical Society.

Assistant Administrator for Procurement

Goldin also announced today that Don G. Bush, Assistant Administrator for Procurement, would be leaving the agency on Jan. 11, 1993. Bush, who joined the agency in 1990 after numerous assignments in the Defense Department, plans to pursue opportunities in the private sector.

- more -

"Don has done an outstanding job as the Assistant Administrator for Procurement, forging ahead NASA's procurement reform program that began about 18 months ago. Clearly the agency will miss him," said Goldin.

"My association with the procurement professionals at NASA has been a very rewarding experience," said Bush. "I will miss being with them for the exciting times as many of my favorite procurement initiatives come to fruition. But, there comes a time when one must move on to other interests."

Prior to his appointment as NASA Assistant Administrator for Procurement, Bush held positions as Special Assistant and the Deputy Assistant Administrator for Procurement.

Before joining NASA, he served on active duty with the U.S. Air Force in all aspects of contracting and manufacturing operations, holding various procurement assignments within the Air Force Logistics Command (AFLC) and at AFLC Headquarters in base level procurement and central procurement policy. He served as an administrative contracting officer in Thailand and then as Head of Production for Defense Contract Administration Services for the state of Wisconsin.

After an assignment as Procuring Contracting Officer and Director of Subsystems in the A-10 Aircraft Systems Program Office, he returned to AFLC to head their major program/policy acquisition strategy office. He subsequently served in the Pentagon as Head of Major Weapon System Contract Policy and as Deputy Director of Contracting and Manufacturing Policy in the Office of the Assistant Secretary for Acquisition.

Bush earned a bachelor's of science degree in industrial engineering from the University of Kentucky and a master's of science degree in logistics management from the Air Force Institute of Technology.

-end-

NASA News

National Aeronautics and
Space Administration

Washington, D.C. 20546
AC 202 453-8400

ISY

For Release

David W. Garrett
Headquarters, Washington, D.C.
(Phone: 202/453-8400)

November 13, 1992

NOTE TO EDITORS: N92-97

NASA NEWS OPERATION MOVES TO NEW LOCATION

The NASA Headquarters Public Affairs Office will relocate to the new NASA Headquarters Building at 300 "E" Street S.W. between Dec. 3-7. This will necessitate some disruption of normal office functions.

The newsroom and Broadcast/Imaging telephone and facsimile facilities will be disconnected at noon on Thursday Dec. 3 and will be back in service at noon on Dec. 7. The new telephone number for the newsroom will be 202/358-1600. The new number for the Broadcast and Imaging branch will be 202/358-1900.

Those needing still photos or audio/video materials, normally acquired from the Broadcast and Imaging Branch, should place their requests with the Johnson Space Center, Houston, beginning Nov. 18 through mid-December. The telephone and facsimile numbers for Johnson are:

Still Photos:	Telephone	713/483-4231
	Fax	713/483-4876
Audio/Video:	Telephone	713/483-8643 or 8644
	Fax	713/483-4876

-end-

NASA News

National Aeronautics and
Space Administration

Washington, D.C. 20546
AC 202 453-8400

ISY

For Release

Paula Cleggett-Haleim
Headquarters, Washington, D.C.
(Phone: 202/358-0883)

November 13, 1992

Jim Eliott
Goddard Space Flight Center, Greenbelt, Md.
(Phone: 301/286-6256)

Ray Villard
Space Telescope Science Institute, Baltimore, Md.
(Phone: 410/338-4757)

RELEASE: 92-203

HUBBLE OBSERVES MOST DISTANT KNOWN GALAXY IN UNIVERSE

NASA's Hubble Space Telescope (HST) has revealed a chain of luminous knots in the core of the most distant known galaxy -- one that existed in the infancy of the universe and is located more than 10 billion light years from Earth.

"These knots could be giant clusters of stars. If that is so, then each knot would contain about 10 billion stars and would be about 1,500 light years across," said Dr. George Miley of Leiden University in the Netherlands and leader of the international astronomer team which examined the galaxy.

An alternative theory is that the knots are gas or dust clouds caught in a "searchlight" beam of energy from a massive black hole hidden at the galaxy's core.

The galaxy's great distance from Earth indicates that it was formed only 1 or 2 billion years after the Big Bang, which marked the beginning of the observable universe. Most galaxies probably formed during this early epoch.

The new photos, taken with the HST's wide field and planetary camera, reveal detail ten times better than photographs previously taken with ground-based telescopes.

- more -

The galaxy, designated 4C 41.17, also is known as a radio galaxy. Radio galaxies produce powerful, extended radio emissions. Several have been discovered by this international team in the past few years at great distances from the Earth.

In the case of 4C 41.17, astronomers presume that a massive black hole, rotating in the core of the galaxy, is producing twin jets of particles moving at enormous speed. The energy from the jets would be the source of the radio emissions.

The Hubble photographs are remarkably similar to images of the galaxy produced on the basis of the radio emissions, Miley said.

These corresponding images suggest that the high velocity particle jets compress gas and dust along their paths, triggering the formation of new stars. This would account for the elongated optical appearance of the galaxy.

If this explanation is accurate, the knots along the jet paths would be clusters of stars in "enormous numbers, the products of the highly disturbed inner region of the primeval galaxy," Miley said.

It also is possible, said Miley, that the light photographed by the HST is not due to stars along the jet paths, but rather is light from a disk of material surrounding the black hole which is being scattered off clouds of gas or dust.

An active galactic nucleus of this description is called a quasar. It is hidden from optical view by a thick dust shroud which allows light to escape only along the radio or jet axis.

Hubble can help discriminate between these possibilities by further studying the colors and other properties of these and similar objects. After the scheduled Space Shuttle servicing mission for Hubble in late 1993, HST then can be used to carry out detailed studies of many galaxies at distances comparable with 4C41.17.

"More than 50 are now known," said Miley, "observing them with the renewed Hubble would provide us with an important new window through which we can glimpse the early history of our universe."

The observations of galaxy 4C 41.17 were carried out by Miley and co-investigators Kenneth Chambers, of the University of Hawaii; Wil van Breugel of Lawrence Livermore National Laboratories of the University of California; and Duccio Macchetto of the Space Telescope Science Institute, Baltimore and the European Space Agency. The results will be published in the December 20 issue of Astrophysical Journal Letters.

This research was supported by the Netherlands Organization for the Advancement of Pure Research, the Space Telescope Science Institute, the European Space Agency, NASA, the European Economic Community, NATO and the U.S. Department of Energy.

The Hubble Space Telescope is a project of international cooperation between NASA and the European Space Agency.

- end -

Editors Notee: A photograph to illustrate this story is available to media representatives through NASA's Broadcast and Imaging Branch, (202/453-8375).

B&W
92-H-748

NASA News

National Aeronautics and
Space Administration

Washington, D.C. 20546
AC 202 453-8400

ISY

For Release

Barbara Selby
Headquarters, Washington, D.C.
(Phone: 202/358-1983)

November 13, 1992

RELEASE: 92-204

NASA SELECTS SMALL BUSINESS INNOVATION RESEARCH PROPOSALS

NASA announced today the selection of 321 research proposals for immediate negotiation of Phase I contracts under the agency's 1992 Small Business Innovation Research Program (SBIR).

The proposals were submitted by 238 small, high technology firms located in 34 states. A Phase I firm can receive up to $50,000 to establish the feasibility of its proposal. Successful firms may compete for Phase II further development contracts. About 50 percent of the projects make it.

SBIR objectives are to stimulate technological innovation in the United States by using small business, including minority and disadvantaged firms, to help meet Federal research and development needs and to encourage commercial applications of federally supported research innovations.

"The SBIR program re-authorization legislation reflects the conviction of the Congress and the Administration that the program has been highly successful in achieving its objectives", according to Harry Johnson, NASA's SBIR Program Director. He noted that the new legislation increases SBIR funding by 20 percent immediately and will double the size of the program by 1997.

"It will provide many more opportunities for small businesses to participate in federal R&D programs," Johnson added, noting that the new law also increases emphasis on commercialization of SBIR project results in the private sector.

These Phase 1 proposals were selected competitively from 2513 proposals received in response to the SBIR solicitation which closed July 21, 1992. Selections were made on the basis of scientific and technical merit, capabilities of the firm and value of the proposed research innovations to NASA.

- more -

This is the 10th year of the NASA SBIR program, which is conducted in accordance with Public Law 97-219, the Small Business Innovation Development Act of 1982 as amended last month by Public Law 102-564 re-authorizing the SBIR program until Oct. 1, 2000.

Phase I contracts are for 6 months. Phase II contracts normally do not exceed 2 years.

Subsequent SBIR Phase III activities may be directed toward commercial development of research results funded by the private sector, but also may include procurement or continued development for government use funded outside the SBIR program by NASA or other agencies.

As required by law, NASA will allocate 1.5 percent of its Fiscal Year 1993 research and development budget to support SBIR. This Phase I procurement will expend approximately $16 million.

The SBIR program is managed by NASA's newly formed Office of Advanced Concepts and Technology, NASA Headquarters, Washington, D.C. Individual SBIR projects are managed by 9 NASA field centers and Headquarters Offices.

- end -

EDITOR'S NOTE: A listing of companies selected for this program is available at NASA Headquarters Newsroom (Phone: 202/453-8400) and all NASA field centers.

NASA News

National Aeronautics and
Space Administration

Washington, D.C. 20546
AC 202 453-8400

ISY

Paula Cleggett-Haleim
Headquarters, Washington, D.C.
(Phone: 202/358-0883)

Jim Elliott
Goddard Space Flight Center, Greenbelt, Md.
(Phone: 301/286-6256)

For Release
November 16, 1992

NOTE TO EDITORS: N92-98

BRIEFING NOV. 19 ON HUBBLE IMAGE OF DISK AROUND POSSIBLE BLACK HOLE

Hubble Space Telescope's first image of a giant dust disk orbiting a suspected black hole will be the subject of a media briefing Thursday, Nov. 19, 1992, at 1:00 p.m. EST in the NASA auditorium, 400 Maryland Ave., S.W., Washington, D.C.

Dr. Walter Jaffe, of Leiden Observatory, The Netherlands, will present this recent finding and show an image clearly depicting the Frisbee-shaped disk. The image provides astronomers with the first clear view of the disk's bright hub, which presumably harbors a black hole.

The disk is at the core of galaxy NGC 4261, chosen because it is one of the dozen brightest galaxies in the Virgo Cluster, located 45 million light-years away.

A video featuring animation of the disk fueling the black hole will be available at the NASA Headquarters Broadcasting and Imaging Branch by calling 202/453-8383. Views of the galaxy's center using stills from ground-based observatories and Hubble also are on the video.

Host Dr. Stephen Maran, from NASA's Goddard Space Flight Center, Greenbelt, Md., will be joined by veteran panelists Dr. Bruce Margon, Professor of Astronomy and Chairman of the Department of Astronomy, University of Washington, Seattle, and Dr. Daniel Weedman, Professor of Astronomy at Pennsylvania State University, University Park.

The briefing will be carried live on NASA Select television, Satcom F-2R, Transponder 13, 72 degrees west longitude, frequency 3960.0 MHz, audio 6.8 MHz. Questions will be taken from NASA centers.

- end -

NASA News

National Aeronautics and
Space Administration

Washington, D.C. 20546
AC 202 453-8400

ISY

For Release

Drucella Andersen
Headquarters, Washington, D.C.
(Phone: 202/453-8613)

Paula Cleggett-Haleim
Headquarters, Washington, D.C.
(Phone: 202/358-0883)

Franklin O'Donnell
Jet Propulsion Laboratory, Pasadena, Calif.
(Phone: 818/354-5011)

November 16, 1992

RELEASE: 92-205

NASA, CRAY TO JOIN IN PARALLEL SUPERCOMPUTER RESEARCH

NASA is collaborating with Cray Research, Inc., Eagan, Minn., to conduct joint research and development activities using the company's most powerful supercomputer.

The partnership is a NASA response to the multi-agency High Performance Computing and Communications program, a bold national initiative to advance U.S. capabilities in supercomputing.

The computer will be located at NASA's Jet Propulsion Laboratory (JPL), Pasadena, Calif., with the California Institute of Technology, Pasadena, as a collaborator in the project.

"The Cray T3D system, together with our expertise in parallel processing, will allow us to tackle new computational problems in Earth and space sciences," said Dr. Carl Kukkonen, Supercomputing Project Manager at JPL.

"More importantly, we will be able to feed back JPL's and Caltech's experiences to Cray and thus, contribute to maintaining U.S. leadership in supercomputing," Kukkonen added.

- more -

"This collaboration will help us address the grand challenges of Earth and space sciences -- analyzing the enormous data sets from NASA's Earth and planetary missions," said Joseph Bredekamp of the Office of Space Science and Applications, NASA Headquarters. "We expect that 20 to 25 percent of our scientific computing will be performed on parallel computers within 3 years."

NASA Applications

JPL will use the new Cray T3D system for applications that require high-power computers -- turning planetary data from spacecraft into three-dimensional animations; electromagnetic simulations for the design of communications antennas; analyzing Earth satellite data; studying the dynamics of chemical reactions and the flow of space plasmas; and computational fluid dynamics.

"NASA is committed to being an early user of new parallel supercomputers, and Cray will be an important player," said Lee Holcomb, Director for the High Performance Computing and Communications program at NASA Headquarters.

In the fall of 1993, JPL will receive a Cray T3D system, the company's new "massively parallel" supercomputer. The innovative machine uses 256 processors to reach a peak speed of 38 billion floating point mathematical operations per second, making it Cray's most powerful computer. The effort involves JPL, Cray and the California Institute of Technology (Caltech), Pasadena.

Center Of Excellence

Cray has designated JPL/Caltech as one of four "Cray Centers of Excellence in Parallel Computing." Under this program, the company will locate staff engineers at JPL to carry out joint research in parallel computing techniques.

Cray President John Carlson said the company chose JPL as a site for its Center of Excellence program "because of the great expertise developed at JPL and the Caltech campus in parallel computation."

The project is funded by NASA's Office of Aeronautics and Office of Space Science and Applications, Washington, D.C.

-end-

NASA News

ISY

National Aeronautics and
Space Administration

Washington, D.C. 20546
AC 202 453-8400

Jim Cast
Headquarters, Washington, D.C.
(Phone: 202/453-8536)

For Release
November 17, 1992
4:00 p.m. EST

Jim Sahli/Dave Drachlis
Marshall Space Flight Center, Ala.
(Phone: 205/544-0034)

RELEASE: C92-19

NASA/MCDONNELL DOUGLAS COMPLETE SPACELAB CONTRACT NEGOTIATIONS

NASA and McDonnell Douglas have completed negotiation of a cost-plus-award-fee contract to provide continuation of Spacelab integration activities. The principal places of performance will be McDonnell Douglas' and major subcontractor facilities in the Huntsville, Ala., area and at NASA facilities at the Marshall Space Flight Center, Huntsville, and Kennedy Space Center, Fla.

The amount of the contract is $163 million with four 1-year options valued at $34.6 million, $29.7 million, $28.6 million and $27.3 million, respectively.

Spacelab integration activities include sustaining engineering to maintain the design, analysis and verification database for the Spacelab hardware and software systems; provide program support and control functions such as project managemen procurement, configuration control, safety, reliability and quality assurance engineering analyses and documentation for Spacelab missions; provide analyses and documentation to verify flight readiness; and support flight operations and post mission evaluation and anomaly resolution.

The Spacelab System was developed by the European Space Agency in cooperation with NASA. Carried in the payload bay of the Space Shuttle, Spacelab serves as a unique laboratory that converts the Shuttle into a versatile on-orbit research facility.

Much of the life and materials science research performed aboard Spacelab on-orbit can serve as a precursor to Space Station Freedom operations scheduled for later this decade.

The Marshall Space Flight Center has management responsibility for Spacelab and will manage the contract. The Spacelab operations program is under the direction of NASA Headquarters Spacelab/Space Station Utilization Program, Office of Space Flight, Washington, D.C.

- end -

NASA News

National Aeronautics and
Space Administration

Washington, D.C. 20546
AC 202 453-8400

ISY

Barbara Selby
Headquarters, Washington, D.C.
(Phone: 202/358-1983)

For Release
November 17, 1992

RELEASE: 92-206

ACTS CONFERENCE TO FOCUS ON COMMUNICATIONS TECHNOLOGY

The Advanced Communications Technology Satellite (ACTS) Conference '92 will focus on pioneering communications technology developments to provide better service, lower cost, greater convenience and improved reliability.

The Nov. 18-19 conference at the Sheraton Washington Hotel, Washington, D.C., is co-sponsored by NASA, Comsat Laboratories, Harris Corp. and the MITRE Corp.

"The ACTS Experiment Program continues NASA's long history of partnerships with industry in developing advanced technologies that create new markets and exciting commercial applications," said Richard dalBello of NASA's Office of Advanced Concepts and Technology, Washington, D.C.

ACTS was developed to support the future high-risk communications needs which fall outside the sponsorship capability of the private sector. ACTS is scheduled for launch aboard the Space Shuttle Discovery in Mid-1993.

The conference's first day program will spotlight a panel of experts projecting their visions of the future development of telecommunications, how ACTS will contribute to that evolution and the significance of ACTS to the global marketplace.

Panel members will include representatives from Rockwell International Corp.; Motorola, Inc.; the National Telecommunications and Information Administration; the U.S. Army Space Command and Georgetown University.

- more -

Day two of the conference will feature the keynote address by Gregory M. Reck and Courtney A. Stadd, Acting Associate Administrator and Acting Deputy Associate Administrator for NASA's Office of Advanced Concepts and Technology. Participants also will attend sessions focusing on ACTS-based applications and technical capabilities.

-end-

EDITORS NOTE: News media may attend the conference free of charge. Registration will begin at Noon on Nov. 18. For additional information contact: Jane Homan, NASA Lewis Research Center (216/433-8123).

NASA News

National Aeronautics and
Space Administration

Washington, D.C. 20546
AC 202 453-8400

ISY

Bill Livingstone
Headquarters, Washington, D.C.
(Phone: 202/453-1898)

For Release

November 17, 1992

RELEASE: 92-207

NASA RELEASES FINDINGS OF REVIEW TEAM ON SECURITY CONCERNS

In July 1992, a Management Review Team (MRT) was established, after a classified briefing was presented to NASA Headquarters management by Ames Research Center (ARC) management located at Mountain View, Calif. The briefing identified potential national security problems.

NASA Administrator Daniel S. Goldin determined that the situation at ARC warranted a special one-time review to determine whether the issues and problems existed and, if so, what type of corrective action should be taken. The Federal Bureau of Investigation (FBI), the Department of Justice and the Department of Defense were consulted on the national security and foreign counterintelligence aspects of the problems identified.

"Upon learning about the potential security problems, I immediately ordered a review of the situation," Goldin said. "Based on the review, information has been forwarded to proper authorities. The recommendations of the review are being taken very seriously and I intend to promptly implement them."

Based upon the review and discussions with senior management, the MRT does not believe that the problems encountered at ARC are occuring at other NASA centers.

Findings of Review

ARC is considered "high risk" for hostile intelligence operations. ARC exacerbated a marginally effective security posture by not focusing appropriate management attention on the handling of sensitive technology.

Structural and functional weaknesses existed in the way the ARC security office worked in relation to other center operations. In addition to security concerns, processes and practices in the areas of personnel, legal, procurement, and data and technology protection are contributing to the potential risk rather than serving as controls over the risk.

-more-

The ARC culture and environment were found to be the underlying cause of NASA's vulnerability; the culture is strongly biased toward maintaining an academic reputation, rather than meeting U.S. industry and national needs.

Generally accepted management controls, as well as security, legal, personnel, and procurement policies, are often viewed as impediments and are sometimes sidetracked or avoided. Lax procedures and attitudes were identified that set the stage for widespread dissemination of commercially valuable applied technology being developed by ARC personnel.

ARC's credibility with the U.S. aerospace industry has been damaged as a result of these problems. Some of NASA's customers and partners are reluctant to share important data with NASA for fear it will be disseminated with little or no regard for its sensitivity. In order to regain credibility, specific processes for the identification and handling of sensitive and commercially valuable technologies at ARC must be developed and fully implemented by ARC employees.

To resolve the conflict between NASA's desire to share technology internationally and the need to place U.S. interests first, an environment and culture must be developed at ARC and elsewhere at NASA, which focuses NASA's attention on the needs and expectations of U.S. industry and the taxpayer.

Basic science efforts actively involve and will continue to involve the international community but applied technology, developed at U.S. taxpayer expense, must be protected for U.S. industry use in accordance with applicable laws and regulations. NASA must work internally, and externally with appropriate members of the Administration and Congress to address the problems and develop long-term solutions.

Information Referred to OIG and FBI

The MRT found a number of specific discrepancies in the areas of procurement, misuse of government equipment and apparent violations of the law and/or NASA policy.

The MRT referred this information, as appropriate, to the NASA Office of Inspector General (OIG) and the FBI, which has jurisdiction over foreign counter intelligence issues resulting from the review. Cases were opened up by both the OIG and the FBI.

It is anticipated that the OIG effort will be completed in December 1992.

-more-

Review of the MRT Team

Because the review was unexpected by the ARC workforce and employees of Asian-Pacific ancestry appeared to be disproportionately affected, there was a significant adverse reaction to the review among some of the ARC workforce. The NASA Administrator took immediate action to address employees' concerns. He met with representatives of the ARC Asian Pacific Island Advisory Group to discuss their concerns.

The Administrator also appointed an Assessment Panel on Aug. 26, 1992, to assess the approach and process used by the MRT. The assessment panel was charged with examining the concerns that could have unnecessarily increased the levels of employee discomfort or organizational disruption flowing from the review.

It was also tasked to make recommendations that would alleviate employee concern about the process, and minimize difficulties, should a similar review be required in the future.

The Assessment Panel concluded that "the scope and objective of the management review were legal and that individuals were not selected for interview and search of their workplaces based upon their race or national origin."

"The Panel further concluded that there was a confluence of factors prior to, during and after the management review, some of which were avoidable and some not, which caused negative reactions within the workforce."

-end-

NASA News

National Aeronautics and
Space Administration

Washington, D.C. 20546
AC 202 453-8400

ISY

For Release

Jim Cast
Headquarters, Washington, D.C.
(Phone: 202/453-8536)

November 23, 1992

Jeff Carr
Johnson Space Center, Houston
(Phone: 713/483-5111)

Maj. Dave Thurston
U.S. Air Force
(Phone: 703/695-5766)

EDITORS NOTE: N92-100

STS-53 PUBLIC AFFAIRS ACTIVITIES DURING CLASSIFIED OPERATIONS

STS-53, NASA's 52nd Space Shuttle flight, currently is scheduled for liftoff at 6:59 a.m. EST, Dec. 2. The primary payload flying aboard Discovery is designated Department of Defense-1 (DoD-1) and is classified. No public discussion will take place before, during or after the mission concerning the identity and purpose of DoD-1.

At the request of the DoD, slight alterations will be made as to how "normal" public affairs activities will take place during the first few hours of the mission. The major changes are:

o At no time during the mission will television images of the payload bay be transmitted.

o In-cabin television will be shown only after completion of DoD-1 operations.

o After the flight crew is given a "go" for orbital operations (following Payload Bay door opening), periodic mission control public affairs commentary will be restricted to orbiter/crew status until DoD-1 operations are complete. Television transmissions via NASA Select during this time will not include images revealing or relating to DoD-1 operations.

o DoD-1 operations are scheduled to begin approximately 6 hours into the flight. When these activities are completed, normal mission commentary and television coverage will commence and continue throughout the remainder of the flight.

- end -

NASA News

National Aeronautics and
Space Administration

Washington, D.C. 20546
AC 202 453-8400

ISY

Mark Hess
Headquarters, Washington, D.C.
(Phone: 202/453-8536)

Barbara Schwartz
Johnson Space Center, Houston
(Phone: 713/483-5111)

For Release
November 23, 1992

EDITORS NOTE: N92-101

CHANGE IN SPACE SHUTTLE PREFLIGHT BRIEFINGS SET

Beginning with the first Space Shuttle flight in 1993, the format for preflight mission briefings will change. The mission overview and crew briefings will be held approximately 2 weeks before the flight instead of a month before the mission.

In conjunction with this change, NASA will no longer conduct round-robin interviews with astronauts in this timeframe. One-on-one interviews with crew members still will be accommodated up to 60 days prior to each flight. In addition, extensive pre-taped interviews with each crew member will be provided to media upon request.

Accredited reporters are invited to submit questions for incorporation into the taped astronaut interviews. Questions for the STS-54 crew should be sent to NASA Johnson Space Center, Attn: AP3/Media Services Branch, Houston, 77058, by Nov. 25.

All briefings will be broadcast on NASA Select television, and reporters are invited to participate at the originating location or by two-way audio from other NASA locations. The next preflight briefings are scheduled for early January, and an announcement will be issued with the schedule in December.

NASA Select television is carried on Satcom F2R, transponder 13, at 72 degrees west latitude.

-end-

NASA News

National Aeronautics and
Space Administration

Washington, D.C. 20546
AC 202 453-8400

ISY

Paula Cleggett-Haleim
Headquarters, Washington, D.C.
(Phone: 202/358-0883)

For Release

November 24, 1992

EDITORS NOTE: N92-103

HUBBLE, GALILEO BRIEFINGS SET FOR DECEMBER 1

Hubble Space Telescope astronomers will present the first detailed images of galaxies as seen more than 4 billion years ago at a briefing on Tuesday, Dec. 1, at 1 p.m. EST in the NASA auditorium, 400 Maryland Ave., S.W., Washington, D.C.

Serendipitously, the Hubble images also may have revealed the farthest cluster of galaxies ever seen, located 10 billion light-years away.

Dr. Alan Dressler, Carnegie Institution, Washington, D.C., will describe the shapes and evolution of these primordial galaxies. The Hubble pictures are sharp enough to distinguish between the various forms of galaxies.

Dr. Peter Stockman, Acting Director of the Space Telescope Science Institute, will join host Dr. Stephen Maran, from NASA's Goddard Space Flight Center, Greenbelt, Md., with veteran panelists Dr. Bruce Margon, Professor of Astronomy and Chairman of the Department of Astronomy, University of Washington, Seattle, and Dr. Daniel Weedman, Professor of Astronomy at Pennsylvania State University, University Park.

Galileo Flyby Briefing

Originating from NASA's Jet Propulsion Laboratory, Pasadena, Calif., at 2 p.m. EST, project officials will discuss the Galileo Earth flyby to occur on Dec. 8 and scientific observations of the Earth and moon.

William J. O'Neil, Galileo Project Manager, will describe the flyby maneuver, the third in Galileo's Venus-Earth-Earth gravity assist trajectory, and outline plans for the mission to Jupiter.

- more -

Dr. Torrence V. Johnson, Galileo Project Scientist, will discuss planned scientific activities, which include first-time surveys of the north-polar regions of the moon. Galileo also will observe the Earth for a period of more than a week and will calibrate its instruments for the Jupiter mission of 1995-1997.

Both briefings will be carried live on NASA Select television, Satcom F-2R, Transponder 13, 72 degrees west longitude, frequency 3960.0 MHz, audio 6.8 MHz. Questions will be taken from NASA centers.

- end -

NASA News

National Aeronautics and
Space Administration

Washington, D.C. 20546
AC 202 453-8400

ISY

For Release

Barbara Selby
Headquarters, Washington, D.C.
(Phone: 202/358-1983)

November 25, 1992

RELEASE: 92-209

TECHNOLOGY TRANSFER PARTNERSHIP INITIATIVE INTRODUCED

The National Technology Transfer Center (NTTC) has launched an initiative to foster innovative approaches to transfer and commercialize federally developed technologies.

The Strategic Partnership Initiative will fund competitively selected proposals with matching awards of up to $200,000 with the goal of fostering new and productive technology transfer and commercialization partnerships between federal laboratories, U.S. industry, research universities and state, local and non-profit economic development and related organizations.

"This initiative directly addresses the need to better leverage the nation's investment in federal research and development, and thus strengthen U.S. economic competitiveness," said Frank E. Penaranda, Director of NASA's Technology Transfer Program in the Office of Advanced Concepts and Technology. "I encourage U.S. industry and others to respond to the NTTC's call for proposals."

The NTTC is sponsored by NASA, in cooperation with other Federal agencies, to assist federal technology transfer efforts. The new initiative will become a key component of the NTTC's overall mission to promote and facilitate the transfer of federally-developed technologies to American industry.

The NTTC will accept proposals through Feb. 26, 1993. To receive the request for proposals, contact:

Melanie Griffith
Manager, Strategic Partnership Initiative
National Technology Transfer Center
Wheeling Jesuit College
Wheeling, WV 26003
Telephone: 1-800-678-NTTC

- end -

NASA News

National Aeronautics and
Space Administration

Washington, D.C. 20546
AC 202 453-8400

ISY

Mark Hess
Headquarters, Washington, D.C.
(Phone: 202/453-4164)

James Hartsfield
Johnson Space Center, Houston
(Phone: 713/483-5111)

For Release
November 25, 1992

RELEASE: 92-210

SPACEWALK ADDED TO SHUTTLE FLIGHT, MORE EXPECTED

With just over 3 years left before construction of Space Station Freedom begins in Earth orbit, NASA has decided to add spacewalks to upcoming Shuttle flights when possible, beginning with one during STS-54 in January 1993.

The spacewalks, or extravehicular activities (EVAs), will fine-tune the methods of training astronauts for assembly tasks in space and increase the spacewalk experience levels of astronauts, ground controllers and instructors. EVAs will be added to Shuttle missions only when they can be performed with no impact on the other objectives and they will be the lowest priority activity on each mission.

For STS-54, astronauts Greg Harbaugh and Mario Runco, Jr.,will perform a 5-hour spacewalk evaluating their abilities to move about Endeavour's cargo bay with and without large objects; closely align large objects; and install large equipment. In addition, the tests will provide information on the amount of time required for various tasks and for the astronauts to become acclimated to the spacewalk environment.

STS-54 is the only Shuttle flight to have a spacewalk officially added as part of the new tests. However, several other 1993 Shuttle flights as well as many in the following years are being studied as candidates for further spacewalk additions.

Although spacewalks have been conducted periodically on NASA flights since the Gemini Program in the mid-1960s, the tasks being performed outside the spacecraft have become, in general, increasingly more demanding. The challenge will continue to increase when Space Station Freedom construction begins in March 1996.

-more-

During spacewalks performed on Shuttle mission STS-49 in May to repair the INTELSAT VI satellite and test Freedom construction techniques, differences between ground training and actual orbital tasks were noted that can significantly affect the performance of a spacewalk. The effect of these differences could become more pronounced as the duration and complexity of the spacewalk work grows.

The spacewalk tests to be conducted during the years leading up to Space Station Freedom construction will help characterize the exact nature of these differences and assist in developing better training of astronauts for spacewalking construction work. They will characterize astronauts' abilities to move large objects in space and evaluate the amount of time required to perform various tasks. Also, they will attempt to identify the physical demands of various spacewalk jobs and evaluate new training techniques.

-end-

NASA News

National Aeronautics and
Space Administration

Washington, D.C. 20546
AC 202 453-8400

ISY

For Release

David W. Garrett
Headquarters, Washington, D.C.
(Phone: 202/453-8400)

November 30, 1992

RELEASE: 92-211

NASA SEEKS PUBLIC COMMENT ON NEW PROCUREMENT PROCEDURES

NASA plans to publish a request in the Federal Register for public and industry comment on new procedures to simplify and expedite the award of mid-range contracts, which account for 80 percent of the agency's procurement actions.

"It is incredible to think that these contracts, which range from $25,000 to $2.5 million, frequently require as much paperwork and time to complete as contracts worth hundreds of millions of dollars. This is a costly, wasteful situation that discourages small business, and we aim to change it," said NASA Administrator Daniel S. Goldin.

Goldin said that under the proposed procedures, both solicitations by the agency and documentation required of potential contractors would be greatly simplified. The goal is to reduce cost, improve the quality of goods and services purchased by NASA, and encourage small and disadvantaged business to participate in the nation's space and aeronautics research programs.

"This procurement reform is perhaps the most revolutionary approach to government contracting in many years," Goldin said. "This will merge the capabilities of electronic technologies of the 1990s with greater empowerment of people directly responsible for the process, straightforward evaluation and documentation simplification. We aim to create a system -- with input from the public and industry -- which will significantly reduce the time and effort involved in procurement."

After the 45-day public comment period, the new mid-range procedures initially will be tested at a NASA field center. Based upon the results of this test, the agency will seek authority to expand mid-range procedures to the remainder of its centers.

- more -

Electronic Bulletin Board to Speed Process

An electronic bulletin board -- called the NASA Acquisition Bulletin Board (NABB) -- would be used as the primary means of publicizing requirements and providing copies of solicitations. There would be no charge for access to the NABB other than the user cost of a phone call. This would eliminate the inherent delays in using Commerce Business Daily to publicize requirements and the mails to provide copies of solicitations.

NASA mid-range solicitations would clearly explain requirements considered of major importance. A buying team -- a group of two to four people intimately familiar with the procurement requirements and unburdened by layers of bureaucracy -- will focus on these key aspects in the evaluation and source selection.

"Mid-range solicitations would be stripped of much of the 'boilerplate' language associated with government procurement. Small firms would be encouraged to do business with the government rather than be intimidated. The buying team's documentation requirements would be relaxed to a more reasonable standard," Goldin said.

All procurement decisions would be made by the buying team. It is expected that these new, simplified procedures could ultimately be used for all but the most complex procurements.

- end -

NASA News

National Aeronautics and
Space Administration

Washington, D.C. 20546
AC 202 453-8400

ISY

For Release

November 30, 1992

Mark Hess
Headquarters, Washington, D.C.
(Phone: 202/453-4164)

Billie Deason/Kyle Herring
Johnson Space Center, Houston
(Phone: 713/483-5111)

RELEASE: 92-212

SOYUZ AS SPACE STATION EMERGENCY VEHICLE IS FOCUS OF MEETING

A group of NASA and Russian officials began 2 weeks of working group meetings today at the Johnson Space Center (JSC), Houston, to discuss the feasibility of using the Soyuz TM capsule as a means of returning Space Station Freedom crews to Earth in an emergency when the Space Shuttle is not docked at the orbiting laboratory.

NASA and NPO-Energia, a Russian company, will meet for the next 2 weeks for a final review on the feasibility of using the Soyuz TM spacecraft as an Assured Crew Return Vehicle (ACRV) for astronauts aboard the space station. Various concepts are being considered for the ACRV, one of which is the Soyuz spacecraft.

"Many configurations have been analyzed to support the space station, and the Soyuz TM with its three-person capability may provide an interim solution to allow an early permanently-manned capability for Freedom," said Jerry Craig, ACRV Project Manager.

This meeting continues efforts between NASA and NPO-Energia that began earlier this year when the two entered into a study contract.

A number of the Russian participants in the working group sessions were previously involved with the highly successful Apollo-Soyuz Test Project conducted between the U.S. and USSR during the 1970-1975 time period. This will be their first visit to JSC since that time.

- end -

EDITOR'S NOTE: Meeting attendance is limited to official members of the working groups. News media may request interviews through the Public Affairs Office newsroom by calling 713/483-5111.

NASA News

National Aeronautics and
Space Administration

Washington, D.C. 20546
AC 202 453-8400

ISY

For Release

Paula Cleggett-Haleim
Headquarters, Washington, D.C.
(Phone: 202/358-0883)

December 1, 1992
Embargoed Until 1 p.m. EST

Jim Elliott
Goddard Space Flight Center, Greenbelt, Md.
(Phone: 301/286-6256)

Ray Villard
Space Telescope Science Institute, Baltimore, Md.
(Phone: 410/338-4757)

RELEASE: 92-213

HUBBLE TELESCOPE UNCOVERS SECRETS OF GALAXY EVOLUTION

Looking deeply into the universe and far back in time, NASA's Hubble Space Telescope (HST) has found some suspected ancestors of today's galaxies.

The Hubble images reveal that star-forming galaxies were far more prevalent in the clusters of the younger universe than in modern clusters of galaxies near us today.

"The results have important implications for theories of how galaxies have evolved since the beginning of the universe 15 billion years ago," said Dr. Alan Dressler of the Carnegie Institution, Washington, D.C.

Serendipitously, the Hubble observations also might have uncovered the most distant galaxy cluster yet seen. The cluster might be as far as 10 billion light-years, at a "look-back" time corresponding to the early epoch of galaxy formation.

A principal goal for the HST is to trace galaxy evolution through direct observations. This is very difficult to achieve with ground-based telescopes because the tiny images of distant galaxies smear into faint blurs when viewed through Earth's atmosphere.

- more -

HST images of a pair of remote clusters of galaxies, located 4 billion light-years away, allow astronomers to distinguish, for the first time, the shapes of galaxies which existed long ago.

The pictures, taken with HST's Wide Field/Planetary Camera in Wide Field Camera mode, are so detailed that they show a full range of galaxy types inhabiting the universe of 4 billion years ago -- elliptical, spiral, distorted and irregular forms.

The images also reveal galaxies in collision. Some are tearing material from each other. Others are merging into single systems.

Dressler said the pictures are sharp enough to distinguish between various forms of spiral galaxies, whose distinctive swirl patterns are outlined by vigorous star formation.

"This shows us that clusters billions of years ago contained not only the elliptical and S-zero galaxies like those dominating their descendant clusters today, but also several times as many spiral galaxies," said Dressler. S-zero galaxies are lens-shaped, featureless galaxies that may be the transition between spiral and elliptical galaxies.

Disappearing Galaxies

"The new Hubble data are the first unambiguous sign of the influence of environment on the form of a galaxy" said Dressler. "Clearly, spirals were common in clusters in the distant past, but they have largely disappeared or changed form by now."

Base upon the HST pictures and the results of earlier research with ground-based telescopes, the team thinks that the rapid decline in the spiral galaxy population can be explained by three mechanisms -- merger, disruption and fading.

HST reveals many examples of strong galaxy interactions or mergers in one of the clusters. This is evident by the presence of "tails" distorting the shapes of some galaxies. The tails probably are caused by tidal effects where the gravitational pull between closely passing galaxies stretch and disrupt their stellar distributions.

The result is that many ancient spirals might have merged to form giant elliptical galaxies or simply been torn apart and dispersed by the violence of what Dressler calls the "Cuisinart environment."

Dressler, however, believes that violent collisions are not the whole story of the missing spiral galaxies. His earlier research indicated that bursts of star formation also were much more common in the past. When the star formation subsided in many of these early spiral galaxies, they may have faded and are unnoticed in today's nearby clusters.

Most Distant Galaxy Cluster

The HST observations also may have discovered the farthest cluster of galaxies ever seen, located 10 billion light-years away. The HST picture resolved a cluster of about 30 very faint objects.

"The smaller, more compact appearance of the objects suggests that they are in the background, much further away than the foreground galaxies," said Dressler.

Additional evidence comes from the presence of a quasar possibly among the faint objects. Ground-based spectral observations of the quasar's redshift, an indicator of cosmological distances, place the quasar at a distance of 10 billion light-years.

Quasars are theorized to be the extraordinarily bright, active cores of primordial galaxies. Quasars were prevalent in the early universe and hence, most are located out at 10 billion light-years.

"Though the superposition of the cluster objects and the quasar could be a coincidence, both are so unusual that there is good reason to believe that all are members of the same cluster" said Dressler.

The bright spots which might accompany the quasar do not resemble the elliptical and spiral galaxies of today, according to Dressler. "Conceivably, the objects might not be separate galaxies but rather 'hot spots' in galaxies whose full, extended forms are too faint to be seen in the Hubble observations."

Dressler suggested that the small spots seen in the more distant cluster could be sites of vigorous star formation. This would explain their blue colors, because young, massive stars are brightest in blue and ultraviolet light.

"If the cluster is as far as the quasar, then it will offer an unprecedented opportunity to learn how galaxies formed. With so many objects, it seems likely that among them are the ancestors of common galaxies like our own Milky Way."

- more -

The team believes that the further study of this cluster and similar ones could provide a major breakthrough in seeing galaxies in the very act of formation.

The research was carried out by Drs. Dressler, Augustus Oemler of Yale University, James E. Gunn of Princeton University and Harvey Butcher of the Netherlands Foundation for Research in Astronomy.

When HST's full optical capabilities are restored during a Space Shuttle servicing mission in late 1993, HST will be able to resolve the morphology of these very young galaxies. Hubble will be capable of showing the evolution of galaxy form over a wide range of environments and in even earlier epochs. This will greatly aid astronomers in their efforts to understand this key piece of the cosmological puzzle.

The Hubble Space Telescope is a project of international cooperation between NASA and the European Space Agency.

- end -

EDITORS NOTE: Photos to illustrate this story are available to the news media by contacting the NASA Headquarters Newsroom at 202/453-8400.

NASA News

National Aeronautics and
Space Administration

Washington, D.C. 20546
AC 202 453-8400

ISY

For Release

Mark Hess
Headquarters, Washington, D.C.
(Phone: 202/453-4164)

December 1, 1992

RELEASE: 92-214

MANAGEMENT CHANGES MADE TO SPACE STATION PROGRAM

Culminating 6 months of reviews, NASA today announced plans to consolidate some management functions for the Space Station Freedom program and create a contractor-led integration team to ensure the successful building and deployment of the international space station.

"These moves will improve overall program management and significantly strengthen the integration of the various station elements," said Arnold Aldrich, Associate Administrator for Space Systems Development. "We foresee no schedule or budgetary impact from these changes. In fact, when fully implemented, these changes will reduce 'overhead' costs and strengthen program execution and accountability."

NASA plans to combine the existing Level 1 (Headquarters) and Level II (Reston) Space Station Freedom offices in Reston, Va. This step will consolidate overall program management at Reston. "Reston will remain the focal point for the space station program for the foreseeable future," said Aldrich.

NASA also is working toward establishing a Joint Vehicle Integration Team (JVIT) at the Johnson Space Center, Houston. The JVIT will be staffed by the 3 space station prime contractors (Boeing, McDonnell Douglas and Rocketdyne). NASA will manage the JVIT contract.

"It is my strong view, which is shared across NASA senior management, that these changes are essential to the successful implementation of this program," said Aldrich. "Further, they are consistent with the findings of a number of internal NASA reviews and with congressional direction. The changes are fully supported by the space station hardware contractors and by Grumman." Grumman is the space station engineering and integration contractor who will participate with the JVIT and who will continue at Reston as the program integration contractor.

Aldrich said, "With these changes, the civil service manpower level at Reston will likely increase above the current level of about 210."

- more -

Aldrich said Richard Kohrs will continue as Director, Space Station Freedom and will be located at Reston. He added that the Deputy Director for Program and Operations would be transitioned to the Johnson Space Center to provide for full and effective management of the Freedom program, including the JVIT.

According to Aldrich, details of these changes will be spelled out in a transition plan developed by Kohrs by mid-February 1993. The plan will clearly define the roles and responsibilities for the space station offices at Reston; the Lewis Research Center, Cleveland; the Johnson Space Center, Houston; the Marshall Space Flight Center, Huntsville, Ala.; and the Kennedy Space Center, Fla.

Kohrs plan also will address longer-range plans to consolidate Space Shuttle and space station operations by mid - 1997 and combine the Shuttle and station programs by late 1999. "This will result in significant economies of scale in the outyear budget for space station operations and will greatly improve the overall operations management of both programs," said Aldrich.

"Over the course of the last few years, the men and women of the NASA team have made substantial progress in meeting key program milestones," Aldrich said. "However, as the program shifts its emphasis from design activities to hardware development, manufacturing and integration, the buildup to support these activities at the NASA Centers was planned and is required."

Aldrich said these changes have been reviewed with the Office of Management and Budget and the Congress and will be presented to the President-elect's transition team in the near future.

- end -

NASA News

National Aeronautics and
Space Administration

Washington, D.C. 20546
AC 202 453-8400

ISY

For Release

December 2, 1992

Brian Dunbar
Headquarters, Washington, D.C.
(Phone: 202/358-1547)

Randee Exler
Goddard Space Flight Center, Greenbelt, Md.
(Phone: 301/286-8955)

RELEASE: 92-215

UNITED STATES AND CANADA ANNOUNCE NEW ECOLOGICAL STUDY

NASA and several other U.S. and Canadian agencies have selected an international team of more than 200 scientists to study the relationships between northern forests and the atmosphere and how those relationships affect the global environment.

The Boreal Ecosystem-Atmosphere Study (BOREAS) is intended to conduct ground-based, airborne and satellite measurements in a 4-year, $30-million program. The campaign will be conducted in the northern, or boreal, forests of central Canada in 1993 and 1994.

The campaign comprises a range of related investigations to study the ecosystem's climate, drainage, soil and vegetation, their internal dynamics and links to the global environment.

One study area will be the forest's role in regulating climate. Many scientists predict that if the climate warms, large amounts of carbon dioxide and methane, greenhouse gases that trap heat near the Earth's surface, could be released from boreal soil and vegetation. This release could in turn increase local temperatures, feeding back into global climate change.

"The entire boreal forest could undergo major changes if the climatic warming, that some people have predicted, comes to pass," said Dr. Diane E. Wickland, BOREAS Program Manager at NASA Headquarters, Washington, D.C. "BOREAS is an exciting opportunity to examine the boreal forest's exchanges of 'greenhouse gases,' its regional energy balance and its ecological vitality."

- more -

Predicting Change

"It is vitally important that we learn more about how the boreal forest functions and interacts with the climate system so that we may predict how the boreal forest might respond to change," she said.

The study will be conducted at two sites, each approximately 240 square miles (600 square kilometers), in and around Prince Albert National Park, Saskatchewan, and Nelson House, Manitoba, Canada. These sites represent ecological conditions typical of the boreal forest's northern and southern limits and lie in the continental interior, where climatic warming and drying could be severe.

The study also investigates the exchanges of energy, water and heat between the boreal forest and the atmosphere. The study also will seek to develop remote-sensing techniques so that understanding of boreal-atmosphere exchange processes can be extended from local to regional scales.

BOREAS is a component of both the U.S. and Canadian global change research programs. NASA's component is part of Mission to Planet Earth, the agency's long-term effort to study the Earth as a global environmental system.

Mission to Planet Earth programs will monitor the interaction of large environmental components -- land, oceans, atmosphere and biosphere -- to allow scientists to better understand natural changes in the Earth and to differentiate natural change from human-induced changes.

NASA and the Canadian BOREAS Coordinating Committee received 229 proposals in response to their joint solicitations for the study. These proposals were evaluated by an international scientific peer review panel for overall scientific merit and then further analyzed to achieve a selection that provided for a balanced project, including the required measurements, analyses and modeling for BOREAS.

Collaborative Special Project

The recommended Canadian university proposals were combined into a Collaborative Special Project proposal for review and consideration by the Natural Science and Engineering Research Council (NSERC) of Canada. Eighty proposals were selected by NASA, the CBCC and NSERC for participation in BOREAS. Fifty-one are from U.S. institutions, 23 from Canadian institutions and six were from European institutions.

The U.S. investigations include 22 government proposals, 24 from universities and five from private organizations. The Canadian investigations were divided between 11 government studies and 12 university proposals.

The U.S. and Canadian organizations providing core funding for BOREAS are NASA, the National Oceanic and Atmospheric Administration, the Environmental Protection Agency, the National Science Foundation, NSERC, Environment Canada, Forestry Canada, Energy, Mines and Resources Canada and Agriculture Canada.

Other participating organizations include the Royal Society of Canada, the U.S. Department of Agriculture, the U.S. Geologic Survey, the Nelson House First Nation, Manitoba Keewatinowi Okimakanak, Inc., and the National Research Council of Canada. BOREAS implementation is being led in the U.S. by NASA and in Canada by the Canada Centre for Remote Sensing.

NASA's portion of BOREAS is managed by the Goddard Space Flight Center, Greenbelt, Md., for the Earth Science and Applications Division of the Office of Space Science and Applications. Dr. Piers Sellers and Dr. Forrest Hall are the project managers.

- end -

Editors Note: A listing of BOREAS investigations and principal investigators is available by calling the NASA Headquarters News Room on 202/453-8400.

NASA News

National Aeronautics and
Space Administration

Washington, D.C. 20546
AC 202 453-8400

ISY

For Release

Donald L. Savage
Headquarters, Washington, D.C.
(Phone: 202/453-8400)

December 2, 1992

RELEASE: 92-216

NASA TO BOOST CONTRACTING WITH SMALL, DISADVANTAGED BUSINESSES

NASA Administrator Daniel S. Goldin today announced that $310 million would be set aside under a determinations and Findings (D & F) to ensure NASA reaches the congressionally-mandated goal of awarding at least 8 percent of its contracts and subcontracts to small, disadvantaged and women-owned businesses.

The goal covers small business concerns or other organizations owned and controlled by socially and economically disadvantaged individuals including women-owned businesses, Historically Black Colleges and Universities and minority educational institutions.

"NASA is committed to meeting our self-imposed deadline of reaching this goal by 1994," Goldin said. "These contracts will be in addition to our 8 (a) procurements and will round out our strategy for emphasizing contract and subcontract opportunities for small disadvantaged businesses (SDBs).

"I'm confident that Congress will support this determination as an aggressive means of meeting the goal they set for us," Goldin said.

The law provides for exceptions to the requirement that government contracts be fully and openly competed when the head of an agency determines that use of other than competitive procedures is in the public interest.

Goldin said that without a means for limiting competition to small, disadvantaged concerns, achieving the goal is problematical at best. He made the announcement in a speech before the American Astronautical Society in San Francisco.

During the first 6 months of fiscal year 1992 (Oct. 1, 1991 - March 31, 1992), NASA's total procurements were $7.932 billion. Of this, small, disadvantaged firms received $128 million, with $34 million awarded to small women-owned firms.

- more -

Greater Agency Emphasis on SDB Contracting

In addition to setting the target date for achieving the goal, NASA has taken a number of other steps to improve SDB contracting and subcontracting. These include elevating the position of the Director of the Office of Small and Disadvantaged Business Utilization to the level of Assistant Administrator and increasing the responsibility of the associate administrators and center directors in achieving the 8 percent goal.

Also, a number of policies have been established which emphasize SDB contracting and subcontracting, such as greater consideration in the early phases of procurement, increased emphasis on SDB subcontracting in source selections and greater consideration of SDB subcontracting in award fee determinations.

Designed to be a one-time effort, the D & F contains a list of 26 requirements for contracts at NASA centers. The list includes a $70 million, 5-year support service contract at the Marshall Space Flight Center, Huntsville, Ala.; a $40 million, 5-year contract to provide personal computers at the Johnson Space Center, Houston; a $1 million contract for construction of new roads at the Ames Research Center, Mountain View, Calif.; and a $45 million, 7-year contract to provide technical, engineering and related computer support at the Lewis Research Center, Cleveland.

Other contracts listed in the D & F include administrative support services, hazardous material disposal, air traffic control support services, various infrastructure improvements and maintenance contracts, analysis and evaluation services, and Russian language liaison support.

- end -

EDITOR'S NOTE: Copies of the plan "Determination and Findings, Authority to Use Other Than Full and Open Competition," which includes information on the 26 contracts to be awarded, are available to news media by calling the NASA Headquarters Newsroom on 202/453-8400. After Dec. 4, the Headquarters Newsroom can be reached on 202/358-1600.

NASA News

National Aeronautics and
Space Administration

Washington, D.C. 20546
AC 202 453-8400

ISY

For Release

Drucella Andersen
Headquarters, Washington, D.C.
(Phone: 202/453-8613)

December 3, 1992

EDITORS NOTE: GOLDIN TO ADDRESS MAJOR AERONAUTICS ISSUES

NASA Administrator Daniel S. Goldin will make a major aeronautics policy speech at a luncheon sponsored by the American Institute for Aeronautics and Astronautics on Wednesday, Dec. 9, 1992, 1 p.m. EST, at the Crystal Gateway Marriott, Arlington, Va.

A key feature of the address will be Goldin's report on the round of meetings he recently completed with the chief executive officers of major American aircraft and engine manufacturers to discuss how NASA can better meet their companies' needs. NASA is developing plans to work even more closely with the U.S. aerospace industry to increase the nation,s competitiveness in the world aviation marketplace.

Media representatives wishing to cover Goldin's speech should contact Gayle Armstrong at AIAA, 202/646-7432.

-end-

NASA News

National Aeronautics and
Space Administration

Washington, D.C. 20546
AC 202 453-8400

ISY

Paula Cleggett-Haleim
Headquarters, Washington, D.C.
(Phone: 202/358-0883)

Jim Wilson
Jet Propulsion Laboratory, Pasadena, Calif.
(Phone: 818/354-5011)

For Release
December 7, 1992

NOTE TO EDITORS: N92-105

GALILEO EARTH-MOON FLYBY BRIEFING SET FOR DEC. 8

Galileo officials will describe the Earth-Moon flyby at a briefing on Tuesday, Dec. 8, at 1 p.m. EST. The briefing will originate from NASA's Jet Propulsion Laboratory (JPL), Pasadena, Calif. Reporters can participate from the NASA Headquarters auditorium, 400 Maryland Ave., S.W., Washington, D.C.

NASA's Galileo spacecraft swings past the Earth on Dec. 8 for its last gravity assist on the way to Jupiter, with a closest approach to Earth at 10:09 a.m. EST.

Project Manager William J. O'Neil and Mission Director Neal Ausman will describe the flyby, mission plans and Galileo's status. Project Scientist Torrence V. Johnson and other members of the science team are expected to discuss ongoing Earth-Moon scientific activities and present some of the earliest results.

Galileo is scheduled to continue observing Earth and Moon for a week or more, and a preliminary science briefing at JPL is set for Dec. 22 at 1 p.m. EST.

A program, called "Blue Room," will provide up-to-date information on mission and science operations and present sample images starting at 9:30 a.m. EST. The conference and some of the Blue Room activity will be carried live on NASA Select television, Satcom F2R, 72 degrees west longitude, Transponder 13, C-Band.

- end -

NASA News

National Aeronautics and
Space Administration

Washington, D.C. 20546
AC 202 453-8400

ISY

Drucella Andersen
Headquarters, Washington, D.C.
(Phone: 202/453-8613)

For Release

December 8, 1992

EDITORS NOTE: N92-106

GOLDIN TO ADDRESS MAJOR AERONAUTICS ISSUES

NASA Administrator Daniel S. Goldin will make a major aeronautics policy speech at a luncheon sponsored by the American Institute for Aeronautics and Astronautics on Wednesday, Dec. 9, 1992, 1 p.m. EST, at the Crystal Gateway Marriott, Arlington, Va.

A key feature of the address will be Goldin's report on the round of meetings he recently completed with the chief executive officers of major American aircraft and engine manufacturers to discuss how NASA can better meet their companies' needs. NASA is developing plans to work even more closely with the U.S. aerospace industry to increase the nation,s competitiveness in the world aviation marketplace.

Media representatives wishing to cover Goldin's speech should contact Gayle Armstrong at AIAA, 202/646-7432.

-end-

NASA News

National Aeronautics and
Space Administration

Washington, D.C. 20546
AC 202 453-8400

ISY

Donald L. Savage
Headquarters, Washington, D.C.
(Phone: 202/358-1600)

For Release
December 8, 1992

NOTE TO EDITORS: N92-107

HEADQUARTERS NEWSROOM RELOCATION INFORMATION

The NASA Headquarters Newsroom has moved into the new Headquarters building located at 300 E. St., S.W., Washington, D.C., 20546. The room number on the 8th floor is 8K72 (use the west building entrance).

The newsroom phone number is 202/358-1600. The newsroom facsimile (fax) phone numbers are 202/358-4210 and 202/358-4335.

Media briefings, originating either from Headquarters or carried on NASA Select television from the centers, will be held at the old Headquarters building, 6th floor auditorium, 400 Maryland Ave., S.W., until early January.

Orange media badges are not valid in the new building. Media representatives can obtain new badges by contacting the newsroom for further instructions.

- end -

NASA News

National Aeronautics and
Space Administration

Washington, D.C. 20546
AC 202 453-8400

ISY

Paula Cleggett-Haleim
Headquarters, Washington, D.C.
(Phone: 202/358-0883)

James H. Wilson
Jet Propulsion Laboratory, Pasadena Calif.
(Phone: 818/354-5011)

For Release
December 8, 1992

RELEASE: 92-217

GALILEO CRUISES BY THE EARTH

NASA's Galileo spacecraft flew by the Earth this morning at 10:09 a.m. EST at an altitude of 189 miles (304 kilometers) above the South Atlantic Ocean, completing a 3-year gravity-assist program and setting a course to reach Jupiter in December 1995.

This, the third gravity-assist for Galileo, added about 8,300 miles per hour (13,300 kilometers per hour) to the spacecraft's speed in its solar orbit and changed its direction slightly so that its elliptical orbit now will reach to the orbit of Jupiter, about 480 million miles (780 million kilometers) from the sun.

On its way to the Earth encounter the spacecraft flew about 68,000 miles (110,000 kilometers) north of the moon at 10:58 p.m. EST last night. Departing from the Earth in a slightly southerly direction, it again crosses the moon's orbit at about 9:15 p.m. EST today.

The Galileo flight team at NASA's Jet Propulsion Laboratory, Pasadena, Calif., programmed the spacecraft to measure the near-Earth environment and observe Earth and the moon during this flyby. Scientists will obtain a great many images and spectral scans of the northern regions of the moon and of various areas on Earth over a period lasting several days. This provides scientific data from new perspectives in some cases and helps the scientists calibrate their instruments for the Jupiter orbital mission planned for 1995-1997.

The Galileo orbiter will fly ten different elliptical orbits of Jupiter with close passes by each of the major satellites and extended observations of the planet and its magnetosphere. Galileo's atmospheric probe, which will descend into Jupiter's atmosphere on Dec. 7, 1995 to observe that environment for the first time, is being checked out during the near-Earth flight.

The Galileo Project is managed for NASA by the Jet Propulsion Laboratory. The atmospheric probe is provided by Hughes Aircraft Company under contract to NASA Ames Research Center, Mountain View, Calif.

- end -

NASA News

National Aeronautics and
Space Administration

Washington, D.C. 20546
AC 202 453-8400

ISY

Mark Hess
Headquarters, Washington, D.C.
(Phone: 202/453-4164)

Barbara Schwartz
Johnson Space Center, Houston
(Phone: 713/483-5111)

For Release
December 8,1992

RELEASE: 92-218

NASA ANNOUNCES SPACE SHUTTLE CREW ASSIGNMENTS

Veteran NASA astronauts Richard O. Covey and Kenneth Bowersox and ESA astronaut Claude Nicollier have been named to the crew for STS-61, the Hubble Space Telescope (HST) servicing mission.

Covey (Col., USAF) will be the mission Commander, and Bowersox (Commander, USN) will be the Pilot. Nicollier will be a mission specialist. The three join other crew members previously named to the STS-61 flight: Payload Commander Story Musgrave, M.D., and mission specialists Tom Akers (Lt. Col., USAF), Jeffrey A. Hoffman, Ph.D., and Kathryn D. Thornton, Ph.D.

This will mark Covey's fourth Space Shuttle mission. He flew as Pilot on missions STS-51 in 1985 and STS-26 in 1988 -- the return to flight following the Challenger accident. Covey was Commander of STS-38 in 1990.

Bowersox will be making his second flight, having previously flown on STS-50 this past June, the longest Shuttle mission to date. Nicollier will be making his second flight, having flown on the STS-46 mission in July.

Brinkley Named STS-61 Mission Director

Also named today is Randy Brinkley to serve as STS-61 Mission Director for the Office of Space Flight (OSF). Brinkley currently is Special Assistant to OSF Associate Administrator Jeremiah Pearson and will undertake the additional duties for the late 1993 mission to service the Hubble Space Telescope.

- more -

"I've told Randy to work with any and all members of the multi-organizational HST team, to ensure the success of this extremely complex and important mission," said Pearson. "He has full authority to act for me in this regard."

Brinkley (Col., USMC, ret.) spent 25 years in the Marine Corps. As a marine aviator, he accumulated over 4,000 accident-free hours and flew in 42 different types of aircraft. He was flight qualified in both the F/A-18 and AV8B Harrier. He commanded an F-4 squadron and the Marine Corps largest F/A-18 air group.

Upon retiring from the Marine Corps as a Colonel in 1990, he joined the McDonnell Douglas Aircraft Co. and assumed the leadership role as Manager of the company's Strategic Evaluation and Studies Team. Brinkley was named Special Assistant to Gen. Pearson in August 1992.

A graduate of the University of North Carolina in 1965, Brinkley holds masters degrees in Business Administration, International Relations and National Security and Strategic Studies.

The Hubble Space Telescope program is an international cooperative project between NASA and the European Space Agency.

Chief and Deputy Named for Astronaut Office

NASA today also announced that Robert L. "Hoot" Gibson (Captain, USN) has been named Chief of the Astronaut Office at the Johnson Space Center, Houston. Gibson replaced Dan Brandenstein who left NASA in October.

Gibson is a four-time veteran of Space Shuttle missions. He has flown as Pilot on missions STS-41B in 1984 and Commanded STS-61C in 1986, STS-27 in 1988 and the STS-47 mission conducted in September. Gibson also holds the world altitude record - 27,040 feet - in an international class (660 to 1100 pounds) C-1A piston engine aircraft.

Loren Shriver (Col., USAF) has been named Deputy Chief of the Astronaut Office. Shriver has flown on three Shuttle missions. Shriver flew as Pilot on STS-51C in 1985 and commanded the HST deployment mission, STS-31 in 1990, and the STS-46 Tether Satellite System mission in July. Shriver recently has been the acting Deputy Chief of the Astronaut Office.

-end-

NASA News

National Aeronautics and
Space Administration

Washington, D.C. 20546
AC 202 453-8400

ISY

For Release

Bill Livingstone
Headquarters, Washington, D.C.
(Phone: 202/358-1898)

December 9, 1992

RELEASE: 92-219

GOLDIN OUTLINES VISION TO RESTORE AERONAUTICS INDUSTRY

NASA Administrator Daniel S. Goldin today outlined a vision to restore America's leadership in aeronautics that is in a crisis because of growth in air travel and the failure to adequately invest in research facilities and advanced technology.

"America's historic lead in aeronautics is in a nose-dive," Goldin warned. "It's time to make the first 'A' in NASA a capital letter again -- and give aeronautics the attention it deserves."

The aeronautics industry is one of the biggest in the country, employing one million people, generating almost a hundred billion dollars in annual sales and tens of billions in exports.

In 1969, America enjoyed 91 percent of the world's market for transport aircraft. Now it's 67 percent and falling. Europe's Airbus Industries has captured 30 percent of the market with a full line of advanced aircraft and Japan and Taiwan are eagerly eyeing the market.

To restore America's market share and regain the leading edge in aeronautics, Goldin said additional spending must be directed to high speed research, advanced subsonic and systems integration, critical facilities and hypersonic research.

"Aeronautics receives only $1.1 billion of NASA's budget -- that's 7.9 percent. One way or another, that funding must increase," Goldin said.

"The U.S. aeronautics industry is far too important to America's economy and future growth to be left in a holding pattern," Goldin said.

- more -

FIRST PRIORITY -- HIGH SPEED CIVIL TRANSPORT RESEARCH

Goldin said NASA's top priority is the high speed research program, leading to the construction of an economically competitive and environmentally safe high speed civil transport (HSCT).

"It's risky. There's no certain results. But no other step we can take is as critical to America's efforts to restore market share, provide manufacturing jobs, and regain the leading edge in aeronautics, as high speed research," Goldin said.

The HSCT aircraft could carry 300 people over a range of 6,000 miles at almost two and a half times the speed of sound. It would conform to the most stringent noise standards and not harm the atmosphere. And best of all, ticket prices would be competitive with current subsonic aircraft.

"Compared to the Concorde, this high speed civil transport would go twice as far with three times as many people at about one-tenth the ticket price and not damage the ozone layer" Goldin said. "And with its speed, it could do the work of two subsonic aircraft."

Goldin said more should be invested to develop the materials, aerodynamics, propulsion components and advanced flight deck systems to prove the environmental and economic feasibility of the high speed civil transport. Then a decision can be made by industry in about seven years to build a prototype, which could lead to certification of the first aircraft by 2005.

"If we close our eyes to this enormous potential market and do nothing, our aeronautics industry will continue its descent, possibly going the way of the auto, steel, and textile industries," Goldin said.

If foreign competitors build these aircraft, the U.S. market share for long range aircraft could drop from about 65 percent to under 50 percent, costing America 160,000 jobs.

If the U.S. boldly invests in the future and is the one to build the HSCT, AmericaUs market share could grow to nearly 80 percent, and create 140,000 jobs -- the kind of jobs now being lost through defense cutbacks.

According to Goldin, the future market for international travel will be 300,000 passengers by 2000, growing to 600,000 by 2015. The passenger market could support 500-1,000 HSCT aircraft -- orders worth about $200 billion.

- more -

SECOND PRIORITY -- ADVANCED SUBSONICS/SYSTEM INTEGRATION

NASA's second priority in aeronautics is to assist in the systems integration of many emerging technologies into a new air traffic control and communications system to be incorporated into a new fleet of subsonic aircraft -- from transcontinental airliners to single engine planes.

"The rapid advances in small, powerful computers, combined with the near completion of the Global Positioning system (GPS), offers the chance to revolutionize aeronautics on a scale not seen since the invention of the radar," Goldin said.

"We can use technology to leap-frog our competitors, revolutionize the entire aircraft fleet and dramatically increase the amount of air travel the whole system can handle," Goldin said.

"Technology can improve safety, fuel economy, environmental protection, noise reduction and generate a trillion dollars in sales over the next two decades for the aeronautics industry," Goldin said.

In recent years, the United States has lost clear overall technical superiority to our subsidized competitors and is behind in some key areas. For instance, the Airbus A-320 employs advanced supercritical aerodynamics and high lift systems, composite materials in its tail, advanced cockpit systems and fly-by-wire controls.

"Our failure to aggressively embrace new technology is killing us," Goldin said. "Technology is a perishable product. If technology is invented but not used, it's like it doesn't really exist," Goldin said.

NASA should invest in research to make engines more efficient and more quiet.

"We need noise reduction technologies," Goldin said. "Can we risk having our planes shut out of the rest of the world because we didn't make them quieter?"

NASA also needs to research human factors to put pilots in even greater control of their complex machines; hybrid laminar flow control; and new composite materials and fabrication techniques that cost less and weigh less than traditional metals.

"To exploit these innovations to their fullest potential, what is needed is some broad-based systems engineering to revolutionize America's air traffic control and communications system and create a whole new generation of aircraft with fully computerized avionics and GPS-based navigation systems," Goldin said.

"If America is the first to seize these technologies to modernize its air fleet and traffic control and communications system, it will set a new standard that will force the rest of the world to catch up," Goldin said.

THIRD PRIORITY -- UPGRADING INFRASTRUCTURE

NASA's third priority is to upgrade its national aeronautics facilities -- wind tunnels, high speed computing, computational methods, propulsion facilities, testbeds -- that underpin research so we can regain the world class infrastructure that made America the world's aviation leader to begin with.

"Today, U.S. companies are sometimes forced to do their testing in European tunnels because they have capabilities and productivity that we are unable to match," Goldin said.

Goldin said it is going to take billions to upgrade these facilities and make them more productive, but America must be prepared to spend what it takes.

"When our physical infrastructure crumbles, you can see it. In a modern economy, technology is infrastructure, but it largely goes unnoticed. As corporate R&D, government R&D, and defense R&D gets cut back, there is silent dearth of technology that never gets invented because no one tried," Goldin said.

"We must invest in research infrastructure, just as we did during the pioneering days of aeronautics, to keep our competitive edge," Goldin said.

FOURTH PRIORITY -- HYPERSONIC RESEARCH

NASA's fourth priority is continuing research into critical technologies for hypersonics, which may be the solution to low cost access to space.

While the U.S. thought it led the world in hypersonic research with the National Aerospace Plane program, the French and Russians have moved ahead. Japan, China, Germany, Britain, and India are also conducting aggressive hypersonic research programs.

"Last week the French and Russians flight-tested a supersonic combustion ramjet -- on a Russian rocket at speeds up to mach 5.5. We had been working on a similar deal with the Russians, but because of bureaucratic bothers, the French beat us to it," Goldin said.

Goldin said America has always led the world in speed, from the X-1 through the X-15. The death of the superfast X-plane program 25 years ago was one of the first examples of America stepping back from the cutting edge, and a bad omen of things to come.

Now the same arguments against supersonic research are used against hypersonic research: "It's too risky. We might fail."

"This fear of failure is a sickness that's killing America. Since when are we afraid to dare great things?" said Goldin.

"For a small fraction of what we spend on ground transportation or other public investments to stimulate growth, an increase in aeronautic research could be the most highly leveraged investment government can make for the future of the aeronautics industry, and the whole economy which it nourishes," Goldin said.

- end -

NASA News

National Aeronautics and
Space Administration

Washington, D.C. 20546
AC 202 453-8400

ISY

For Release

Bill Livingstone
Headquarters, Washington, D.C.
(Phone: 202/358-1898)

December 9, 1992

RELEASE: 92-220

DRUYUN TO LEAVE NASA

NASA Administrator Daniel S. Goldin announced today that Chief of Staff Darleen A. Druyun will be leaving NASA at the end of the year. Druyun will become a Deputy Assistant Secretary of the Air Force for Acquisition.

"Darleen will be missed at NASA. Her management and leadership skills have been invaluable to making improvements in the way the agency operates. She also has been instrumental in bringing needed reforms in procurement policy at the agency. I'm very proud to have worked with Darleen and am delighted that she will become the highest ranking woman in acquisition in the Air Force," Goldin said.

- end -

NASA News

National Aeronautics and
Space Administration

Washington, D.C. 20546
AC 202 453-8400

ISY

Edward Campion
Headquarters, Washington, D.C.
(Phone: 202/453-8536)

Karl Kristofferson
Kennedy Space Center, Fla.
(Phone: 407/867-2468)

For Release

December 10, 1992

RELEASE: C92-21

KSC EXTENDS MCDONNELL DOUGLAS CONTRACT

NASA's John F. Kennedy Space Center, Fla., has awarded McDonnell Douglas Space Systems Co., Kennedy Space Center Division, a 3-year extension of its existing contract for payload ground operations services, valued at approximately $561.4 million.

The extension, effective Jan. 1, 1993 through Dec. 31, 1995, brings the cumulative value of the contract to $1.2 billion. This is the second extension of the payload ground operations contract awarded to McDonnell Douglas Space Systems Co. in January 1987.

Under the cost-plus-award-fee extension, McDonnell Douglas will continue to provide ground support, test and integration for payload operations at Kennedy Space Center.

-end-

NASA News

National Aeronautics and
Space Administration

Washington, D.C. 20546
AC 202 453-8400

ISY

Terri Sindelar
NASA Headquarters, Washington, D.C.
(Phone: 202/358-2404)

For Release
December 11, 1992

Patrick Golden
Virginia Space Grant Consortium, Hampton, Va.
(Phone: 804/865-0726)

RELEASE: 92-221

EDUCATIONAL BROADCASTS FEATURE ROLE MODELS

To encourage students to study math and science, a 5-part series of teleconferences will be broadcast nationwide highlighting young minority and female student aerospace researchers as role models for middle and high school students.

The series, called "Reaching for the Stars", premiers Dec. 16. Subsequent programs will be broadcast on Feb. 10, March 17, April 7 and May 12. Each half-hour telecast begins at 2 p.m. Eastern time.

"Reaching for the Stars" presents viewers with a realistic picture of the personal and academic paths five college students, from Virginia Space Grant Colleges, took to reach their present courses of study in math, science and engineering. Students will discuss their research and teach a lesson on a basic math or science concept pertinent to their research.

The experiences of the student researchers featured in this series will help student viewers understand the need for strong academic preparation in math and science to take advantage of future high-tech work opportunities. The students will discuss factors that influenced their career choices and suggest ways the student viewers can follow similar paths. The television audience can call in questions to the student researcher during each broadcast.

To register for the free "Reaching for the Stars" series, contact Old Dominion University's Academic Television Services at 800/548-4807. Sites registering will receive satellite coordinates and resource packets with additional classroom activities and suggestions for further readings.

- more

The series also will be broadcast on NASA Select TV, via Satcom F2R, Transponder 13.

"Reaching for the Stars" program highlights include:

• **Dec. 16, 1992** - Apriel Hodari, pursuing a master's degree in physics at Hampton University, is researching the ways in which a laser can be used to detect windshear — the sudden change of wind direction and intensity that can lead to airplane crashes.

• **Feb. 10, 1993** - Rebecca Bourn is in the second year of her master's program in applied math at the University of Virginia, Charlottesville. Bourn has been studying the phenomenon of turbulence in fluid flow. Rebecca is using mathematical models to study the conditions under which turbulence occurs.

• **March 17, 1993** - Wendy Kraus, a senior majoring in chemistry at the College of William and Mary, Williamsburg, is studying the properties of the element boron that may make it an effective protective coating for a space station or during travel to Mars and beyond.

• **April 7, 1993** - Derrek Dunn is working toward his doctorate in Electrical Engineering at Virginia Tech, Blacksburg. Dunn is researching the effects of different Earth orbits on antenna beam efficiency.

• **May 12, 1993** - Lillianne Troeger, a mechanical engineering graduate student at Old Dominion University, Norfolk, is studying how advanced propulsion systems can be applied to civil transportation.

"Reaching for the Stars" is co-produced by the Virginia Space Grant Consortium (VSGC), NASA and Old Dominion University. Substantial support for this series was provided through NASA Headquarters' Minority University Research Program and the Education Division.

The Virginia Space Grant Consortium is part of a nationwide network of NASA's National Space Grant College and Fellowship Program. The VSGC and its 14 partners in Virginia develop programs that promote teacher training and curriculum enhancement and encourage adequate math and science preparation among students for America's future high-tech workforce needs.

-end-

NASA News

National Aeronautics and
Space Administration

Washington, D.C. 20546
AC 202 453-8400

ISY

Donald L. Savage
Headquarters, Washington, D.C.
(Phone: 202/453-8400)

Franklin O'Donnell
Jet Propulsion Laboratory, Pasadena, Calif.
(Phone: 818/354-5011)

For Release
December 11, 1992

RELEASE: 92-222

CASSINI SATURN MISSION, SPACECRAFT FINALIZED

NASA's Cassini mission to Saturn has passed a major milestone with the completion this week of a project-wide critical design review.

The review, which included a comprehensive examination of the mission and spacecraft, closed today at NASA's Jet Propulsion Laboratory, Pasadena, Calif.

"We are very pleased with the outcome of the review and the status of all elements of the project," said Richard J. Spehalski, Cassini Project Manager at JPL. "The design process is moving forward very briskly."

In addition to JPL Cassini team members, the review included presentations by Dr. Hamid Hassan, European Space Agency Project Manager for Cassini's Huygens Titan probe and Dr. Romeo Pernice of the Italian Space Agency which is contributing Cassini's high-gain antenna and science instrumentation.

In other recent activities related to Cassini, NASA issued letters to scientific investigators formally confirming the mission's experiment payload.

The 12 experiments onboard the Cassini orbiter were tentatively selected in 1990, subject to evaluation during an "accommodation period" until the confirmation was issued. Another six experiments are on ESA's Huygens probe.

Planned for launch on a Titan IV-Centaur in October 1997, Cassini will fly by Venus twice as well as by Earth and Jupiter before arriving at Saturn in November 2004 to begin a 4-year orbital tour of the ringed planet and its 18 moons. The Huygens probe will descend to the surface of one of the moons, Titan, in June 2005.

JPL manages the Cassini mission for NASA's Office of Space Science and Applications, Washington, D.C.

- end -

NASA News

National Aeronautics and
Space Administration

Washington, D.C. 20546
AC 202 453-8400

ISY

For Release

December 14, 1992

Paula Cleggett-Haleim
Headquarters, Washington, D.C.
(Phone: 202/358-1547)

Jim Elliott
Goddard Space Flight Center, Greenbelt, Md.
(Phone: 301/286-6256)

NOTE TO EDITORS: N92-108

HUBBLE DISCOVERY BRIEFING

Pre-planetary systems discovered using the Hubble Space Telescope will be the subject of a media briefing Wednesday, December 16, 1992, at 1:00 p.m. EST, in the NASA auditorium, 400 Maryland Ave. S.W., Washington, D.C.

Dr. C. Robert O'Dell, Rice University, Houston, will present his discovery of extended disks of dust-- a prerequisite for the formation of solar systems like our own-- around stars in the Orion Nebula.

Dr. Ed Weiler, HST program scientist, and Dr. Steve Strom, University of Massachusetts, Amhearst, will comment on the significance of the discovery.

A color and a black and white photograph will be distributed at the briefing. Also, a 30-second video will be available to broadcast media.

The briefing will be carried live on NASA Select television, Satcom F2R, 72 degrees west longitude, Transponder 13. Questions will be taken from participating NASA Centers.

- end -

NASA News

National Aeronautics and
Space Administration

Washington, D.C. 20546
AC 202 453-8400

ISY

For Release

Michael Braukus
Headquarters, Washington, D.C.
(Phone: 202/358-0872)

December 14, 1992

Debra Rahn
Headquarters, Washington, D.C.
(Phone: 202/358-1639)

Jane Hutchison
Ames Research Center, Mountain View, Calif.
(Phone: 415/604-9000)

RELEASE: 92-223

NASA SCIENTISTS PARTICIPATE IN RUSSIAN SPACE MISSION

Scientists from NASA's Ames Research Center, Mountain View, Calif., and across the United States will participate in a Russian biomedical space mission later this month.

The Cosmos '92 "biosatellite" is an unpiloted, recoverable spacecraft that carries plant and animal experiments. About 8 feet in diameter, it is scheduled for launch from Plesetsk, Russia, on Dec. 29 on an SL-3 launch vehicle. The mission will last up to 14 days, according to James Connolly, Cosmos Project Manager at Ames.

"This mission will address questions critical to understanding the biomedical effects of prolonged space flight," said Dr. Rodney Ballard, Cosmos Project Scientist at Ames.

NASA investigators will study changes in bone and metabolism in monkeys. They also will examine changes in eye movements and gravity receptors in the inner ear and will analyze urine and plasma samples for signs of bone, muscle and connective tissue breakdown. The animals will be monitored during the mission. Scientists also will conduct post-flight studies.

NASA personnel worked closely with their Russian counterparts to refine in-flight measurements of physiological changes. These measurements will include body temperature, electrical activity of the heart and electrical currents generated in active muscles during space flight.

- more -

Some U.S. scientists will investigate changes in muscles, bone density and the endocrine system. Others will study the immune system, temperature regulation and circadian rhythms. Circadian rhythms are behavioral and physiological rhythms, such as metabolism and sleep rhythms, that follow approximate 24-hour cycles.

NASA engineers and scientists also developed a portable linear sled for use in the ground-based studies of eye movements and gravity receptors in the inner ear.

Cooperation between the U.S. and the former Soviet Union in space life sciences began in 1972 with the signing of a joint agreement on the peaceful and cooperative use of space. Cosmos '92 is the eighth Russian biosatellite mission in which NASA has participated.

Ballard said the cooperative program has provided many benefits to American life science researchers over the years, such as increasingly useful results on how humans, animals and plants react to the weightless environment of space.

Connolly said the Cosmos missions have been particularly useful for studies requiring longer exposures to microgravity. "These missions have provided an experience base among American scientists and engineers that we can and do transfer to the U.S. space program," he said.

Nine U.S./Russian investigator teams, in addition to scientists from France, Canada, the European Space Agency and Eastern Europe will participate in the mission. They will conduct more than 25 experiments on a variety of living systems including seeds, beetles, fish, monkeys and others.

Ames provides project management and experiment development for U.S. participation in the Cosmos program. The Institute of Biomedical Problems in Moscow manages the Russian program. Russia provides the biosatellite, launch vehicle, flight hardware and biological specimens.

The Cosmos Program Manager at NASA Headquarters is Lawrence Chambers. Dr. Frank Sulzman is Program Scientist. The program is sponsored by the Life Sciences Division of NASA's Office of Space Science and Applications, Washington, D.C.

- end -

NASA News

National Aeronautics and
Space Administration

Washington, D.C. 20546
AC 202 453-8400

ISY

Paula Cleggett-Haleim
Headquarters, Washington, D.C.
(Phone: 202/358-0883)

Pete Waller
Ames Research Center, Mountain View, Calif.
(Phone: 415/604-3938)

For Release

December 15, 1992

RELEASE: 92-224

GALILEO'S ATMOSPHERIC PROBE PASSES HEALTH CHECKS

The Galileo spacecraft and its atmospheric probe are now halfway on their complex trip to Jupiter, and the first full tests since launch 3 years ago show that the probe is in good shape, say NASA officials.

"We have, for the first time since launch 3 years ago, checked out the entire probe spacecraft system and run it through a full mission sequence," said Benny Chin, Probe Project Manager, NASA's Ames Research Center, Mountain View, Calif.

"All systems working together, including the seven scientific instruments, are functioning well and will meet mission objectives," he said.

The probe is being carried over most of the half billion miles to Jupiter by the Galileo orbiter. At 51,358,400 miles from the planet, the probe will separate from the orbiter and fly on by itself. This will occur on July 10, 1995, 5 months before arrival at Jupiter.

The probe will make history's first entry into the atmosphere of an outer planet on Dec. 7, 1995. It will slam into Jupiter's atmosphere at 115,000 mph, fast enough to jet from Los Angeles to New York in 90 seconds. Deceleration to about Mach 1 -- the speed of sound -- will take just a few minutes, causing a buildup of heat so intense it will be like flying through a nuclear explosion.

The Galileo probe then will plunge 400 miles through the planet's brilliantly colored cloud layers into the hot, dense atmosphere below -- making history's first direct measurements of Jupiter. As it descends, the probe will gather scientific data about the giant planet's swirling clouds, violent winds and star-like composition, providing clues to the origin of the solar system.

- more -

Health of the Galileo probe was checked in a mission sequence test on Nov. 20, 1992, and a functions test on Dec. 2. Data analysis since then has confirmed that all of the craft's systems are in good condition. A suspected loss of battery power, for example, did not occur. Battery voltages are at the levels of launch day, Oct. 18, 1989.

Entry into Jupiter's atmosphere is the most hazardous in the solar system because the planet's immense gravitational pull creates tremendous speeds. At maximum deceleration, as the craft slows from 115,000 mph to 100 mph, the probe will hurtle against a force 350 times Earth's gravity.

Its incandescent shock wave will be as bright as the sun and reach temperatures up to 28,000 degrees Fahrenheit. After entry, the fore and aft heat shields of the deceleration module will be shed by deploying a small pilot parachute and then a large main chute, exposing the descent module to Jupiter's hydrogen/helium atmosphere.

The probe's total weight is 747 pounds. The deceleration module weighs 484 pounds. The inner descent module carries seven scientific instruments, weighing 66 pounds.

"The tests show that all the instrument parameters are within normal limits," said Ames' Dr. Richard Young, Probe Project Scientist.

To make the first direct measurements of Jupiter, he said, the probe carries an atmosphere structure instrument, a mass spectrometer for atmosphere composition, a cloud instrument, an energetic particle instrument, a lightning detector, a helium detector and a radiometer to chart energy flow in the atmosphere.

Together, they will characterize Jupiter's ionosphere and its atmosphere (composition, temperature, and density), measure wind speeds, cloud characteristics, lightning, the important ratio of helium to hydrogen and the atmosphere's energy balance.

"Because of its size, make-up of original solar system material, and being the biggest of the 'gas giant' outer planets, Jupiter is a scientific treasure trove," said Young. "On the science side, everything is fine so far. We can't wait to get there," he said.

As the probe passes through Jupiter's colored cloud layers, its computer will receive information, process it and transmit the coded signal to the Galileo orbiter, which will relay the data by radio to Earth. The probe descent mission will last about 75 minutes. At this point, a combination of extreme heat, high pressure and degraded battery power will silence the probe forever.

The probe project is managed by the Ames Research Center. The overall Galileo mission is managed by NASA's Jet Propulsion Laboratory, Pasadena, Calif.

- end -

NOTE TO EDITORS: Dramatic mission animation, with new segments on Jupiter's deep atmosphere will be telecast via NASA-Select on Tuesday, Dec. 15, 1 p.m. EST and repeated at other times during the day. This will be carried on Satcom F-2R, Transponder 13, 72 degrees west longitude, 3960 MegaHertz; audio 6.8 MHz, vertical polarization.

NASA News

National Aeronautics and
Space Administration

Washington, D.C. 20546
AC 202 453-8400

ISY

For Release

Dwayne C. Brown
Headquarters, Washington, D.C.
(Phone: 202/358-0547

December 15, 1992

James H. Wilson
Jet Propulsion Laboratory, Pasadena, Calif.
(Phone: 818/354-5011)

RELEASE: 92-225

NASA LASER SPACE COMMUNICATIONS MILESTONE ACHIEVED

A major milestone in space communications was achieved recently when NASA scientists successfully transmitted laser signals to the Galileo spacecraft at a distance of 1.3 million miles (2.2 million kilometers).

"This experiment is part of a program to show that future deep space missions can use laser beams to send back to Earth larger volumes of space-acquired data than is currently possible using radio signals", said Dr. James Lesh, Principal Investigator at NASA's Jet Propulsion Laboratory, Pasadena, Calif.

Laser beams were simultaneously transmitted to Galileo from a 24-inch (61-centimeter-diameter) telescope at Table Mountain Observatory near Wrightwood, Calif., and a 60-inch (1.5-meter) telescope at the U.S. Air Force Phillips Laboratory's Starfire Optical Range near Albuquerque, N.M. Two sites were used to provide signal diversity if weather (i.e. clouds, precipitation) blocked a laser beam at one site. Laser beams from both sites were detected by Galileo's onboard camera.

Called the Galileo Optical Experiment (GOPEX), the experiment began on Dec. 9 as Galileo flew by Earth on its way to Jupiter. The experiment will continue through Dec. 16 when the distance of Galileo will be 3.7 million miles (6 million kilometers).

The experiment is operated by the JPL Telecommunications and Data Acquisition Technology Development Office, with overall management responsibility by NASA's Office of Space Communications, Advanced Systems Program, Washington, D.C.

- end -

NASA News

National Aeronautics and
Space Administration

Washington, D.C. 20546
AC 202 453-8400

ISY

Paula Cleggett-Haleim
Headquarters, Washington, D.C.
(Phone: 202/358-0883)

Jim Elliott
Goddard Space Flight Center, Greenbelt, Md.
(Phone: 301/286-6256)

Ray Villard
Space Telescope Science Institute, Baltimore
(Phone: 410/338-4757)

For Release
December 16, 1992

RELEASE: 92-226

HUBBLE DISCOVERS PROTOPLANETARY DISKS AROUND NEW STARS

NASA's Hubble Space Telescope has uncovered the strongest evidence yet that many stars may form planetary systems.

Dr. C. Robert O'Dell of Rice University, Houston, and colleagues have used Hubble to discover extended disks of dust around 15 newly-formed stars in the Orion Nebula starbirth region 1,500 light-years away.

Such disks are a prerequisite for the formation of solar systems like Earth's, according to astronomers.

"These images provide the best evidence for planetary systems," said O'Dell. "The disks are a missing link in our understanding of how planets like those in our solar system form. Their discovery establishes that the basic material of planets exists around a large fraction of stars. It is likely that many of these stars will have planetary systems."

Hubble Space Telescope's detailed images confirm more than a century of speculation, conjecture and theory about the genesis of a solar system.

According to current theories, the dust contained within the disks eventually agglomerates to make planets. Earth's solar system is considered a relic of just such a disk of dust that accompanied the sun's birth 4.5 billion years ago.

- more -

Before the Hubble discovery, protoplanetary disks had been confirmed around only four stars, Beta Pictoris, Alpha Lyrae, Alpha Piscis Austrini and Epsilon Eridani.

Unlike these previous observations, Hubble has observed newly formed stars less than a million years old which are still contracting out of primordial gas.

Hubble's images provide direct evidence that dust surrounding a newborn star has too much spin to be drawn into the collapsing star. Instead, the material spreads out into a broad, flattened disk.

These young disks signify an entirely new class of object uncovered in the universe, according to O'Dell.

Hubble can see the disks because they are illuminated by the hottest stars in the Orion Nebula, and some of them are seen in silhouette against the bright nebula. However, some of these protoplanets are bright enough to have been seen previously as stars by ground-based optical and radio telescopes. Their true nature was not recognized until the Hubble discovery.

Each protoplanet appears as a thick disk with a hole in the middle where the cool star is located. Radiation from nearby hot stars "boils off" material from the disk's surface at a rate equal to about one-half the mass of Earth per year. This material is then blown back into a comet-like tail by a stellar "wind" of radiation and subatomic particles streaming from nearby hot stars.

Based on this erosion rate, O'Dell estimates that a protoplanet's initial mass would be at least 15 times that of the giant planet Jupiter.

Many of the youngest and hottest stars in the Milky Way Galaxy are found in the Orion Nebula. The nebula is on the near edge of a giant molecular cloud which lies immediately behind the stars that trace the sword of the constellation Orion the Hunter.

The region of Orion is a bright part of the nebula where stars are being uncovered at the highest rate. These results suggest that nearly half the 50 stars in this part of Orion have protoplanetary disks.

O'Dell's co-investigators are graduate students Zheng Wen and Xi-Hai Hu of Rice University and Dr. Jeff Hester of Arizona State University. Their results will be published in the Astrophysical Journal next spring under the title "Discovery of New Objects in the Orion Nebula on HST Images: Shocks, Compact Sources and Protoplanetary Disks."

- end -

NASA News

National Aeronautics and
Space Administration

Washington, D.C. 20546
AC 202 453-8400

For Release

Drucella Andersen
Headquarters, Washington, D.C.
(Phone: 202/453-8613)

December 16, 1992

Alice Ann Toole
Aurora Flight Sciences Corp., Manassas, Va.
(Phone: 703/369-3633)

RELEASE: 92-227

HIGH-FLYING PERSEUS RESEARCH AIRCRAFT READY FOR ROLLOUT

NASA Administrator Daniel S. Goldin will make the keynote speech when a high-flying, unpiloted NASA atmospheric research aircraft called Perseus is unveiled in Manassas, Va., on Dec. 18.

When Perseus starts to fly science missions in 1994, it will gather data to improve knowledge on the atmosphere at very high altitudes, including the possible effect of exhaust emissions from next-generation supersonic airliners.

"Perseus is going to be a valuable new tool for many areas of atmospheric research, especially understanding the processes that control stratospheric ozone levels, so NASA and industry can produce future supersonic transports that are both environmentally safe and economically competitive," Goldin said.

Perseus, designed and built for NASA by Aurora Flight Sciences Corp., Manassas, Va., is the first aircraft designed specifically for atmospheric science. It will carry up to 110 pounds (50 kilograms) of instruments to a maximum altitude of 82,000 feet (25 kilometers).

Much of Perseus' technology derives from sport aviation and the record-breaking Daedalus human-powered aircraft. Perseus' long, slender wing is modeled on the Daedalus design, which had excellent aerodynamic performance. The plane is made of lightweight composite materials, much like sailplanes or gliders.

- more -

Perseus' engine is based on the 4-cycle, 4-cylinder Rotax engine that powers ultralight aircraft around the world, but is highly modified to burn a mixture of gasoline and oxygen diluted by recirculated exhaust gas. Aurora developed the engine under a $500,000 NASA Small Business Innovation Research grant.

Perseus also is breaking new ground in other technologies like the onboard computer which will guide many of its flights using preprogrammed flight plans. The autopilot will keep track of the plane's location via signals from the Global Positioning System constellation of navigation satellites.

NASA has ordered two Perseus aircraft from Aurora Flight Sciences. Successful research missions by the planes could lead to more general use of advanced unpiloted aircraft for Earth science studies.

"Perseus is not only going to do science to improve the environment, but also is building an important new industry for the future," said Aurora Flight Sciences President John Langford. "It is key to a new generation of in situ measurement platforms that will lead to discoveries in areas such as atmospheric science, global warming and the forecasting of severe storms."

-end-

NASA News

National Aeronautics and
Space Administration

Washington, D.C. 20546
AC 202 453-8400

ISY

David W. Garrett
Headquarters, Washington, D.C.
(Phone: 202/358-1600)

For Release
December 21, 1992

RELEASE: 92-228

1992 SEEN AS NASA'S MOST PRODUCTIVE YEAR FOR SCIENCE DISCOVERIES

It was a blockbuster year for NASA space science missions, with scientific discoveries ranging from the beginning of time to black holes to the innermost workings of the human cell.

"Given the unprecedented return on science information and the robust launch record, 1992 was the most productive year in the history of space science," said Dr. Lennard A. Fisk, Associate Administrator for NASA's Office of Space Science and Applications in Washington, D.C.

"NASA is leading the way in a worldwide resurgence of space sciences and exploration with 31 space science missions in operation and returning science. This year is one for the record books," said NASA Administrator Daniel S. Goldin.

"Because of the successes of our operational spacecraft and the new missions undertaken this year, we can look forward to an exciting and increasingly productive future," Goldin said.

Highlighting 1992 were a number of major science discoveries as well as eight successful Space Shuttle missions providing an on-orbit life sciences and microgravity research facility.

Environmental research included studies which indicated the 1992 ozone hole was larger than any previously seen. International cooperation in space missions increased in 1992, and the the ninth NASA Administrator, Daniel S. Goldin, was appointed on April 1.

Secrets Yielded

The Big Bang -- the primeval explosion that began the universe 15 billion years ago -- yielded some of its secrets to the Cosmic Background Explorer spacecraft in 1992. The orbiting observatory detected temperature variations within the glow from the initial expansion of the universe following the Big Bang.

Astronomers came closer this year to understanding mysterious black holes when the Hubble Space Telescope uncovered evidence that there might be massive black holes in the core of two galaxies. The orbiting telescope also provided the first direct view of an immense ring of dust which may fuel a massive black hole at the heart of another galaxy.

Six scientific spacecraft were launched during 1992 to explore the universe, the solar system, the Earth and the Earth-sun environment. Among these was the Mars Observer, America's first mission to the Red Planet since Viking 17 years ago.

Five Spacelab missions aboard the Space Shuttle advanced human understanding of how to live and work in space.

A number of microgravity experiments tested various methods of growing protein and zeolite crystals in space. The results could have major commercial potential and medical applications.

Space technology research in 1992 stressed new methods that robots and humans may eventually use to explore the moon and Mars, including "telepresence" technology that lets a person, wearing a video headset, see remote locations through cameras mounted on a robot. The technology could be used by future astronauts to control robotic explorers on planetary surfaces.

International cooperation was highlighted by the flight of the first Swiss astronaut and the first Italian payload specialist on STS-46 and the first Japanese payload specialist flew on the STS-47 Spacelab mission.

Also, NASA signed a contract with the Russian firm, NPO Energia, focusing on possible use of the Russian Soyuz-TM vehicle as an interim Assured Crew Return Vehicle for space station astronauts.

Dr. Mae C. Jemison became the first African American female astronaut to fly in space in September aboard STS-48.

These subjects and other 1992 NASA activities are covered in the following background release.

- end general release -

EDITORS NOTE: The annual NASA yearender provides a comprehensive review of all major space and aeronautics programs. The entire 1992 document can be obtained by calling the NASA Headquarters newsroom at 202/358-1600.

NASA MANAGEMENT

Daniel S. Goldin became the ninth Administrator of NASA on April 1, appointed by President Bush to succeeded Richard H. Truly. Prior to joining the agency, Goldin was Vice President and General Manager of the TRW Space & Technology Group which built 1 spacecraft during his tenure.

The new Administrator assumed command at a time of shrinking financial resourc caused by the recession, the deficit reduction effort and growing demands in other areas such as education, medical care and housing.

Forecasts indicted that NASA would not receive appropriations sufficient to suppor outyear development of projects initiated prior to the recession, when the outlook for func was more positive.

Goldin initiated a series of efforts to respond to this situation with the goal of preserving essential space exploration and aeronautics research programs despite necessary cost reductions, while permitting the nation to undertake new projects in both areas.

Simultaneously, he launched campaigns to reform the agency's procurement process, introduce greater cultural diversity into the workforce and contracting, renew th NASA's commitment to quality and stimulate public support for the program.

"Cheaper, Faster, Better"

Constantly urging NASA employees and contractors alike to do things "cheaper, faster and better," the Administrator created a group of blue and red teams to review maj NASA projects and their organizational settings.

The blue teams consisted of persons who would examine their own programs for creative ways to reduce cost without compromising safety or science. The red teams were composed of people unconnected with programs who might bring fresh insights or insure that none were stiffled.

This review began in May and has led to significant changes in a number of major projects, with a 17 percent reduction in costs thus far. The process is intended to be on-going.

In a closely related effort, Goldin constantly stressed the adoption of the approache and tools of Total Quality Management (TQM) which calls for a continuous effort to improve quality, reduce cost and speed production.

NASA, he declared in a talk to employees, is a "world class" organization whose people must meet the most stringent standards for excellence measured on a worldwide basis. They were responsible, he said, for increasing efficiency, saving money, improving quality and shortening the time to project fruition - all without compromising safety.

A "Shared Vision" of the Future

Soon after the formation of the blue and red teams, Goldin called on NASA employees to submit their ideas for a NASA "shared vision of what we, as a nation, shoulc strive to accomplish in space." Closely coupled with this was a series of well-attended "town meetings" held in cities throughout the country to give the general public the opportunity to state its view about the future of the space program.

Goldin said the ultimate goal of these activities was to produce a vision of America's future in space that would be shared and support by NASA, Congress, the President and executive branch, academia, the space community and the general public.

In another major effort aimed at insuring quality and controlling cost, the Administrator announced a series of procurement reforms. Awards would be made on th basis of well demonstrated adherence to quality, cost control and schedule maintenance. Award fees would be determined on the same basis, with opportuity for greater gain by staying on schedule and within estimates.

The reforms placed substantial emphasis on opportunity for small and disadvantaged businesses, including culturally diverse businesses. The agency said it would step up deadlines for prime contractors to meet their quota of awards to subcontractors in this category. Incentive fees would stimulate the effort. Paperwork, which discouraged many small firms, was to be reduced substantially.

The Administrator also underscored the need for greater cultural diversity in the agency's workforce, requiring the head of each NASA facility to submit a plan to increase minority hiring. "I am personally and deeply committed to making NASA a model for the nation in building a culturally diverse workforce at every level," he said in a speech. He said he wanted NASA to reflect the nation's "wonderful mosaic of diverse people," and to signal opportunity to young people of all races.

In October, Goldin announced a series of structural changes in the agency's organization designed to focus greater attention on certain projects critical to the nation's future. Mission to Planet Earth to aid the environment would become an individual office as would planetary science and astrophysics, or Mission From Planet Earth, to explore th solar system and look beyond into the universe.

Concern About America's Aeronautics Industry

Aeronautics and space technology development, which were combined in a single office, were to be separated. Goldin stated in a speech that the nation's aeronautics industry was loosing ground to aggressive foreign competitiors to such a degree that it wa in a crisis. He declared that NASA would place substantially greater emphasis on aeronautics and that this would be the sole responsibility of the Aeronautics Office.

Technology was joined to the commercial development function in a "one-stop shopping" concept to serve both NASA and private industry. The goal is speed the introduction of new technology throughout the space program and to enhance the proces of spinoff to American industry which, in the past, has led to thousands of new commercial products and processes.

Goldin maintained an aggressive schedule of speaking throughout the country on a large variety of subjects. Of particular prominence was the effort to explain and win support for a return to the moon and exploration of Mars; to win anew congressional funding for Space Station Freedom; to explain the value of the space program as a nation investment to rebuild technological leadership and hone a competitive edge, and to proclaim the need for far greater international cooperation in space to continue the exploration of the universe beyond planet Earth.

In the latter regard, the Administrator represented the nation in signing historic ne agreements with the Soviet Union that will expand considerably space cooperation betwee the two nations. The agreements provide for the exchange of astronauts and cosmonauts on space flights, study of a Russian vehicle for possible emergency crew return from Spac Station Freedom, a Shuttle-Mir Space Station link-up, and life sciences and robotic exploration activities.

SPACE SCIENCE

EXPLORING THE UNIVERSE

NASA's astrophysics program delivered new and important results about the fundamental nature of the cosmos in 1992. Discoveries throughout the year increased human understanding of the origin and fate of the universe, the laws of physics and the evolution of galaxies, stars and planets.

Highlights of 1992 discoveries made by the Hubble Space Telescope (HST), Compton Observatory, Cosmic Background Explorer (COBE), Roentgen Satellite (ROSAT), Extreme Ultraviolet Explorer (EUVE) are listed below, by astronomical object.

Planets

* Conducting long-term observations of global weather changes on Mars (HST).

* Measured the extent of the atmosphere of the Jovian moon Io and looked for surface changes (HST).

Stellar Evolution

* Provided the first clear view of one of the hottest known stars (360,000 degrees Fahrenheit), which lies at the center of the Butterfly Nebula, NGC 2440 (HST).

Star Clusters

* Discovered a cataclysmic variable star in the core of globular cluster 47 Tucanae, the first known optical counterpart to an x-ray source in a globular cluster (HST).

Stars

* Detected several sources of extreme ultraviolet light through interstellar gas and dust, including the corona of a star, a white dwarf companion star and red dwarf stars (EUVE).

* Discovered unexpected "gamma ray afterglow" on the sun. A strong emanation of high-energy gamma rays persisted for more than 5 hours after a solar flare explosion (Compton).

Pulsars

* Solved 20-year old mystery about the power source of Geminga, a gamma ray pulsar, which was found to be a 300,000 year-old rotating neutron star (ROSAT, Compton).

Galaxies

* Uncovered circumstantial evidence for the presence of a massive black hole in the core of the neighboring galaxy M32 as well as the giant elliptical galaxy M87 (HST).

* Provided the first direct view of an immense ring of dust which may fuel a massive black hole at the heart of the giant elliptical galaxy NGC 4261 and the spiral galaxy M51 (HST).

* Detected for the first time high-energy gamma rays from a class of active galaxy similar to quasars and possibly powered by a black hole (Compton).

* Found three new gamma-ray quasars, detected more than 200 cosmic gamma ray bursts and captured the best ever observation of the glow of gamma radiation from the disk of the Milky Way galaxy (Compton).

Cosmology

* Detected the long-sought variations within the glow from the Big Bang -- the primeval explosion that began the universe 15 billion years ago. This detection is a major milestone in a 25-year search and supports theories explaining how the initial expansion happened (COBE).

* Determined more accurately the expansion rate of the universe by detecting 27 "Cepheid variable" stars in a faint spiral galaxy called IC 4182. Cepheid variables are used to estimate distances to galaxies (HST).

EXPLORING THE SOLAR SYSTEM

Mars Observer

"Launched Sept. 25 aboard a Titan III ELV, "Mars Observer will examine Mars much like Earth satellites now map our weather and resources," said Dr. Wesley Huntress, Director of NASA's Solar System Exploration Division, Washington, D.C.

"It will give us a vast amount of geological and atmospheric information covering a full Martian year. At last we will know what Mars is actually like in all seasons, from the ground up, pole to pole," Huntress said.

On Aug. 24, 1993, the spacecraft will begin orbiting the planet Mars. Mars Observer will provide scientists with an orbital platform from which the entire Martian surface and atmosphere will be examined and mapped by the seven science instruments on board. The measurements will be collected daily from the low-altitude polar orbit, over the course of 1 complete Martian year -- the equivalent of 687 Earth days.

High Resolution Microwave Survey (HRMS)

Initiated on Columbus day, 500 years after the explorer landed in America, the HRMS project began searching for signals transmitted by other civilizations. The search will be conducted in two modes -- a sky survey that will sweep the celestial sphere for signals and a targeted search that will look at about 800 nearby "sunlike" stars. NASA's Deep Space Network, in Goldstone, Calif., and the Aericibo Observatory in Puerto Rico will conduct most of the survey.

Cassini

A comprehensive examination of the Cassini spacecraft and mission, was successfully completed Dec. 11. Cassini is scheduled for launch in Oct. 1997 with an arrival at Saturn in June 2004. Cassini will fly by Venus and twice by Earth and Jupiter before arriving at Saturn to begin a 4-year orbital tour of the ringed planet and its 18 moons.

In addition to the 12 instruments aboard the orbiter, the Huygens probe, built by the European Space Agency, will penetrate the thick atmosphere of Titan (the largest of Saturn's moons) in Nov. 2004.

Ulysses

The Ulysses spacecraft received a gravity assist as it flew by Jupiter on Feb. 8 at 280,000 miles from the planet's center. Ulysses, designed to study the sun's magnetic field and solar wind, used Jupiter's gravity assist to gain the momentum needed to break out of the plane of the ecliptic and into a solar polar orbit. During the hazardous Jupiter fly-by, scientists investigated the interaction of the giant planet's magnetic field and the solar wind.

Pioneer Venus

As expected, after the Pioneer Venus orbiter's maneuvering fuel ran out, it made a fiery entry into Venus' upper atmosphere on Oct. 8. Pioneer Venus had been orbiting the planet since 1978 and over the past 14 years, has returned numerous data about Venus' atmosphere and surface topography.

The first topographic maps of the cloud-shrouded surface of the planet were made using the radar instrument on Pioneer Venus.

Magellan

The Magellan spacecraft, mapping the hidden surface of Venus with radar since August 1990, lowered its closest altitude to Venus on Sept. 14, when it began a full 243-day cycle of gravity mapping.

Magellan has completed three cycles of mapping with its radar, covering 99 percent of the surface of Venus. The objective of cycle 4, which extends to May 15, 1993, is to obtain a global map of the Venus gravity field from the elliptical orbit.

Galileo

NASA's Galileo spacecraft flew by the Earth on Dec. 8 at an altitude of 189 miles (304 kilometers) above the South Atlantic Ocean, completing a 3-year gravity-assist trajectory.

This latest gravity-assist added about 8,300 miles per hour (13,300 kilometers per hour) to the spacecraft's speed in its solar orbit and changed its direction slightly, to put it on an elliptical trajectory directly to the orbit of Jupiter, about 480 million miles (780 million kilometers) from the sun. The spacecraft will arrive at Jupiter on Dec. 7, 1995.

At Jupiter, Galileo will relay data from a probe launched into the planet's atmosphere to obtain direct measurements of that environment for the first time. Over a 23-month period, the spacecraft will fly ten different elliptical orbits of Jupiter, making at least two close passes by each of its four major satellites and carrying out extended observations of the planet atmosphere and magnetosphere.

UNDERSTANDING THE EARTH - SUN ENVIRONMENT

SAMPEX

The Solar Anomalous and Magnetospheric Particle Explorer was launched July 2, is the first of a new series of Small Explorer missions which will enable scientists to develop less costly astronomy and space science experiments in a shorter period of time.

The spacecraft's peculiar 342-by-419-mile-high elliptical orbit will enable the onboard instruments to use the Earth as a giant magnetic shield. By doing this, the 4 instruments can determine if particles are coming from the sun, from the Milky Way Galaxy, or whether they are the anomalous cosmic rays.

SAMPEX is expected to contribute new knowledge and improve understanding of the evolution of the sun, solar system and galaxies.

Geotail

Launched July 24, 1992, Geotail is investigating the interactions of the solar wind and the Earth's magnetosphere, providing scientists with new information on the flow of energy and its transformation in the region called the magnetotail.

The Geotail mission -- a joint U.S./Japanese project -- is the first in a series of satellites in an international program to better understand the interaction of the sun, the Earth's magnetic field and the Van Allen radiation belts.

The solar wind, interacting with the Earth's magnetic field, can cause disruptions in short-wave radio communications and power surges in long transmission lines.

LIVING AND WORKING IN SPACE

During the past year, several opportunities to work in a laboratory in space, perform life and material sciences experiments and learn more about how humans adapt to the space environment have afforded scientists with vital information that may lead to useful commercial and medical applications on Earth.

Microgravity Science

Three spacelab missions were flown to explore the effects of space on protein crystals, electronic materials, fluids, glasses and ceramics and metals and alloys.

Missions flown aboard the Space Shuttle this year include the International Microgravity Laboratory, flown in January; United States Microgravity Laboratory-1, June, and United States Microgravity Platform-1, October. The September flight of Spacelab-J, the Japanese Spacelab, also included NASA-sponsored microgravity experiments.

A total of 45 NASA sponsored microgravity experiments flew on these missions. They were exposed to the microgravity environment for an average of approximately 10-days. These flights represented more peer-reviewed, hands-on microgravity research than had been conducted by the United States since Skylab in 1974-75.

Life Sciences

The International Microgravity Laboratory-1 carried 29 life sciences experiments and Spacelab-J, the Japanese Spacelab, seven. The United States Microgravity Laboratory-1 (USML-1) mission, although dedicated to microgravity science, supported a series of medical investigations as part of the Extended Duration Orbiter Medical Project.

The longest Space Shuttle mission to date, USML-1 proved to be an excellent laboratory for these investigations. Many of the other Space Shuttle missions also included life sciences experiments.

During the winter of 1992, life sciences experiments were conducted in the most unearthly place on the planet -- Antarctica. NASA and National Science Foundation sponsored several unique science and technology projects developed under a joint effort called the Antarctic Space Analog Program.

NASA also is participating in a cooperative life sciences mission with Russia. Late in December, Russia will launch COSMOS '92 "biosatellite," a recoverable, unpiloted spacecraft that carries plant and animal experiments.

Flight Systems

In March, the ATLAS-1 mission used two Spacelab pallets to conduct investigations into the sun's energy output, the chemistry of the Earth's atmosphere, space plasma physics and astronomy. A core set of six instruments will fly repeatedly to study the interaction of the Sun and the Earth's atmosphere.

In cooperation with the Office of Aeronautics and Space Technology, the division managed NASA's contribution to the national High-Speed Computing and Communications program.

In October, 29 supercomputing proposals were selected to advance substantially how computers can be used to study problems ranging from the environment to the evolution of the universe. These projects will use "parallel processing" computers, machines that use up to thousands of processors to work simultaneously on a problem.

In January, the NASA Science Internet (NSI) helped implement the world's first high-speed computer network link to Antarctica, providing voice and data links between the continental United States and the U.S. base at McMurdo Sound. In November, NSI staff set up the first video link between Antarctica and the United States to transmit images between the Ames Research Center and a remotely operated vehicle maneuvering under ice-covered lakes.

In January, the National Space Science Data Center's Data Archive and Dissemination System became operational. User interest in these electronically available astrophysics and space physics data sets has been high, with recent access rates running at 700 remote user sessions per month.

UNDERSTANDING THE EARTH

In its first full year, NASA's Mission to Planet Earth encompassed three flight programs, a series of ground-based and airborne expeditions and ongoing research and analysis to better understand the Earth as a global environmental system.

TOPEX/POSEIDON

The U.S.-French satellite TOPEX/POSEIDON, launched in August, will help define the relationship between the Earth's oceans and climate. By measuring the sea-surface height with unprecedented accuracy, TOPEX/POSEIDON will provide scientists with global maps of ocean circulation.

The oceans transport heat from the Earth's equator toward the poles, and TOPEX/POSEIDON data will provide a better understanding of how this mechanism works. TOPEX/POSEIDON is a joint mission between NASA and CNES, the French space agency.

LAGEOS II

A passive satellite, the Italian LAGEOS II is covered with reflectors that send laser beams back to the ground stations that sent the beams. Measurements over the years and over wide geographic areas show how the techtonic plates that make up the Earth's crust are moving. Since most earthquakes and volcanoes occur where these plates meet, LAGEOS II will help geologists understand how these cataclysmic events occur and where they are likely to happen.

Earth Observing System

The centerpiece of Mission to Planet Earth, the Earth Observing System (EOS) continued to progress to the launch of its first satellite in June 1998. Internal teams reviewed the program with the goal of reducing funding requirements through FY 2000 by approximately 30 percent while retaining the essence of the instrument complement and science plan.

Ozone Research

Continuing its leading effort in the study of ozone depletion, NASA cooperated with NOAA and other organizations to mount the second Airborne Arctic Stratospheric Expedition from November 1991 through March 1992.

The campaign discovered record-high levels of chlorine monoxide, a key chemical in the ozone depletion cycle, over Eastern Canada and New England. This finding was complemented by data from the Upper Atmosphere Research Satellite (UARS), which observed high concentrations of chlorine monoxide over Europe and Asia.

In the Antarctic, the Total Ozone Mapping Spectrometer, which has been observing global ozone levels for 14 years, indicated the 1992 ozone hole was 15 percent larger in area than any previously seen. Earlier, UARS had observed chemicals involved in ozone depletion in the Antarctic atmosphere as early as June, 3 months before significant ozone depletion begins.

NASA's ozone research expanded with the first of a new series of Space Shuttle missions in April. Titled the ATLAS program, these missions study the sun's energy output and the atmosphere's chemical makeup, and how these factors affect ozone levels. ATLAS' instruments are precisely calibrated before and after flight, providing a check on data gathered by similar instruments on free-flying satellites.

To distinguish natural global change from human-induced change and to understand how humans are changing their environment, Mission to Planet Earth provides scientists with data on how the Earth's large environmental components - air, water, land and life - interact. Several NASA-sponsored airborne and ground expeditions studied these complex relations.

Search and Rescue

NASA's Earth Science and Application program also was involved in a technology test that already has significant down-to-Earth dividends. A hand-held transmitter, used in conjunction with Search-and-Rescue equipment flying aboard NASA-developed weather satellites, allowed rescuers to locate an Alaska hunter immobilized by abdominal cramps on Alaska's largely uninhabited North Slope.

EXPENDABLE LAUNCH VEHICLES

For the fifth consecutive year, NASA's expendable launch vehicles provided 100-percent successful launches. Five expendable vehicles were launched this year.

The first was on June 7, when a Delta 2 placed the Extreme Ultraviolet Explorer, an astrophysics satellite, into low-Earth orbit. On July 3, a Scout placed SAMPEX, a small-explorer class space physics satellite, into low-Earth orbit.

A Delta 2 carried the Japanese Geotail satellite into space on July 24. On Sept. 25, a Titan III lifted the Mars Observer into Earth orbit where the Transfer Orbit Stage (TOS) ignited, sending the spacecraft on to Mars. This was the maiden flight of the TOS. The final launch of the year was on Nov. 21 when a Scout placed a Strategic Defense Initiative Office payload into orbit.

OFFICE OF SPACE FLIGHT

Space Shuttle

This was a banner year for the Shuttle program as it demonstrated its maturity and reliability in the missions flown, a reduction in the program's operational costs, and the addition of significant hardware upgrades that improved the overall system.

In January, the manifest showed eight flights scheduled and at year's end, all eight had been flown. Seven of the eight mission launched on the day set at the flight readiness review and the eighth was 1 day late. The Shuttle system flew so trouble free that two missions were extended for additional science gathering. This year also saw the longest mission ever flown to date, STS-50, which lasted 14 days.

Highlighting the missions conducted was Endeavour's maiden voyage in May on the STS-49 mission. The crew rescued a wayward satellite and in the process, set three new records for space flight - 4 spacewalks on a single mission, the longest spacewalk ever conducted (8 hours, 29 minutes) and the first 3-person spacewalk ever performed.

Three Shuttle missions, STS-42 in January, STS-50 in June and STS-47 in September, carried the pressurized spacelab module. Experiments conducted on those flights previewed the activities that will be undertaken on Space Station Freedom.

The Shuttle system showed its versatility though out the year. In March it served as an orbiting observatory for the STS-45/ATLAS mission. The STS-46 mission in July demonstrated new technology in space with the Tethered Satellite

System payload. Columbia and the STS-52 crew in October showed the orbiter's ability to fly a combination mission as they deployed the LAGEOS satellite and then conducted microgravity research with the United States Microgravity Payload.

The year also saw the last dedicated Department of Defense mission flown by the Shuttle during the STS-53 flight in early December.

Safety remained the Shuttle program's top priority. Space Shuttles Columbia and Discovery completed major structural inspections and modifications. Structural inspections and modifications of Space Shuttle Atlantis, including work to allow it to dock with the Mir Space Station, began in October. When Atlantis returns to flight status in 1993, all of NASA's orbiters will have incorporated modifications to the braking system and drag chutes.

During the year, a detailed budget review resulted in significant cost reductions. The total reduction achieved for fiscal year (FY) 1992 was $368 million or 9 per cent of the FY 1992 baseline budget. A budget reduction plan is in place that will result in over a billion dollars in cost savings in FY 1996, again, as compared to the FY 1992 baseline budget.

A new class of 19 astronaut candidates was named in March. During the year astronauts Vance D. Brand, Bruce E. Melnick, John O. Creighton, Kathryn D. Sullivan, David C. Hilmers, James C. Adamson, James F. Buchli and Daniel M. Brandenstein left the agency.

OFFICE OF SPACE SYSTEMS DEVELOPMENT

Space Station Freedom

Moving ever-closer to the first element launch of Space Station Freedom, 1992 was the year of the critical design review (CDR). CDRs for each individual work package, leading to a design review for the entire human-tended configuration, are on schedule to be completed by June 1993. Completion of the CDR marks the point at which the design is 90 percent completed and the contractor is given authority to proceed with development of the flight hardware.

At the Marshall Space Flight Center, Huntsville, Ala., prime contractor Boeing Defense and Space Group began a series of hardware tests demonstrating how space station components will be joined in orbit. Among the tests were "berthing" tests of a full-size pressurized module to a node. Other tests included thermal and structural loads simulating conditions the hardware will be exposed to in space.

At the Johnson Space Center, Houston, responsible for major space station systems, several milestones were achieved in the Work Package 2 program. Nineteen detailed design reviews examining the JSC-managed space station subsystems have been completed with the remaining 15 scheduled for completion prior to the April 1993 Work Package 2 CDR.

More than 400 pieces of development hardware now exist and 50 percent of prime contractor McDonnell Douglas' development test program is complete. Examples include development of the pre-integrated truss (PIT) segments 1 and 2

used in underwater testing at JSC's Weightless Environment Training Facility which allows the astronauts to conduct critical assessment of orbital replacement unit positioning.

Integrated truss assembly segments S1 and S2 vibroacoustic and thermal vacuum test articles were built and tested for use in assessing structural integrity during launch operations and exposure to the space environment. The propulsion module development unit was constructed and tested under similar conditions and the test article is currently undergoing cold and hot-flow tests at the White Sands Test Facility in New Mexico.

The segment-to-segment attach systems development test was conducted verifying the connections required to join the individual PIT segments on-orbit. In the Data Management System, DMS kits, an integrated set of electronic units functionally equivalent to the station's data management system, were delivered to the Johnson Space Center and to the Kennedy Space Center. Releases of DMS software were delivered to NASA on or ahead of schedule.

At the Lewis Research Center, Cleveland, responsible for the system that supplies Freedom's electrical power, nearly one-half of the critical design reviews for the various components that comprise the Photovoltaic Module and the Power Management and Distribution System were completed. Development testing of the solar array panels and extensive fault current tests also were successfully completed.

"More than 24,000 flight solar cells have been delivered (75 percent of an array) and cell production is proceeding quite well," said Lewis's Space Station Freedom Project Manager Ron Thomas. Battery testing is underway with this year's accumulation giving 3 years of cycle testing on some cells.

In the power management and distribution area, Work Package-4 engineers have completed the first three phases of system tests in the Solar Power Electronics Laboratory at prime contractor Rocketdyne's facility in Canoga Park, Calif. These included steady-state, transient, stability, battery control and communications tests.

In addition to the manufacturing and testing activities, construction began on modifications to Lewis's Power Systems Facility. The modifications are necessary to support the integration, checkout and assembly of the flight hardware before it is shipped to the launch site at the Kennedy Space Center, Fla.

Preparations for on-orbit assembly and maintenance were highlighted by several neutral buoyancy tests of the PV module cargo element mockup as well as robotic tests on replacement of several orbital replacement unit boxes.

In October, Administrator Goldin announced changes to Space Station Freedom management that would "ensure NASA's top talent is working on the program."

Marty Kress, previously the Assistant Administrator for Legislative Affairs, was named Deputy Program Manger for Policy and Management. Tom Campbell was named Chief Financial Officer for Freedom. Campbell had been serving as the NASA Comptroller.

In December, NASA announced plans to consolidate management of the Space Station Freedom program in Reston, Va. "Reston will remain the focal point for the space station program for the foreseeable future," said Associate Administrator for Space Systems Development Arnold Aldrich.

The Space Shuttle continued to play a critical role in paving the way for space station assembly, utilization and operations in 1992.

Four Space Shuttle missions carried up Spacelab hardware, demonstrating human interaction in the conduct of science in space and bridging the gap between the first small steps taken in microgravity research in space started in Apollo to its full-blown maturity on Freedom.

A number of space station precursor research facilities were flown on STS-50, the first United States Microgravity Laboratory, such as a glovebox and a crystal growth furnace. In addition, space station hardware - two foot restraints - were flown for evaluation by USML crew members.

On STS-49, the maiden flight of Endeavour, astronauts Kathy Thornton and Tom Akers performed a space walk to demonstrate assembly techniques for Freedom. The experiment, called Assembly of Station by EVA Methods, or ASEM, evaluated such things as construction techniques and the ability of astronauts to move large, heavy objects around in space.

The first major conference devoted to describing Freedom's capabilities and services to the user community was held in Huntsville, Ala., in August. Administrator Goldin gave the keynote address, calling Freedom "NASA's 10th research facility, as well as well as a national and international program." Goldin challenged NASA to increase the participation by the user community to 200 to 300 real researchers at the next conference.

In Congress, Freedom's future was debated in three separate measures over a 13 month period. In each case, the Congress voted to maintain America's commitment to build the space station and preserve U.S. leadership in space. A final conference bill resulted in NASA's securing $2.1 billion for space station in Fiscal Year 1993, $150 million less than the President's request.

ASRM

In 1992, Congressional direction and budgetary shortfalls were driving factors in the restructuring and termination of two other major activities.

Congress determined that the Advanced Solid Rocket Motor (ASRM) program should proceed but at a reduced level of funding for FY 1993. Consequently, the program was restructured during the year resulting in a 22-month delay for the first launch, now scheduled for December 1998.

During the past year, ASRM facilities design reached 100 percent and construction of facilities passed the 50 percent mark. Construction of case production facilities in Southern Indiana was completed; two of a total of four large ASRM segment transporters were delivered to NASA by the German contractor in December.

NLS

Also in 1992, the Congress voted to terminate the joint NASA/Air Force New Launch System (NLS) which was to have been a new family of vehicles designed to meet both civil and military launch requirements after the turn of the century. $10 million was appropriated to the Air Force for accomplishing the termination; an additional $10 million was appropriated to NASA for continuation of development work, begun under NLS, for a new Space Transportation Main Engine.

AERONAUTICS

In 1992, NASA's aeronautics research took on a higher profile, with major advances in high-speed research, subsonic transports, high-performance aircraft and the creation of a new, separate Office of Aeronautics.

Early in the year, NASA's Lewis Research Center, General Electric Co. and Pratt & Whitney teamed up in a unique government-industry partnership to develop advanced materials for a next-generation U.S. supersonic transport. The 5-year, $88 million effort, part of NASA's High-Speed Research Program, focuses on composite materials for high-temperature, low-emissions engine combustion chambers.

In July, construction began on a high-flying, lightweight unpiloted research aircraft called Perseus that NASA will use to measure ozone levels and gather other atmospheric data for the High-Speed Research Program. When it begins science missions in 1994, Perseus will carry up to 110 pounds (49.5 kilograms) of instruments as high as 82,000 feet (25 kilometers).

The highlight of NASA's subsonic research in 1992 was a dramatic series of flights to evaluate airborne windshear sensors under actual severe weather conditions. NASA's Boeing 737 research plane, based at Langley Research Center, Hampton, Va., tested a laser radar (lidar) system, an infrared sensor and a microwave radar at the Denver and Orlando, Fla. airports. It was the first flight test of the lidar system.

During the year, NASA and the Army began a 5-year program to increase helicopter agility and maneuverability. The effort at NASA's Ames Research Center, Mountain View, Calif., uses a modified UH-60A helicopter as a flying laboratory. The experiments focus on computer software that determines how helicopters respond to pilots' commands, improved navigation systems and pilot displays.

A NASA F-15 based at Ames-Dryden Flight Research Facility, Edwards, Calif., started supersonic flight tests of a Performance Seeking Control system that may make future high-speed aircraft more fuel-efficient and reliable.

In 1992, Dryden also became home to tests with the X-31 Enhanced Fighter Maneuverability aircraft. NASA is part of an international group flying the X-31 to show the value of coupling thrust vectoring (directing engine exhaust flow) with advanced flight control systems to increase maneuverability in nose-high forward flight.

National Aero-Space Plane (NASP)

The nation got a preview of tomorrow's space transportation in June when a 50-foot mockup of the National Aero-Space Plane (NASP) rolled out of its hanger at Mississippi State University, Starkville, Miss. Senior engineering students at the school won the chance to build the mockup in a nationwide competition sponsored by NASA and the Department of Defense (DoD).

NASP is a joint NASA/DoD effort to develop advanced technologies for future vehicles that could take off like an airplane, fly into Earth orbit using supersonic combustion ramjets (scramjets) and minimal rocket propulsion, then return through the atmosphere to land on a runway.

SPACE TECHNOLOGY

NASA's research on space technology in 1992 stressed new methods that robots and humans eventually may use to explore the moon and Mars.

A pair of experiments evaluated telepresence technology that lets a person, wearing a video headset, see remote locations through cameras mounted on a robot. The technology could be used by future astronauts to control robotic explorers on planetary surfaces.

Beginning in October, NASA scientists employed telepresence to direct the mini-sub during explorations of ice-covered Lake Hoare on Antarctica's Ross Island. A 5-person research team studied the physical and biological nature of the lake to obtain clues about organism that may once have lived on Mars.

In June, NASA's Jet Propulsion laboratory, Pasadena, Calif., unveiled Rocky IV, the latest in a series of planetary mini-rovers. Rocky IV is a prototype of a robot that may go to Mars in 1996 as part of the Mars Environmental Survey (MESUR) mission. The 16.5-pound (7.4-kilogram) testbed is helping NASA researchers learn how to integrate planetary landers and their science instruments under Mars-like conditions.

Around the same time, NASA-Langley engineers assembled a large-scale parabolic (double-curve) antenna in a huge water tank at NASA's Marshall Space Flight Center, Huntsville, Ala. The tank's buoyancy simulated the microgravity environment that astronauts must work in while putting together large objects in space. The tests helped to establish assembly times and work procedures for antennas that are too large to fit inside a space vehicle in one piece.

In October, NASA chose 29 supercomputing research proposals that will pave the way for revolutionary advances in Earth and space science. The projects will try to achieve computer capabilities far beyond those of today's machines, allowing

scientists to produce realistic computer models of phenomena such as the interactions of Earth's oceans, air and land masses and the evolution of the universe.

In October, NASA Administrator Goldin announced that the agency's space technology work would be combined with commercial space activities in a new Office of Advanced Concepts and Technology.

ADVANCED CONCEPTS AND TECHNOLOGY

The new Office of Advanced Concepts and Technology (OACT) was established to improve the way in which NASA approaches the development and transfer of advanced technology, as well as the commercialization of space and space technologies.

An interim organizational structure was established and an Organizational Process Action Team was formed to develop an integrated plan for combining the two offices. The team -- comprising personnel from the two offices, as well as other NASA program offices and field installations -- will present its initial recommendations to the NASA Administrator sometime this month.

Commercial Flight Activities

Throughout 1992, OCP sponsored more than 20 commercial payloads aboard the Space Shuttle. In June, OCP participated in the flight of the U.S. Microgravity Laboratory-1 (USML-1) -- aboard STS-50 -- with the Office of Space Science and Applications. Five commercial payloads, consisting of more than 30 investigations in materials, fluids and biological processes, were flown on the record-breaking, 2-week mission.

One USML-1 payload specialist was Dr. Lawrence J. DeLucas, the first scientist from a NASA Center for the Commercial Development of Space (CCDS) to fly aboard the Space Shuttle. Successful results obtained from protein crystal growth experiments conducted during the mission are directly attributable to the involvement of DeLucas.

Forty percent of the proteins flown on the mission produced larger and higher quality crystals than their groundbased counterparts, compared to 20 percent on previous flights. Other commercial investigations on USML-1 provided promising results, including the growth of zeolite crystals; a 98 percent success rate in the flight hardware used to process more than 20 separate biomaterials, biotechnology and life sciences experiments; and successful demonstration of a safe and reliable way of providing water and nutrients to plants for indefinite periods of time in a microgravity environment -- an international first.

In October, four commercial payloads, comprising more than 30 investigations, were flown aboard STS-52 to evaluate a compound being developed to treat osteoporosis; to further study protein crystal growth for drug research and development; to test a furnace to learn more about growing larger and more uniform industrial crystals; and to learn more about how microgravity can aid research in

drug development and delivery, basic cell biology, protein and inorganic crystal growth, bone and invertebrate development, immune deficiencies, manufacturing processes and fluid sciences.

Other commercial experiments were flown aboard the Space Shuttle during 1992 to study the influence of microgravity on the processing of gelled sols; to investigate the physical and chemical processes that occur during the formation of polymer membranes in microgravity; to further investigate and develop the bases for materials processing in space; to study the effects of the low-Earth orbit environment on space structure materials; and to assess the utility of an Electronic Still Camera.

Technology Transfer

1992 marked the 30th anniversary of NASA's Technology Transfer Program, established under congressional mandate to promote the transfer of aerospace technology to other sectors of the U.S. economy.

In January, NASA, as part of a major initiative to upgrade its technology transfer program, established six Regional Technology Transfer Centers (RTTC) to directly serve the commercial sector through the transfer and commercial use of NASA and other federal technologies. The RTTCs, closely aligned with state-level programs, operate as industry-driven catalysts for federal technology transfer throughout their regions.

Also in 1992, the National Technology Transfer Center (NTTC) -- sponsored by NASA in cooperation with other federal agencies -- initiated operations in conjunction with the RTTCs and other technology transfer programs. The RTTCs and NTTC, along with affiliated federal and state programs, now form the basis of the innovative National Technology Transfer Network.

In February, the National Technology Initiative (NTI) was launched by NASA and the Departments of Commerce, Energy and Transportation to spur U.S. economic competitiveness by promoting a better understanding of the opportunities for industry to commercialize new technology advances. The NTI consisted of a series of regional meetings to highlight the federal government's investment in advanced technologies, much of which has commercial potential.

In May, a pair of computer-driven glasses that can help millions of Americans afflicted with certain low vision problems was introduced. The Low Vision Enhancement Project is derived from NASA technology and is a product of NASA's Technology Transfer Program in cooperation with the NASA Stennis Space Center, Miss., and the Johns Hopkins Wilmer Eye Institute, Baltimore, Md.

The third national technology transfer conference and exposition, TECHNOLOGY 2002, took place Dec. 1-3, at the Baltimore Convention Center in Baltimore, Md. Sponsored by NASA, "NASA Tech Briefs" magazine and the Technology Utilization Foundation, the conference featured exhibits from NASA's nine field centers, other government agencies, universities, government research centers and a diverse array of high-tech companies.

Communications and Remote Sensing

In July, NASA selected 30 experiments proposed for inclusion in the Advanced Communications Technology Satellite (ACTS) program. The experiments represent the work of an impressive cross section of industry and academic investigators. Ten experiments also were selected to conduct propagation research at Ka-band.

During the year, the ACTS Experiments Program signed memoranda of understanding with three agencies:

* The National Telecommunications and Information Administration/Institute for Telecommunication Sciences will test and evaluate the ACTS unique capabilities and technology to gain knowledge of advanced communication satellite system performance.

* The Defense Advanced Research Projects Agency is developing a high data rate satellite research testbed network.

* The U.S. Army Space Command will use the ACTS to conduct demonstrations of technology and applications which involve interoperation between ACTS and the Army communications facilities.

Small Business Innovation Research

From December through March 1992, the Small Business Innovation Research (SBIR) Division selected 138 research proposals for negotiation of Phase II contract awards in NASA's SBIR program. Included were 126 small, high technology firms located in 28 states.

The selection of 348 research proposals for negotiation of Phase I contracts in the 1992 SBIR program was announced in November. Proposals selected were submitted by 256 small, high technology firms in 34 states.

EXPLORATION

Early in the year the Office of Exploration conducted a workshop with the Lunar and Planetary Institute in Houston to define the scientific requirements for the first lunar orbital precursor missions. Instruments to fly on these missions were selected based on recommendations and input from the workshop.

In addition, Exploration program officials conducted an in-depth technical study of a First Lunar Outpost concept intended to be the baseline architecture to return humans to the Moon. The program currently is evaluating trade-offs and options for this baseline, which is expected to evolve and be modified before it is flown.

The Office of Exploration also initiated conceptual studies of possible mission scenarios for human exploration of Mars.

INTERNATIONAL

The year 1992 was probably the most active international space cooperation in NASA's history. Highlights included increased cooperation with the Russian Space Agency; the launch of international spacecraft/payloads; flight of foreign payload specialists and an ESA mission specialist on the Space Shuttle and the culmination of the Space Agency Forum on International Space Year activities.

Other highlights of 1992 include:

* Scientists from NASA, the European Space Agency (ESA), the Canadian Space Agency (CSA), the French National Center for Space Studies (CNES), the German Space Agency (DARA) and the National Space Development Agency of Japan (NASDA) cooperated in the International Microgravity Laboratory-1 (IML-l) Space Shuttle STS-42 mission launched on Jan. 22. More than 200 scientists from 16 countries participated in the investigations. Dr. Robert Bondar, M.D. and Ph.D., of the CSA, and Dr. Ulf Merbold of ESA flew as payload specialists.

* The first Atmospheric Laboratory for Applications and Science (Atlas-l), carried 12 instruments and investigations from the United States, France, Germany, Belgium, Switzerland, The Netherlands and Japan. These instruments and investigations studied the chemistry of Earth's atmosphere, solar radiation, space plasma physics and ultraviolet astronomy on board the March STS-45 Space Shuttle mission. Dr. Dirk Frimout, an ESA scientist, flew as the first Belgian payload specialist.

* President George Bush and Russian President Boris Yeltsin signed a U.S./Russian space agreement in June which expanded bilateral cooperation in space science, space exploration, space applications and the use of space technology.

* In July, NASA signed a contract with the Russian firm NPO Energia, focusing on possible use of the Russian Soyuz-TM vehicle as an interim Assured Crew Return Vehicle.

* Geotail, a Japanese built-spacecraft, was launched from the Cape Canaveral Air Force Station, Fla., on a Delta II expendable launch vehicle on July 24, 1992. This joint U.S./Japanese project is the first in a series of five satellites with significant participation from NASA, ESA and Japan to better understand the interaction of the sun, the Earth's magnetic field and the Van Allen radiation belts. Geotail was developed by the Japanese Institute for Space and Astronautical Science, in Sagamihara, Japan.

* The Topex/Poseidon satellite was successfully launched on an Ariane IV launch vehicle from the Guiana Space Center in Kourou, French Guiana on August 10. Topex/Poseidon is a joint NASA/CNES program to study ocean circulation and its role in regulating global climate.

* The July/August STS-46 Space Shuttle mission included the flight of the NASA-Italian Space Agency (ASI) Tethered Satellite System and deployment of the European Retrievable Carrier platform. Dr. Claude Nicollier, ESA mission specialist

and first Swiss astronaut, and Dr. Franco Malerba, ASI payload specialist and the first Italian payload specialist, were members of the crew.

* During the last meeting of the Space Agency Forum on International Space Year (SAFISY) in Washington, D.C., in late August, the participants decided to create a Space Agency Forum as a follow-on to SAFISY. A planning group, including the United States, Japan, Europe, Russia, Canada, Brazil and China, has been formed to work out details for the operation of the proposed new organization, which will hold its first meeting in 1993.

* The 50th Space Shuttle (STS-47) mission launched in September was a joint U.S./Japanese Spacelab mission: 34 Japanese experiments, collectively called Fuwatto '92, were flown on a reimbursable basis and shared the Spacelab module with 7 from the United States and 2 joint experiments. Dr. Mamoru Mohri flew as the first Japanese payload specialist aboard the Shuttle.

* In October, NASA and the Russian Space Agency signed an agreement for the flight of a Russian cosmonaut on the U.S. Space Shuttle, the flight of a U.S. astronaut on the Russian Mir Space Station and a joint mission including the rendezvous and docking of the Space Shuttle with the Mir Space Station. Another agreement also was signed in October for the flight of two U.S./NASA scientific instruments on the Russian Mars '94 mission.

* The STS-52 mission in October included the ASI's Laser Geodynamics Satellite (LAGEOS) II launched on an Italian IRIS upper stage, CSA's CANEX-2 payload and the CNES/French Atomic Energy Commission's Mephisto instrument on the U.S. Microgravity Payload. Steve MacLean flew as a payload specialist and the third Canadian citizen to fly aboard the Space Shuttle.

OFFICE OF SPACE COMMUNICATIONS

Space Network

The on-orbit Tracking and Data Relay Satellite System (TDRSS) provided continuous communications coverage to NASA Space Network customers for up to 85 percent of each orbit, performing at a proficiency in excess of 99.8 percent. A 33 percent increase in Space Shuttle flights, the addition of the Extreme Ultraviolet Explorer (EUVE) and Ocean Topography Experiment satellites, and continued heavy support for the Compton Gamma Ray Observatory and Hubble Space Telescope contributed to the TDRSS's added workload.

In addition, commercial use of the TDRSS C-band resources started, via a lease of those capabilities, to a small business private sector firm.

Since becomming operational in late 1983, TDRSS has relayed approximately 3.5 million minutes of data to the ground, and its resources have been required by every subsequent Space Shuttle mission.

The TDRSS Continuation Program moved closer to the completion of the ground terminal modifications required to maintain Space Network user services and meet the evolving needs for satellite tracking and communications through the first

decade of the 21st Century. Construction of the Second TDRSS Ground Terminal at the White Sands Complex, N.M., was completed and hardware/software integration testing is underway.

Ground Data Systems

The data processing program received and processed over 8 trillion bits of scientific data containing space acquired images and measurements from both free-flyer low Earth-orbiting spacecraft and Shuttle payloads. The captured data was converted to forms the science community could interpret and distributed to world-wide science facilities. With the advent of EUVE and SAMPEX data, a new all-time record of 1 trillion bits of data a month was processed.

OFFICE OF SAFETY AND MISSION QUALITY

Frederick D. Gregory, NASA Astronaut and Colonel, USAF, was named to the position of Associate Administrator. Gregory is responsible for the safety and mission quality for all NASA programs and activities and for the direction of reporting and documentation of problem identification, problem resolution and trend analysis.

The Office of Safety and Mission Quality (SMQ) made significant contributions to the successful operation of this year's Space Shuttle and expendable launch vehicle missions. SMQ provided independent safety oversight, technical assessments, safety assurance engineering, policy development, risk assessment and mishap investigations.

A NASA Mechanical Parts Control Program Implementation Plan was initiated to assure the integrity of NASA spaceflight hardware components critical to protect human lives and programs. The program is based on the Total Quality Management concept and stresses continual improvement of mechanical parts. The program will increase the reliability and quality of NASA hardware, thereby providing assurance necessary to launch crews and vehicles on more lengthy and complex missions.

A Safety, Reliability and Quality Assurance Working Group was established to assure that both NASA's and the USSR's space plans for joint missions and operations will meet all safety, reliability and quality assurance needs. Also, the group is working to get a better understanding of Russian Space programs safety issues, particularly when applied to crewed flights for joint missions. The Working Group participants include representatives from NASA Headquarters, Washington, D.C.; Johnson Space Center, Houston; Kennedy Space Center, Fla.; Marshall Space Flight Center, Huntsville, Ala.; and Rockwell International Corp., Calif.

Over 2500 safety professionals, program personnel, and managers throughout NASA were trained at the newly implemented NASA Safety Training Center.

Established at the Johnson Space Center, training is conducted via satellite or by center visits, with areas of training including Safety Requirements, Payload Safety, Manager Safety, and Occupational Safety and Heath Administration issues.

EDUCATION

During the International Space Year (ISY) kick-off celebration, NASA and the Young Astronaut Council announced an ISY student space art contest, called ***Outer Sight.*** Over 1,800 school children in grades K through 9 entered the competition to capture ISY's spirit of world-wide celebration of space cooperation and discovery by expressing their vision of future space exploration and discovery.

July 22 marked a major milestone for aerospace education by expanding the National Space Grant College and Fellowship Program to include all 50 states, the District of Columbia and Puerto Rico. The addition of Kentucky, Nebraska, Puerto Rico, Vermont and Wyoming, along with their 26 colleges and universities, brings the total number of participating institutions to more than 320 nationwide.

The first student managed and built payload flown on a NASA sounding rocket was launched successfully on Sept. 21, from the NASA Goddard Space Flight Center's Wallops Flight Facility, Wallops Island, Va. The pilot project, known as the Colorado Student Ozone Atmospheric Rocket was developed to demonstrate the use of sounding rocket flight as a valuable educational tool for undergraduate and graduate students.

Coinciding with the historic first flight of an African American female astronaut, Dr. Mae C. Jemison, in September, NASA Administrator Goldin, Congressman Louis Stokes (D-OH), and NAACP Chairman Dr. William Gibson participated in a symposium to expand education and career opportunities for minorities in science, engineering and technology. Over 100 representatives of organizations dedicated to expanding education and career opportunities for underrepresented groups in science, engineering and technology attended.

During STS-52, the Earth-orbiting crew of Space Shuttle Columbia talked with the sea-voyaging crew of the historic Hawaiian canoe Hokule'a on Oct. 28. At the same time, students throughout Hawaii, plotting the course of the canoe's historic voyage, watched the televised conversation. Selected students asked both crews about flight and sail plans, weather, procedures for navigating both vessels and about exploration.

Tens of thousands of students in more than 20 nations interacted with scientists, engineers and astronauts to learn about activities in space exploration and Mission to Planet Earth through a series of satellite video conferences. To observe International Space Year, NASA conducted the first of two live, interactive satellite videoconferences. The first broadcast on Oct. 21 featured "Space Exploration."

FY 1993 NASA APPROPRIATIONS

Under the constraints facing all domestic discretionary programs in 1992, congressional action on NASA's FY 1993 budget request produced a budget for the civil space program lower than FY 1992, marking the first decrease in NASA appropriations (not counting inflation) since 1974. However, given earlier indications that congressional budget cuts in NASA programs would be much deeper, possibly including the deletion of funding for Space Station Freedom, the final congressional outcome for FY 1993 was significantly better than expected.

The FY 1993 VA-HUD-Independent Agencies Appropriations Bill cleared Congress on September 25 and was signed by President Bush on October 5. NASA's funding was set at $14.330 billion, $663 million less than the President's FY 93 request, and a $4 million decrease from FY 92.

Among the most significant issues was the proposed cancellation of the Advanced Solid Rocket Motor (ASRM) program due to budgetary constraints. In the final appropriations bill, however, Congress restored funding for ASRM, $195 million in the Space Flight, Control And Data Communications appropriation and $165 in the Construction Of Facilities appropriation.

Funding for Space Science and Applications in FY 93 is $130 million less than the request, but $127 million above the FY 92 level. Included was funding for the major science projects, including the Earth Observing System, the Advanced X-ray Astrophysics Facility, the Cassini mission and the Shuttle Test of Relativity Experiment/Gravity Probe B. The Comet Rendezvous Asteroid Flyby mission was canceled.

The Space Station Freedom program was extensively debated again this year in both houses of Congress. In the House, floor challenges to the space station were rejected during both the authorization and appropriations debates. In the Senate, an amendment seeking to strike all funding for the space station was defeated. Funding in the amount of $2.1 billion was appropriated, $150 million less than the request.

Twenty-five million dollars was added to the Research and Development appropriation for the High Speed Civil Transport program. The joint NASA/DoD National Aero-Space Plane program received no funding in the NASA budget for FY 93. However, funding was included in the DoD appropriation for continued development.

The joint NASA/DoD New Launch System program was terminated, although funding in the amount of $10 million was appropriated for continued work on new engine development.

Space Shuttle Operations was reduced by $175 million to $2.9 billion to support a planned flight rate of eight Shuttle missions during the fiscal year.

- end -

NASA News

National Aeronautics and
Space Administration

Washington, D.C. 20546
AC 202 453-8400

ISY

Sue Richard
Headquarters, Washington, D.C.
(Phone: 202/358-1400)

For Release

December 22, 1992

RELEASE: 92-229

HARRIS, FREEMAN NAMED HEADS OF NASA OFFICES

NASA Administrator Daniel S. Goldin today announced the appointments of Dr. Wesley L. Harris as Associate Administrator for Aeronautics and Dr. Yvonne Freeman as the Assistant Administrator for Equal Opportunity Programs.

Dr. Wesley L. Harris

Harris, an aeronautical engineer, comes to NASA after serving as Vice President of the University of Tennessee Space Institute, Tullahoma, since 1990. Previously, he was Dean of the School of Engineering at the University of Connecticut, Storrs (1985-90). From 1981 to 1985, he was professor of aeronautics and astronautics at the Massachusetts Institute of Technology in Cambridge (MIT), Cambridge.

"Dr. Harris brings to this critical position an extensive background in aeronautical engineering and management," Goldin said. "It is imperative that NASA move aggressively to help America regain the leading edge in aeronautics. Dr. Harris' appointment is a key step in that effort."

As Associate Administrator for Aeronautics, Harris will be responsible for directing research and technology development efforts in support of America's aeronautics industry. This includes fundamental research in aerodynamics, materials and propulsion, flight tests with advanced aircraft and efforts to improve safety.

From 1979 to 1980, Harris took a leave of absense from MIT to work at NASA as Manager of Computational Methods in the Office of Aeronautics and Space Technology. He was Associate Professor of Aeronautics and Astronautics and of Ocean Engineering at MIT from 1973-79.

- more -

Harris has published more than 100 technical articles. He received a bachelor of aeronautical engineering in 1964 from the University of Virginia (honors) and a Ph.D. from Princeton University in 1968.

Dr. Yvonne B. Freeman

Freeman was Manager of the Minority Science and Engineering Program at NASA's Jet Propulsion Laboratory (JPL), Pasadena, Calif., prior to her appointment as Assistant Administrator for Equal Opportunity.

Before serving at JPL, she was Manager of the Minority University Program at NASA Headquarters (1987-90). In this capacity, she was responsible for planning, developing, managing and monitoring NASA-sponsored programs at historically black colleges and universities. She also reviewed program policies to ensure compliance and equal access by minority institutions.

"Dr. Freeman has an excellent background in equal opportunity programs, particularly in the education area. She knows NASA, and it will be great to have her back at Headquarters," Goldin said. "She shares my deep commitment to developing a NASA workforce that reflects the rich diversity of our society."

Freeman will be responsible for maximizing opportunities for women and minorities throughout NASA, with a particular emphasis on senior management levels. She will lead efforts to recruit and retain employees from under-represented groups in the NASA workforce and strengthen multicultural education efforts within the agency.

At JPL, Freeman was responsible for the design, development and implementation of training and outreach programs to enhance education and opportunities for minorities.

Freeman received a bachelors degree in elementary education from Fisk University, Nashville, Tenn. She was awarded a masters degree from Loyola Marymount University, Los Angeles, and a doctoral degree from the University of Massachusetts, Amherst.

- end -

NASA News

National Aeronautics and
Space Administration

Washington, D.C. 20546
AC 202 453-8400

ISY

Ed Campion
Headquarters, Washington, D.C.
(Phone: 202/453-8536)

George Diller
Kennedy Space Center, Fla.
(Phone: 407/867-2468)

For Release

December 22, 1992

EDITORS NOTE: N92-110

JANUARY 13 SET FOR THE FIRST SPACE SHUTTLE FLIGHT OF 1993

NASA managers today set Jan. 13 as the launch date for the first Shuttle mission of 1993. Designated STS-54, the flight has two primary objectives -- deployment of the Tracking and Data Relay Satellite (TDRS-F) and astronomical observations of invisible x-ray sources within the Milky Way Galaxy with the Diffuse X-ray Spectrometer. A space walk (EVA) to evaluate training methods and gain additional EVA experience also will occur during the mission.

The launch window opens at 8:52 a.m. EST and extends for 2 1/2 hours. The mission duration is planned for 6 days. Landing is scheduled for Jan. 19 at the Kennedy Space Center, Fla.

Commanding the STS-54 mission will be John Casper, making his second flight. Don McMonagle, also making his second flight, will be the Pilot. The three mission specialists for STS-54 are Mario Runco, making his second flight; Greg Harbaugh, making his second flight, and Susan Helms, making her first flight.

- end -

NASA News

National Aeronautics and
Space Administration

Washington, D.C. 20546
AC 202 453-8400

ISY

Charles Redmond/Barbara Selby
Headquarters, Washington, D.C.
(Phone: 202/358-1757 -- 202/358-1983)

Randee Exler
Goddard Space Flight Center, Greenbelt, Md.
(Phone: 301/286-7277)

For Release
December 22, 1992

EDITORS NOTE: N92-111

DANTE ROBOT TO PROVIDE LIVE VIDEO AS IT DESCENDS INTO VOLCANO

Dante, an eight-legged NASA robot, will provide live video of its descent down the steep inner rim to the lava lake of the Antarctic volcano Mt. Erebus during a technology demonstration and science expedition to begin about Dec. 28.

The robot demonstration is a joint NASA and National Science Foundation undertaking using the Antarctic as a demonstration site for robotic exploration development which could be used during future lunar or Martian missions.

The robotic exploration of the live Mt. Erebus volcano will take a minimum of 3 days. Each day, the Antarctic team will transmit five 20-minute live video feeds from cameras mounted atop the robot.

The feeds will be transmitted from Mt. Erebus via NASA's Tracking and Data Relay Satellite-West to the Goddard Space Flight Center, Greenbelt, Md. NASA will issue further media advisories via the Goddard Broadcast News Service (301/286-NEWS) when the dates and times of the feeds are better known.

NASA also will provide commentary on the robot's progress provided by robotics and volcano experts at Goddard. The television feed and commentary will be available both at Goddard and on NASA Select television.

A news operation will be active at the Goddard Visitor Center on Soil Conservation Road during these activities. Media wishing to participate will be able to access Goddard's payload operations activities via closed circuit television. Background materials, both print and video, will be available prior to the first live video feed.

- end -

NASA News

National Aeronautics and
Space Administration

Washington, D.C. 20546
AC 202 453-8400

ISY

Donald L. Savage
Headquarters, Washington, D.C.
(Phone: 202/358-1600)

For Release
December 23, 1992

RELEASE: 92-230

NASA NAMES MINORITY BUSINESS RESOURCE ADVISORY COMMITTEE MEMBERS

NASA Administrator Daniel S. Goldin today announced the names of the Chairman and 23 members selected to serve on the newly-formed NASA Minority Business Resource Advisory Committee.

The committee, comprised of members of the business community, will help NASA identify more small, disadvantaged and women-owned firms which potentially could do business with the space agency. NASA has a goal of awarding 8 percent of its contracts to small disadvantaged businesses (SDBs) by the end of fiscal year 1994.

"This committee will help disprove the notion that there are no high-tech small and disadvantaged businesses. We know they're out there, and we'll find them and nurture them because we want to work with firms that have the desire to reach for the American dream," Goldin said in announcing the committee last September.

The committee's first meeting is tentatively scheduled for Jan. 26, 1993, at NASA Headquarters, Washington, D.C. All regularly scheduled meetings will be open to the public and will be announced in the Federal Register.

Goldin selected Henry Wilfong as Chairman of the committee. Susan Borgo, a NASA Headquarters employee, is the Executive Secretary.

Wilfong is the former Associate Administrator for the U.S. Small Business Administration; a former member of the Presidential Task Force on International Private Enterprise-Agency for International Development, U. S. Dept. of State; and former City Councilman, Pasadena, Calif. He is a Certified Public Accountant and owned a CPA firm from 1963-1983. He currently is President of Wilfong and Co., a small businesses consultant.

- end -

A list containing the names of the committee members is available from the NASA Headquarters Newsroom by calling 202/358-1600. Contact Susan Borgo at 202/358-2085 for information about the committee or upcoming meetings.

NASA News

National Aeronautics and
Space Administration

Washington, D.C. 20546
AC 202 453-8400

ISY

Donald L. Savage
Headquarters, Washington, D.C.
(Phone: 202/358-1600)

For Release
December 23, 1992

RELEASE: 92-231

NASA EXCEEDS SMALL DISADVANTAGED BUSINESS CONTRACTING GOAL

NASA Administrator Dan Goldin today announced that the agency has exceeded its 1992 goal of awarding 6.7 percent of the total value of the agency's prime and subcontracts to small disadvantaged businesses.

Over $865 million was awarded to minority organizations, representing 7.2 percent of the total $12 billion awarded during the last fiscal year. In 1990, NASA developed a plan to meet a goal of awarding 8 percent of the total to small disadvantaged businesses (SDBs) by the end of fiscal year 1994.

"This represents a major step forward to meeting and hopefully, exceeding our 1994 goal in 1993," said Goldin. "We are continuing the momentum by recently setting aside appropriate procurements for SDBs, including women-owned firms, and we are developing an awards program for technical small businesses.

"I have directed top NASA officials to take steps to substantively increase SDB subcontracting in our top 100 contracts. Also, I have made reaching our 8 percent goal a part of the performance evaluations of NASA's associate and assistant administrators and center directors," said Goldin.

Other steps announced today to meet the goal are to direct that contract consolidations which reduce prime awards to SDBs will be made only with the concurrence of NASA's chief of staff and to challenge the Jet Propulsion Laboratory, Pasadena, Calif., to double their SDB subcontracting in FY 1993.

On Dec. 2, NASA announced that $310 million would be set aside under a determinations and findings (D & F) to ensure that NASA reaches the goal. The D & F listed 26 requirements for contracts at NASA centers.

The goal includes small disadvantaged businesses, women-owned businesses, Historically Black Colleges and Universities and minority educational institutions. The congressionally-mandated goal was included in the FY 1990 NASA appropriations bill.

- end -

NASA News

National Aeronautics and
Space Administration

Washington, D.C. 20546
AC 202 453-8400

ISY

Ed Campion
Headquarters, Washington, D.C.
(Phone: 202/453-1134)

George Diller
Kennedy Space Center, Fla.
(Phone: 407/867-2468)

For Release

December 28, 1992
Embargoed until 4 p.m. EST

RELEASE: C92-23

NASA EXTENDS CURRENT KSC BASE OPERATIONS CONTRACT

NASA has extended the current Kennedy Space Center (KSC), Fla., Base Operations Contract held by EG&G Florida, Inc., through Feb. 28, 1993. The contract extension also includes four additional 1-month options.

The approximate amount of the basic 2-month period is $32.9 million dollars. The four 1-month options are collectively valued at 64.4 million dollars.

The base operations contract is a mission contract encompassing management, operation, maintenance and engineering for KSC utilities, facilities, certain technical and administrative operations, and health, fire and security services. These are provided for NASA, its contractors and tenants located primarily at KSC and Cape Canaveral Air Force Station.

This contract extension is for interim support services during the period of time required to resolve protests of the contract's follow-on competitive award to Lockheed Space Operations Co.

- end -

NASA News

National Aeronautics and
Space Administration

Washington, D.C. 20546
AC 202 453-8400

ISY

For Release

Charles Redmond
Goddard Space Flight Center, Greenbelt, Md.
(Phone: 301/286-6256)

December 28, 1992

DANTE ADVISORY

ROBOT AND TEAM ARRIVE SAFELY AT MT. EREBUS BASE CAMP

Dante, an 8-legged NASA Robot, and the twelve member government/university team undertaking the robotic exploration, have arrived safely at the base of the live Antarctic volcano, Mt. Erebus. The team has successfully established telecommunications between themselves and the Goddard Space Flight Center via the NASA Tracking and Data Relay Satellite.

There is the possibility the Antarctic team might be able to transmit at 4:20 p.m. and at 5:30 p.m. EST today video of their preparation activities taped during the past several days.

When Dante begins its descent into the crater of the volcano, the team will provide live video during several 20-minute feeds a day. These feeds will occur during 8:00 am and 4:00 pm. The earliest the team estimates the descent will occur is no sooner than Wednesday, Dec. 30. There is no current estimate of the time of these feeds. Also, local weather is a factor and the team is taking longer than orginally expected to accomplish certain tasks, so the estimate of Wednesday could be early.

The robot's exploration down the steep inner rim of Mt. Erebus to the lava lake of the Antarctic volcano is a technology demonstration and science expedition between NASA and the National Science Foundation. For most of the robot's expected exploration activities, it will be under the local control of the Antarctic team.

-more-

However, portions of the robot exploration will be controlled from a payload control center at Goddard. This will be the longest distance ever for live robotic control and simulates what may be in store for NASA's further exploration activities with humans and robots on Mars. Carnegie-Mellon University and the New Mexico Institute of Mining and Technology are partners with NASA and the NSF as robotics and volcano experimenters.

Robotic exploration of the live Mt. Erebus volcano will take a minimum of 3 days. Each day, the Antarctic team expects to transmit five 20-minute live video feeds from cameras mounted atop the robot or from atop rim of the volcano.

The feeds will be transmitted from Mt. Erebus via NASA's Tracking and Relay Data Satellite West to Goddard. NASA will issue further media advisories when the dates and times of the feeds are known. (Call 301/286-6397 for recorded update information.)

NASA also will provide commentary on the robot's progress provided by robotics and volcano experts at Goddard. The television feed and commentary will be available both at Goddard and on NASA Select Televison.

-end-

NASA News

National Aeronautics and
Space Administration

Washington, D.C. 20546
AC 202 453-8400

ISY

Charles Redmond
Goddard Space Flight Center, Greenbelt, Md.
(Phone: 301/286-6256)

For Release
December 29, 1992

DANTE ADVISORY NO. 2

ROBOT AND TEAM BEGIN VOLCANO ASCENT, LIVE VIDEO FED

The first live video from the Mt. Erebus team in the Antarctic was sent via NASA's Tracking and Data Relay Satellite last night during a telecommunications test between team members on the ice at the foot of the 11,000-foot tall volcanic mountain to robotics team members at the Goddard Space Flight Center, Greenbelt, Md.

Team members had arrived at the base of the volcano Sunday and are in the process of hauling equipment and the 8-legged, 12-foot tall robot Dante and its mobile carrier Geryon up the face of the mountain to the volcano crater rim. The video test included previously recorded hand-held video the team took of their base camp and inspections of the robot. The live feed showed a wind-driven snowy scene with flags at the base camp being blown rigidly straight in the high winds.

The Erebus team expects to feed more taped video today during a TDRS link at 3:45 pm EST. Today's video communications could last 70 minutes. Some complications arose during an earlier attempt to feed video yesterday but were resolved by the time the second test began at 5:30 pm EST. If similar problems arise during today's primary test period, a backup communications test is scheduled at 5:50 pm EST and would last through 6:35 pm EST.

Similar primary and backup video telecommunications tests have been set up for Wednesday, Dec. 30, at 3:30 pm EST and 5:25 pm EST for periods of about an hour. The tests are being used to verify video transmission capabilities from the Antarctic to Goddard.

The tests are part of preparations for the descent of the Dante robot down the inner slope of Mt. Erebus, now set to begin on Thursday, Dec. 31. Local weather in the Antarctic has caused some delays to the team's original schedule and certain tasks are taking longer than anticipated. The ascent up the 11,000 foot slope to the rim of the volcano, for instance, was originally expected to be completed in two days. The team now expects to have all their gear and the robot in place in three days.

-more-

Team Members and All Equipment in Good Shape

Other than weather-induced problems and readjustments to their timetable, all team members are reported to be in good shape and all their equipment, from the robot to the telecommunications and computers necessary for the experiment, have been tested and are in working order.

Should the team be prepared for the operations portion of the demonstration project on Thursday, the video feeds are expected to originate from the video navigation cameras mounted on top of the Dante robot. These live feeds would show the robot's point of view as it navigates slowly down the steep inner slope of the volcano. Thursday feed times have been tentatively set for 12:35 through 1:25 pm EST, 2:10 pm through 3:40 pm, 3:42 pm through 3:57 pm, 4:20 pm through 5:25 pm, 5:50 pm through 6:10 pm, and 7:25 pm through 8:25 pm. During all of these periods, the Erebus team expects to be able to transmit video from the Dante robot as it navigates its way down the slope to the lava lake located in the Mt. Erebus crater.

A similar video support schedule at approximately the same Eastern Standard times is being developed for Friday and Saturday. If all goes according to current plans, Dante is to spend Friday exploring the lava lake in the crater floor of Mt. Erebus to provide geophysical and atmospheric chemistry data about the volcano's outgassing and the composition of the lava lake. The team expects to have Dante climb back up to the rim on Saturday.

Project is Developing Future Exploration Capabilities

NASA and the National Science Foundation are undertaking this demonstration project to develop technology and telecommunications capabilities which NASA could use in future explorations of the Moon or Mars and which the NSF might apply to its ongoing research activities in the Antarctic. Part of the test involves transferring control of the robot from the Mt. Erebus team to team members located at a payload control center at Goddard. This portion of the project will test the "telepresence" capabilities of such robots for future NASA exploration missions.

During the descent, lava lake exploration and ascent phases expected to occur Thursday, Friday and Saturday (Dec. 31, Jan. 1 and 2), NASA will provide commentary on the robot's progress from robotics and volcano experts located at Goddard. The television feed and commentary will be available both at the Goddard news center (in the Visitor Center, Soil Conservation Road) and on NASA Select Television. (Call 301/286-6397 for recorded update information.)

-end-

NASA News

National Aeronautics and
Space Administration

Washington, D.C. 20546
AC 202 453-8400

ISY

Ed Campion
Headquarters, Washington, D.C.
(Phone: 202/453-8536)

Barbara Schwartz
Johnson Space Center, Houston
(Phone: 713/483-5111)

December 30, 1992

For Release

NOTE TO EDITORS: N92-112

STS-53 AND STS-54 SPACE SHUTTLE MISSION BRIEFINGS SET

The STS-53 postflight crew briefing and STS-54 preflight briefings will be held Jan. 6 and 7 at the Johnson Space Center, Houston, building 2, room 135. The TDRS briefing will originate from the Kennedy Space Center and the IUS briefing will originate from the Marshall Space Flight Center. Reporters may cover the briefings at NASA Headquarters or other NASA centers.

A briefing agenda is attached. All briefings will be carried on NASA Select television with two-way audio for questions from participating NASA locations. NASA Select programming is carried on SATCOM F2R, transponder 13, located at 72 degrees west longitude.

-end-

AGENDA
STS-54 PREFLIGHT BRIEFINGS
STS-53 POSTFLIGHT BRIEFING
January 6-7, 1993
ALL TIMES EST

Time	Briefing	Moderator
Wednesday, Jan. 6		
9: 30 a.m.	Mission Overview Phil Engelauf, Lead Flight Director	James Hartsfield
10:30	Physics of Toys Greg Vogt, NASA Hqs. Education Specialist	Barbara Schwartz
11:05	Tracking and Data Relay Satellite-F Charles Vanek TDRS Program Manager	George Diller (Originating from KSC)
11:50	Inertial Upper Stage Sid Soucier Manager, Space Systems Program Office	Jerry Berg (Originating from MSFC)
12:25	Diffuse X-ray Spectrometer Louis Kaluzienski, HQ, Program Scientist Dr. Wilton T. Sanders, Principal Investigator Steven C. "Chris" Dunker DXS Mission Manager University of Wisconsin-Madison	James Hartsfield
2:00 p.m.	Improved Waste Collection System Daniel M. Germany Manager, Orbiter and GFE Projects Office	James Hartsfield
2:35	EVA Briefing Ron Farris, EVA Section Chief Gerry Miller, EVA Flight Controller	James Hartsfield
4:00	STS-53 Postflight Crew Briefing	Barbara Schwartz
Thursday, Jan. 7		
10:00 a.m.	STS-54 Crew Briefing	Barbara Schwartz

NASA News

National Aeronautics and
Space Administration

Washington, D.C. 20546
AC 202 453-8400

ISY

For Release

Charles Redmond
Goddard Space Flight Center, Greenbelt, Md.
(Phone: 301/286-8955)

December 31, 1992

DANTE ADVISORY #3

ROBOT POISED AND READY FOR DESCENT INTO VOLCANO

The 8-legged rappelling robot Dante was being placed into position at the rim of the Antarctic volcano Mt. Erebus late on December 30 in preparation for its descent down the steep slopes on Thursday, Dec. 31. Dave Lavery, the Erebus project manager, said from the Antarctic that the team expected the robot to be actively descending the 70 degree slopes of the inner rim of the volcano by early morning on Thursday.

NASA will provide a live video feed of the Dante robot activities, including the first live transmission from the robot's onboard television camera system, beginning at 8:15 am EST and continuing through 9:00 am.

The live video will continue later Thursday with live feeds showing the robot's point of view as it navigates slowly down the steep slope of the volcano. Thursday video feed times have been set for 12:35 through 1:25 pm EST, 2:10 pm through 3:40 pm, 3:42 pm through 3:57 pm, 4:20 pm through 5:25 pm, 5:50 pm through 6:10 pm, and 7:25 pm through 8:25 pm. All of this video will be available on the NASA Select satellite as it is received by the communications support team at the Goddard Space Flight Center.

During the 8:15 am through 9:00 am EST video period, Dave Lavery and possibly other members of the combined NASA-National Science Foundation-university team at the volcano will provide a live audio commentary of the activity. The video feeds are being transmitted from a remote NASA Tracking and Data Relay Satellite portable station set up on the ice at the team's base hut, several thousand feet below the volcano rim. The audio portion will be transmitted through a communications link through the INMARSAT satellite.

NASA will also provide a commentary from participating robotic and geophysical science team members during the Antarctic video feeds beginning at 12:35 pm EST. The audio commentary will originate from robotic specialists from Carnegie-Mellon University, who built the $2 million robot system for NASA, and from NASA Goddard scientists involved in the geochemical and geophysical science investigations which the robot will perform once it reaches the floor of the crater.

- more -

A similar video support schedule at approximately the same Eastern Standard times is being developed for Friday and Saturday. If all goes according to current plans, Dante is to spend Friday exploring the lava lake in the crater floor of Mt. Erebus to provide geophysical and atmospheric chemistry data about the volcano's outgassing and the composition of the lava lake. The team expects to have Dante begin its climb back up to the rim on Saturday, but that could be delayed by science observations until Sunday.

- end -