Video Advisory

National Aeronautics and
Space Administration

Washington, DC 20546
(202) 358-1600

For Release

Deanna Corridon
Headquarters, Washington, DC
(Phone: 202/358-1733)

October 1, 1996

VIDEO ADVISORY: V96-119

NASA'S "THUNDER" TECHNOLOGY RECEIVES AWARD; MARS PATHFINDER READIED FOR LAUNCH

On Tuesday the NASA TV Video File will feature revolutionary new technology developed by researchers at NASA's Langley Research Center, Hampton, VA, that could reduce the size and improve efficiency from audio speakers to heart pumps. The technology, dubbed "THUNDER," will be honored by Research and Development magazine at the annual "R&D 100 Awards" banquet on October 14.

Scheduled to be shown on NASA TV live at approximately 2:30 p.m. EDT, will be the closing of the last of three "petals on the Sojourner," a small rover that will venture away from NASA's Mars Pathfinder Lander, scheduled for launch in December. The petals, on which the rover is mounted, will not open again until the landing on Mars, scheduled for July 1997.

ITEM #1: ROLLING THUNDER

B-roll of ceramic materials called piezoelectrics which generate mechanical movement when exposed to an electrical current. For more information contact Don Nolan-Proxmire at (202) 358-1983 or Keith Henry at (757) 864-6120.

Video news files air daily at noon, 3, 6, 9 p.m. and midnight EDT.

NASA Television is broadcast on Spacenet 2, transponder 5, channel 9, C-Band, located at 69 degrees West longitude, with horizontal polarization. Frequency will be on 3880.0 megahertz, with audio on 6.8 megahertz.

-end-

VideoAdvisory

National Aeronautics and
Space Administration

Washington, D.C. 20546
(202) 358-1600

For Release
October 2, 1996

Deanna Corridon
Headquarters, Washington, DC
(Phone: 202/358-1733)

VIDEO ADVISORY: V96-120

LIGHTWEIGHT CRYOGENIC INSULATION TESTS, CASSINI PREPARATIONS

On Wednesday the NASA TV Video File will show footage of a new lightweight cryogenic insulation being tested. Developed by researchers at NASA's Langley Research Center, Hampton, VA, the insulation may be used on future reusable launch vehicles. The insulation may play a key role in the next-generation X-33 rocket. Also airing Wednesday will be footage of the Cassini spacecraft being stacked at the Jet Propulsion Lab, Pasadena, CA, in preparation for launch late next year. NASA TV will replay footage of a technology known as THUNDER, which may reduce the size and improve efficiency of everything from audio speakers to heart pumps.

ITEM #1: BURNING COLD
Researchers conduct tests for a new durable, lightweight cryogenic insulation for use on future reusable launch vehicles. *For more information contact Ann Gaudreaux at 757/864-8150*

ITEM #2: CRYOGENIC INSULATION TESTING
B-roll of the X-33 cryogenic fuel tank testing

ITEM #3: INTERVIEW -- KEVIN RIVERS, THERMAL STRUCTURES
Rivers details the cryogenic experiment

ITEM #4: STACKING CASSINI
The Cassini spacecraft being assembleled at the Jet Propulsion Lab. Cassini is set for launch in October of 1997. *For more information contact Douglas Isbell, 202/358-1753*

ITEM #5: REPLAY -- ROLLING THUNDER

Video news files air daily at noon, 3, 6, 9 p.m. and midnight EDT.
NASA Television is broadcast on Spacenet 2, transponder 5, channel 9, C-Band, located at 69 degrees West longitude, with horizontal polarization. Frequency will be on 3880.0 megahertz, with audio on 6.8 megahertz.

-end-

Launius, Roger

From: NASANews
To: press-release-nasa
Subject: NASA Selects Phase II Small Business Projects
Date: Wednesday, October 02, 1996 4:15PM

James Cast
Headquarters, Washington, DC
(Phone: 202/358-1779)

October 2, 1996

RELEASE: 96-196

NASA SELECTS PHASE II SMALL BUSINESS PROJECTS

NASA has selected 170 research proposals for negotiation of Phase II contract awards for NASA's Small Business Innovation Research Program (SBIR). The selected projects, which have a total value of $100 million, will be conducted by 144 small, high-technology firms located in 30 states.

SBIR goals are to stimulate technological innovation, increase the use of small business (including women-owned and disadvantaged firms) in meeting federal research and development needs, and increase private sector commercialization of results of federally funded research.

Phase I project objectives are to determine feasibility of research innovations meeting agency needs. Phase II continues development of the most promising Phase I projects. Selection criteria include technical merit and innovation, Phase I results, value to NASA, commercial potential, and company capabilities. Funding for Phase II contracts may be up to $600,000 for a two-year performance period.

A total of 277 proposals were submitted by SBIR contractors completing Phase I projects that were initiated in 1995.

The SBIR program is managed by NASA's Office of Aeronautics, NASA Headquarters, Washington, DC, and individual SBIR projects are managed by the NASA field centers and the Jet Propulsion Laboratory, Pasadena, CA.

-end-

EDITOR'S NOTE: A printed listing of companies selected for the program is avaliable in the NASA Headquarters Newsroom (Phone: 202-358-1600) and can also be accesssed on the internet at URL:

http://nctn.hq.nasa.gov/nctn/SBIR/SBIR.html

News Release

National Aeronautics and
Space Administration
Washington, DC 20546
(202) 358-1600

For Release

Don Nolan-Proxmire
Headquarters, Washington, DC
(Phone: 202/358-1983)

October 1, 1996

Keith Henry
Langley Research Center, Hampton, VA
(Phone: 757/864-6120)

RELEASE: 96-197

NASA ROLLS OUT AWARD-WINNING "THUNDER"

A NASA technology that could make everything from audio speakers to heart pumps smaller and more efficient has been recognized as one of the 100 most significant technological advancements of the past year.

Dubbed THUNDER, for Thin-Layer Composite-Unimorph Piezoelectric Driver and Sensor, its potential applications could be applied in electronics, optics, jitter (irregular motion) suppression, noise cancellation, pumps, valves and a variety of other fields.

Researchers at NASA's Langley Research Center, Hampton, VA, have taken advantage of a well-known phenomenon exhibited by piezoelectric materials. These materials generate mechanical movement when subjected to an electric current, as in a speaker or actuator, and generate electrical charge in response to mechanical stress, as in certain types of sensors.

The Langley researchers, a multi-disciplinary materials integration team, have succeeded in developing and demonstrating a piezoelectric material that is superior to commercially available piezoelectric materials in several significant ways. It is tougher, more durable, allows lower voltage operation, has greater mechanical load capacity, can be easily produced at a relatively low cost and lends itself well to mass production.

The first generation of THUNDER devices are being fabricated in the lab by building up layers of commercially available ceramic wafers. The layers are bonded using a Langley-developed polymer adhesive. The process results in a prestressed device with significantly improved performance. In addition, the process is controllable and results in highly uniform pieces of hardware.

-more-

In the ideal fabrication process -- which researchers believe is technically feasible -- piezoelectric ceramic materials would be ground to a powder, processed and blended with an adhesive before being pressed, molded or extruded into wafer form. The result would be increased ability to tailor properties, more flexibility in choosing methods of manufacturing and increased amenability toward mass production.

THUNDER wafers could be any practical size from areas of a few square millimeters to several square meters and thicknesses of fractional millimeters to several millimeters.

Memoranda of agreements have been signed with six companies to develop THUNDER technologies and related commercial products. Approximately 15-20 more companies are negotiating agreements.

THUNDER technology will be honored by Research and Development magazine at the annual "R&D 100 Awards" banquet October 14 in Philadelphia, PA. The R&D 100 Award, formerly IR-100, is presented annually by the magazine to the innovators of the 100 most technologically significant new products of the year. Selections are made by a panel of scientists and engineers after studying new technologies from around the globe. Langley has competed in the program for 27 years and has earned 31 awards.

- end -

NASA press releases and other information are available automatically by sending an Internet electronic mail message to domo@hq.nasa.gov. In the body of the message (not the subject line) users should type the words "subscribe press-release" (no quotes). The system will reply with a confirmation via E-mail of each subscription. A second automatic message will include additional information on the service. NASA releases also are available via CompuServe using the command GO NASA.

Video Advisory

National Aeronautics and
Space Administration

Washington, DC 20546
(202) 358-1600

For Release
October 3, 1996

David E. Steitz
Headquarters, Washington, DC
(Phone: 202/358-1730)

VIDEO ADVISORY: V96-121

FIRST IMAGES OF OCEAN SURFACE WINDS FROM NEW SATELLITE

On Thursday the NASA TV Video File will show animation, images and an interview highlighting the first results from the NASA Scatterometer (NSCAT) instrument aboard Japan's Advanced Earth Observing Satellite (ADEOS). NSCAT was launched aboard ADEOS last August and sent back these first images in September showing ocean surface wind speeds as well as dramatic views of Typhoons Tom and Violet. Following the NSCAT package, NASA TV will replay features on a new cryogenic insulation for next generation launch vehicles as well as the stacking of the Cassini spacecraft in preparation for launch in October 1997. For more information on NSCAT please contact Doug Isbell at 202/358-1753.

ITEM #1: PACIFIC FIRST WIND
First images of winds over oceans taken by NSCAT show two typhoons in the northwest Pacific Sept. 20
ITEM #2: WEST PACIFIC FIRST WIND
Animation shows ocean surface wind speed and directions over west Pacific
ITEM #3: TYPHOONS TOM AND VIOLET
Animation shows Typhoons Tom and Violet on Sept. 20
ITEM #4: FOUR WIND FIELDS
Four images show series of wind fields over two day period (Sept. 20-21)
ITEM #5: NSCAT PACIFIC MAP
Images show ocean surface and wind speeds from Sept. 21
ITEM #6: GLOBAL WIND SPEED
Map shows global three-way average of wind speeds over the world's oceans
ITEM #7: NSCAT ANIMATION
NSCAT gives forecasters better information to predict storm behavior
ITEM #8: ADEOS LAUNCH
Replay of ADEOS launch from August 16
ITEM #9: INTERVIEW -- JIM GRAF, NSCAT PROJECT MANAGER
Graf discusses first images returned by NSCAT

Video news files air daily at noon, 3, 6, 9 p.m. and midnight EDT.

NASA Television is broadcast on Spacenet 2, transponder 5, channel 9, C-Band, located at 69 degrees West longitude, with horizontal polarization. Frequency is on 3880.0 megahertz, with audio on 6.8 megahertz.

-end-

News Release

National Aeronautics and
Space Administration

Washington, DC 20546
(202) 358-1600

For Release

October 3, 1996

Douglas Isbell
Headquarters, Washington, DC
(Phone: 202/358-1753)

Mary Hardin
Jet Propulsion Laboratory, Pasadena, CA
(Phone: 818/354-5011)

Patricia Viets
NOAA/National Environmental Satellite, Data, and Information Service, Suitland, MD
(Phone: 301/457-5005)

Hideo Hasegawa/Hiroyuki Ikenono
National Space Development Agency of Japan, Tokyo
(Phone: 81-3-5470-4127)

RELEASE: 96-198

FIRST WIND DATA FROM SCATTEROMETER CAPTURES PACIFIC TYPHOONS

The first images of winds over the oceans taken by the NASA Scatterometer (NSCAT) science instrument onboard Japan's Advanced Earth Observing Satellite (ADEOS) show two typhoons in the northwest Pacific Ocean as they were seen on September 20.

Typhoon Violet eventually ran into the coast of Japan, killing several people and causing severe property damage. Typhoon Tom was observed in the open ocean east of Japan. The scatterometer measured winds in the storms at about 60 miles per hour.

"We are very pleased with the quality of these first images," said Jim Graf, NSCAT project manager at NASA's Jet Propulsion Laboratory (JPL), Pasadena, CA. "These images are typical of the operational data that will be generated using NSCAT and then made available to meteorologists all over the world. NSCAT will provide regular measurements of ocean surface wind speeds from space, which will enhance the ability of weather forecasters to predict the behavior of storms such as Typhoon Violet. In addition, Earth science researchers will use NSCAT data to better understand climate changes occurring on our planet."

The scatterometer takes 190,000 wind measurements per day, mapping more than 90 percent of the world's ice-free oceans every two days. The instrument will provide more than 100 times the amount of ocean wind information currently available from ship reports. Since the scatterometer is a radar instrument, it is capable of taking data day or night, regardless of sunlight or weather conditions.

-more-

"This preliminary analysis of the first set of NSCAT data clearly demonstrates that the high resolution of the NSCAT instrument improves the monitoring of severe storms, such as typhoons. It also shows that the repeated global coverage provides a better description of atmospheric circulation over the oceans, which has not been adequately sampled in the past, and it contributes to a better understandng of air-sea interactions," said Dr. W. Timothy Liu, NSCAT project scientist at JPL.

Information gathered by the scatterometer is being used by the National Weather Service, an office of the National Oceanic and Atmospheric Administration (NOAA), and the Japanese Meteorological Agency. NOAA processes the data from the scatterometer and distributes related products to researchers around the globe. The ocean surface wind measurements, used in numerical computer models, will help weather forecasters more accurately predict the path and intensity of hurricanes, winter storms and other weather systems that form over the oceans.

ADEOS is an international global change research mission of the National Space Development Agency of Japan (NASDA), which includes instruments from the United States, Japan and France, with investigators from many other countries. The satellite is a key part of an international environmental research effort that includes NASA's Mission to Planet Earth (MTPE) program, a long-term, coordinated research effort to study the Earth as a global environmental system. The goal of MTPE is to develop a better scientific understanding of natural environmental changes and to distinguish between natural and human-made changes and impacts.

MTPE-related data, which NASA distributes to researchers worldwide, is essential to helping people make better informed decisions about the environment. NSCAT data will be distributed by NASA and NASDA.

The Jet Propulsion Laboratory developed, built and manages the NSCAT instrument for NASA's Office of Mission to Planet Earth, Washington, DC.

-end-

NOTE TO EDITORS: Copies of NSCAT images may be obtained by calling the Jet Propulsion Laboratory at 818/354-5011. Animation of the typhoons is available October 3 and 4 on the NASA TV Video File, which airs daily at noon, 3, 6, 9 p.m. and midnight EDT.

NASA Television is broadcast on Spacenet 2, transponder 5, channel 9, C-Band, located at 69 degrees West longitude, with horizontal polarization. Frequency is on 3880.0 magahertz, with audio on 6.8 megahertz.

News Release

National Aeronautics and
Space Administration

Washington, DC 20546
(202) 358-1600

Douglas Isbell
Headquarters, Washington, DC
(Phone: 202/358-1547)

For Release
October 4, 1996

Ray Villard
Space Telescope Science Institute, Baltimore, MD
(Phone: 410/338-4514)

NOTE TO EDITORS: N96-61

HUBBLE TAKES RARE PORTRAIT OF JUPITER AND IO

NASA'S Hubble Space Telescope has taken a rare joint portrait of Jupiter and its volcanically active moon Io, as the moon passes above the turbulent clouds of the giant gas planet.

The image, taken on July 24 by the Wide Field Planetary Camera 2, is one of a series of images of Io being taken by Hubble to complement close-up images of Jupiter currently being taken by NASA's Galileo spacecraft, now in orbit around the planet. The first images of Io from Galileo have shown active volcanic plumes and obvious surface changes since the two Voyager spacecraft imaged the moon during their Jupiter flybys in 1979.

The conspicuous black spot on Jupiter visible in the crisp black-and-white image is Io's shadow. The shadow, about the size of Io (2,262 miles across), sweeps across the face of Jupiter at 38,000 miles per hour as the moon orbits 261,600 miles overhead. The smallest details visible on Io and Jupiter are about 100 miles across. Bright patches visible on Io are regions of sulfur dioxide frost. Io is roughly the same size as Earth's Moon.

Though the images from Galileo show much finer detail, Hubble provides complementary information because it can observe Io at ultraviolet wavelengths not seen by Galileo. Hubble also can observe Io at different times than Galileo, and can view Io under more consistent viewing conditions.

Image files in GIF and JPEG format and captions may be accessed on the Internet via anonymous ftp from:

ftp.stsci.edu in /pubinfo:

		GIF	JPEG
PRC96-30	Jupiter and Io	gif/iotrans.gif	jpeg/iotrans.jpg

A higher resolution digital version (300 dpi JPEG) of the image is available in:
/pubinfo/hrtemp: 96-30.jpg.

GIF and JPEG images, captions and press release text are available via World Wide Web at
http://www.stsci.edu/pubinfo/PR/96/30.html and via links in:
http://www.stsci.edu/pubinfo/Latest.html or
http://www.stsci.edu/pubinfo/Pictures.html

-end-

News Release

National Aeronautics and
Space Administration

Washington, DC 20546
(202) 358-1600

Don Nolan-Proxmire
Headquarters, Washington, DC
(Phone: 202/358-1983)

John Bluck
Ames Research Center, Mountain View, CA
(Phone: 415/604-5026)

For Release
October 7, 1996

NOTE TO EDITORS: N96-62

NASA TO SPONSOR 'NETDAY & BEYOND' VIRTUAL CONFERENCE

NASA's K-12 Internet Initiative will conduct a virtual conference, from 11 a.m. to 5 p.m. EDT, on Saturday, Oct. 12, that will allow people from across the globe to participate in on-line, interactive events via the Internet. In order to participate, individuals will need access to the Internet via a graphical Web browser and a minimum of a 14.4 Kbps modem connection.

Titled "NetDay & Beyond," the information will focus on the kinds of resources that are available for teachers and students on the Internet and will explore technical issues which arise as school sites maintain and utilize an Internet connection. These scheduled events will enhance the volunteer NetDay96 effort to wire the nation's K-12 classrooms to the Internet during the month of October.

To make "NetDay & Beyond" possible, the NASA K-12 Internet Initiative is partnering with the Global Learning and Observations to Benefit the Environment (GLOBE) Program and NetTEAM96. GLOBE is a worldwide network of students, teachers, and scientists working together via the Internet to study and understand the global environment. NetTEAM96 is a consortium of nine high technology companies working together to help schools throughout the nation get wired to the Internet.

"NetTEAM96" includes AppleComputer, Asante Technologies, Cisco Systems, Farallon Communications, NETCOM, Netscape, Spyglass/SurfWatch, 3Com and U.S. Robotics. The consortium provides ongoing product and service donations, price discounts and technical expertise to NetDay96 participants.

NASA's K-12 Internet Initiative is a project dedicated to assisting educators in connecting to and utilizing the Internet. During the virtual conference, "Sharing NASA" projects will be featured. These projects allow students to experience the excitement of authentic scientific and engineering pursuits through on-line interactions with people in these careers.

-more-

The conference will consist of three simultaneous "tracks." The tracks will contain a series of chats, on-line presentations accompanied by audio recordings, and a track devoted to airing on-line K-12, Internet-related videos.

Track 1 is a content-oriented program that will introduce participants to on-line educational resources such as the GLOBE Program and "Sharing NASA" and will allow them to interact with GLOBE and NASA scientists.

Track 2 will consist of six one-hour discussions addressing technical issues related to maintaining a network and an Internet connection. This track will feature technical experts from NetTEAM96 consortium members, NASA and GLOBE.

Track 3 will feature videos produced by the K-12 Internet Initiative, GLOBE, and the NetDay96 organizers. These videos demonstrate how to connect to the Internet and some of the curricular benefits offered by its resources.

To access the virtual conference on the World Wide Web, the URL is:
http://quest.arc.nasa.gov/netday96

-end-

NASA press releases and other information are available automatically by sending an Internet electronic mail message to domo@hq.nasa.gov. In the body of the message (not the subject line) users should type the words "subscribe press-release" (no quotes). The system will reply with a confirmation via E-mail of each subscription. A second automatic message will include additional information on the service. NASA releases also are available via CompuServe using the command GO NASA.

News Release

National Aeronautics and
Space Administration

Washington, DC 20546
(202) 358-1600

Beth Schmid
Headquarters, Washington, DC
(Phone: 202/358-1760)

For Release
October 7, 1996

RELEASE: 96-199

NASA ANNOUNCES WINNING EPSCOR STATES

NASA has selected South Carolina, Kansas, Oklahoma, and Nebraska to each receive three-year, $500,000 annual awards to enable them to develop Earth science, space science and applications, aeronautical and space research and technology programs.

The selection is part of NASA's Experimental Program to Stimulate Competitive Research (EPSCoR). The program is designed to assist states in developing an academic research enterprise directed toward long-term, self-sustaining, nationally competitive capability that will help contribute to the state's economic viability in the future.

Of the 14 proposals submitted, these four states were selected after a thorough peer review process involving NASA, university and industry experts.

The states eligible to apply for this award were those designated by the National Science Foundation (NSF) as eligible for the NSF EPSCoR and/or those states currently designated as Capability Enhancement grantees in NASA's National Space Grant College and Fellowship Program.

NSF established EPSCoR in 1979 in response to congressional concerns that federal research and development efforts were supporting only a handful of states. A decade later, in 1990, Congress began the process of expanding EPSCoR beyond NSF. Consequently, NASA and the Departments of Agriculture, Energy and Defense, the Environmental Protection Agency and the National Institutes of Health, have implemented EPSCoR programs. NASA's EPSCoR program began in 1994.

As part of the Agency's Education Division, Washington, DC, NASA's EPSCoR program was conceived to improve a state's competitive research capacity in areas relevant to the agency's mission. NASA's EPSCoR goals are to contribute to a stronger science and technology base, broaden geographic participation of technologically sophisticated businesses and industries while supporting a more competitive national economy, strengthen science education and expand science and engineering training opportunities, particularly for women and minorities, and reinforce the importance of supporting science and technology.

-end-

News Release

National Aeronautics and
Space Administration
Washington, DC 20546
(202) 358-1600

Jim Cast
Headquarters, Washington, DC
(Phone: 202/358-1779)

Lanee Cobb
Stennis Space Center, MS
(Phone: 601/688-1957)

For Release
October 7, 1996

RELEASE: 96-200

NASA-DEVELOPED ANTI-FIRE DEVICE SOON TO BE AVAILABLE TO FIREFIGHTERS

Through an exclusive patent licensing agreement with NASA, a company in Buffalo, NY, will manufacture and market a fire imager device that will aid firefighters to see invisible flames and help them navigate through smoky buildings.

Called FIRESCAPE, the device can image the invisible flames of alcohol and hydrogen fires during the daytime as well as see through smoke. It also can find the origin of visible fires. The company, called SafetySCAN, which specializes in fire safety electronic products, will make the device the first affordable commercial product for fire imaging. The company hopes to have it available to U.S. fire departments by the spring of next year.

"SafetySCAN has a very compatible product line that is already targeted to the fire fighting industry. This allows for easy incorporation of NASA fire imager technology, said Brenda Smith, from Stennis' Technology Transfer Office.

Used like binoculars, FIRESCAPE has no moving parts exposed to the environment. Optics are sealed within a case to protect them from smoke and grit. Also, the device is operational in less than five seconds and can be used for two hours continuously without recharging. It also can withstand the rigors of industrial and fire service.

Firefighters who deal with hydrogen or alcohol fires typically have to rely on an antiquated "broom method" to locate invisible flames. This method involves holding out a corn straw broom, like that used to sweep a kitchen or porch, waving it around an area and hoping it catches fire first. Using FIRESCAPE, firefighters will now be able to remain at a safe distance and forgo risky methods of finding invisible fires.

-more-

In addition to safety, two of the primary benefits of using the fire imager are the simple operation of the device and the low purchase cost of $5,000 per unit. The fire imager is easy to operate with a push button on/off switch and a button to compensate for sunny and cloudy conditions.

The device was originally developed by two engineers at NASA's John C. Stennis Space Center, MS for use with fighting hydrogen and alcohol fires, which have invisible flames in daylight due to their clean-burning chemical makeup. Since Stennis uses more than one million gallons of hydrogen per month in its rocket engine testing programs, the engineers realized the desperate need for locating invisible hydrogen fire flames.

The engineers drew on their experience in thermal imaging technology to develop the device. Thermal imaging is used at NASA's Kennedy Space Center, FL, for ice detection on the Space Shuttle, as well as on filtered cameras used for rocket engine plume diagnostics.

There are currently thermal imagers on the market for fire department usage, which are more expensive. In addition, this thermal technology causes problems for firefighters who are not familiar with the device since they may not be able to read writing on walls or distinguish easily between a window and a picture frame.

"There was a huge gap in technology between the $3 broom and the $30,000 thermal imagers," said Heidi Barnes, one of the engineers who originally developed the device. "Firefighters need a reliable but economical device to assist them in their work. The technology was there. It has just been a matter of developing something relatively simple to use and get it out there to them."

Harvey Smith, the other engineer who developed the device, said they are still exploring other possible applications of the fire imager for fire departments, such as finding smoldering embers in forest fires.

-end-

NASA press releases and other information are available automatically by sending an Internet electronic mail message to domo@hq.nasa.gov. In the body of the message (not the subject line) users should type the words "subscribe press-release" (no quotes). The system will reply with a confirmation via E-mail of each subscription. A second automatic message will include additional information on the service. NASA releases also are available via CompuServe using the command GO NASA.

News Release

National Aeronautics and
Space Administration
Washington, DC 20546
(202) 358-1600

For Release

Don Nolan-Proxmire
Headquarters, Washington, DC
(Phone: 202/358-1983)

October 8, 1996

Fred Brown
Dryden Flight Research Center, Edwards, CA
(Phone: 805/258-2663)

Catherine Watson
Langley Research Center, Hampton, VA
(Phone: 804/ 864-6122)

RELEASE: 96-201

FLIGHT EXPERIMENT SMOOTHES FLOW OVER SUPERSONIC WING

In a series of flight tests, NASA engineers have smoothed the flow over the surface of an aircraft flying at supersonic speeds. These tests will lead to the development of surfaces that will greatly restrict the drag of airborne airplanes and thus significantly reduce the cost of flying on commercial airlines.

"Supersonic laminar flow control has been called the 'holy grail' of aerodynamics, because it's the last frontier that can offer significant drag reductions and save airlines, and eventually the flying public, a great amount of money. This brings to a successful conclusion a historic achievement in high-speed aerodynamics," said Jeffrey Lavell, project manager of the F-16XL Supersonic Laminar Flow Control (SLFC) experiment at NASA's Langley Research Center, Hampton, VA.

As an aircraft flies, the friction between the air and the wing creates drag, or resistance, called skin friction drag. Skin friction drag accounts for about half of the total drag on an aircraft. When airflow over the wing becomes turbulent and separates from the wing, skin friction drag increases. Laminar flow, a condition where the airflow over the wings remains smooth and close to the wing, greatly reduces skin friction drag. Smooth, or laminar, flow over a wing can reduce drag and contribute to reduced operating costs by improving fuel consumption and lowering aircraft weight.

-more-

The objective of the flight tests, part of NASA's High-Speed Research (HSR) program, was to demonstrate that laminar flow could be achieved over a significant portion of a supersonic wing. "We've had terrific results," Lavell said. "We've obtained a large amount of data that can be used to refine our design codes and provide the U.S. aircraft industry with the means to design SLFC wings."

This successful method of maintaining laminar flow could be incorporated into the design of a future High-Speed Civil Transport (HSCT), a conceptual supersonic airliner of the future that would carry 300 passengers at 2.4 times the speed of sound.

Flights with the SLFC experiment at NASA's Dryden Flight Research Center, Edwards, CA, used an F-16XL, which has a large delta wing. The wing's shape is similar to the design that likely will be used on the HSCT, making the F-16XL an excellent testbed for the laminar flow research project.

A large, titanium panel, perforated with more than ten million laser-cut holes, was attached to the upper surface of the F-16XL's left wing. Natural aerodynamic drag on an aircraft wing is caused by the friction of a thin turbulent layer of air moving across the wing's surface. During research flights, a suction system pulled a portion of that thin layer of air through the glove's porous surface to keep the airflow over the wing from becoming turbulent.

Without any means of control, the flow over a highly-swept supersonic wing is laminar for only a few inches. By perforating the skin of the glove and providing suction through the perforations, the airflow can remain stable and laminar flow can be extended over most of the wing.

NASA flew approximately 40 flights over a 12-month time span, and achieved "a significant amount of laminar flow," according to Lavell. Most of the research flights were at speeds of Mach 2 (approximately 1,400 mph) and altitudes of 35,000 to 55,000 feet, which is close to the proposed range for the future HSCT.

The HSR SLFC experiment represents a collaborative effort between NASA and the U.S. aerospace industry. A team composed of Boeing, Rockwell and McDonnell Douglas designed the wing panel and suction system. The panel was assembled at a Boeing facility in Seattle, WA, while the suction system was fabricated by McDonnell Douglas, Long Beach, CA.

NOTE TO EDITORS: A laminar flow fact sheet (FS-1996-09-17-LaRC), a graphic of the SLFC concept and video b-roll are available by calling Langley at (804) 864-6122. Photos of the F-16XL aircraft are available by calling Dryden at (805) 258-2665. A photo also is available from the NASA Headquarters Imaging Branch at (202) 358-1900 (Color photo number: 96-HC-573, Black and White photo: 96-H-573).

- end -

News Release

National Aeronautics and
Space Administration
Washington, DC 20546
(202) 358-1600

For Release

October 8, 1996

Jim Cast
Headquarters, Washington, DC
(Phone: 202/358-1779)

Dom Amatore
Marshall Space Flight Center, Huntsville, AL
(Phone: 205/544-0031)

RELEASE: 96-202

ENVIRONMENTAL IMPACT STATEMENT PROCESS BEGINS FOR TEST FLIGHTS OF X-33 TECHNOLOGY DEMONSTRATOR, PUBLIC MEETINGS SCHEDULED

NASA Monday published in the Federal Register a Notice of Intent (NOI) to prepare an Environmental Impact Statement (EIS) for the development and testing of the X-33 Advanced Technology Demonstrator. As part of the process, NASA plans to hold public meetings to gather comments for the EIS on proposed flight operations, takeoff and landing sites.

The 273,000 pound, wedge-shaped X-33 is a prototype launch vehicle being developed under a cooperative agreement with NASA by Lockheed Martin Skunk Works, Palmdale, CA. The vehicle is part of NASA's Reusable Launch Vehicle program.

As many as 15 flight tests of the X-33 are planned to originate from Edwards Air Force Base, CA, and land at sites in Southern California, Utah, and Montana or Washington beginning in early 1999. The proposed short-range landing sites under study are Silurian Lake, CA, and China Lake Naval Weapons Center, CA. The midrange landing site under study is Michael Army Air Field at Dugway Proving Ground, UT. The long-range landing sites under study are Moses Lake, WA, and Malmstrom Air Force Base, MT.

Affected agencies and the public are encouraged to offer input to help identify and define any issues to be addressed in NASA's EIS analyses. The results of the analyses will be used in the decision-making process regarding the flight test program.

The EIS is being prepared in compliance with the National Environmental Policy Act (NEPA) of 1969, the Council on Environmental Quality Regulations for Implementing the Procedural Provisions of NEPA, and NASA policy and regulations.

-more-

The formal public comment period ends November 29, 1996, however, NASA will accept comments relevant to the analysis throughout the EIS Process, which is expected to conclude in September 1997.

Written comments for inclusion in the final EIS may be mailed to:
Dr. Rebecca C. McCaleb, Director, Environmental Engineering and Management Office, Code AE01, Marshall Space Flight Center, AL 35812.

Comments may be forwarded for the EIS by faxing to 205/544-8259, or Emailing to:
x33eis@msfc.nasa.gov

Comments also may be provided by calling 1-800-833-0678 and leaving a message on the recording machine. NASA environmental officials will make their best effort to transcribe verbal comments -- however, they cannot guarantee the same accuracy as comments received in writing.

The text of the NOI (Notice 96-118) can be accessed along with general information about the X-33 program at:

http://rlv.msfc.nasa.gov

The environmental documents also will be available for review at regional repositories listed in the NOI. A schedule of the public meetings follows on the next page.

X-33 Public Meeting Schedule

Helena, MT
7 p.m. Monday, Oct. 21, 1996
Social Rehabilitative Services Auditorium
Sanders Avenue
(406) 444-3912

Great Falls, MT
6 p.m. Tuesday, Oct. 22, 1996
Great Falls High School
1900 Second Ave. S.
(406) 791-2167

Moses Lake, WA
7 p.m. Thursday, Oct. 24, 1996
Washington State National Guard Armory
6500 32nd Ave. N.E.
(509) 766-2551

Dugway, UT
7 p.m. Monday, Oct. 28, 1996
Post Theater
Dugway Proving Ground
(801) 831-3708

Tooele, UT
7 p.m. Tuesday, Oct. 29, 1996
Tooele Senior Center
59 E. Vine St.
(801) 882-2870

Salt Lake City, UT
7 p.m. Wednesday, Oct. 30, 1996
Airport Quality Inn
5575 W. Amelia Earhart Drive
(801) 537-7020

Lancaster, CA
7 p.m. Tuesday, Nov. 12, 1996
Best Western Antelope Valley Inn
44055 N. Sierra Highway
(805) 918-4651

Ridgecrest, CA
7 p.m. Wednesday, Nov. 13, 1996
Carriage Inn
901 N. China Lake Blvd.
(619) 446-7910

Boron, CA
7 p.m. Thursday, Nov. 14, 1996
West Boron Elementary School
12300 Del Oro
(619) 762-5430

Barstow, CA
10 a.m. Saturday, Nov. 16, 1996
Holiday Inn
1511 E. Main St.
(619) 256-5673

- end -

News Release

National Aeronautics and
Space Administration

Washington, DC 20546
(202) 358-1600

For Release

Ed Campion
Headquarters, Washington, DC
(Phone: 202/358-1778)

October 9, 1996

Rob Navias
Johnson Space Center, Houston, TX
(Phone: 713/483-5111)

NOTE TO EDITORS: N96-63

STS-79 ASTRONAUTS TO ADDRESS JSC EMPLOYEES THURSDAY

On Thursday the STS-79 astronauts will present their traditional post-flight briefing to employees at the Johnson Space Center (JSC), Houston, TX. Due to the high interest in Dr. Shannon Lucid's mission, this briefing, part of the formal debriefing process for every returning Shuttle crew, will be carried live on NASA TV at 5 p.m. EDT. Although there will be no opportunity for questions from reporters at this event, a date for a post-flight news conference for Dr. Lucid is being arranged and will be announced in the near future.

During the STS-79 mission, Space Shuttle Atlantis performed the fourth docking mission with the Russian Mir space station. Dr. Lucid set a U.S. single space flight endurance record of 188 days in orbit before being replaced by American astronaut John Blaha. During STS-79 the Atlantis astronauts conducted microgravity and life sciences experiments in the SPACEHAB module, housed in the Shuttle's cargo bay. STS-79 represented continuing international cooperation between the United States and Russia, and helped prepare for the assembly of the International Space Station.

NASA Television is broadcast on Spacenet 2, transponder 5, channel 9, C-Band, located at 69 degrees West longitude, with horizontal polarization. Frequency will be on 3880.0 megahertz, with audio on 6.8 megahertz.

-end-

News Release

National Aeronautics and
Space Administration

Washington, DC 20546
(202) 358-1600

Don Nolan-Proxmire
Headquarters, Washington, DC
(Phone: 202/358-1983)

For Release
October 9, 1996

Keith Henry
Langley Research Center, Hampton, VA
(Phone: 804/864-6120)

Fred Brown
Dryden Flight Research Center, Edwards, CA
(Phone: 805/258-2663)

RELEASE: 96-203

NASA SEEKS INDUSTRY PROPOSALS FOR HYPERSONIC FLIGHT RESEARCH VEHICLES

NASA is poised to begin a multi-year hypersonic flight-test program by requesting proposals from industry for the fabrication of four unpiloted research aircraft that will fly up to ten times the speed of sound. The contract award is scheduled for early 1997.

The selected contractor will be responsible for fabrication and flight-test support of the hypersonic experimental research vehicles to be called "Hyper-X." Each of the four vehicles will be approximately 12 feet long with a wing span of about five feet. Hypersonic speed is defined as above Mach 5, which is equivalent to about one mile-per-second, or approximately 3,600 miles per hour at sea level.

The Hyper-X Phase I program -- an agency-wide effort to address one of the greatest aeronautical research challenges -- is conducted jointly by NASA's Langley Research Center, Hampton, VA, and NASA's Dryden Flight Research Center, Edwards, CA. Program managers hope to demonstrate technology that could ultimately be applied in vehicle types from hypersonic aircraft to reusable space launchers.

"It's time to fly. This exciting, challenging, ground and flight research program will significantly expand the boundaries of air-breathing flight for the first time ever, by flying a scramjet-powered aircraft at hypersonic speeds," said Vince Rausch, the Hyper-X Phase I program manager.

The first Hyper-X unpiloted, hypersonic, flight-research vehicle is scheduled to fly at Mach 7 in 1998. This is far faster than any air-breathing aircraft have ever flown. The world's fastest air-breathing aircraft, the SR-71, cruises slightly above Mach 3. The highest speed attained by NASA's rocket-powered X-15 was Mach 6.7. A rocket carries its own oxygen for combustion; an air-breathing aircraft burns oxygen in air scooped from the atmosphere. Because of this, air-breathing hypersonic vehicles should carry more cargo/payload than equivalent rocket-powered systems.

-more-

The goal of the Hyper-X program is to validate key propulsion and related technologies for air-breathing hypersonic aircraft. Heading the list is the demonstration of a ramjet/scramjet engine, followed by validation of design tools and methods for air-breathing hypersonic vehicles.

A ramjet operates by subsonic combustion of fuel in a stream of air compressed by the forward speed of the aircraft itself; as opposed to a normal jet engine, in which the compressor section (the fan blades) compresses the air. The fuel for Hyper-X will be hydrogen.

A scramjet (supersonic-combustion ramjet) is a ramjet engine in which the airflow through the whole engine remains supersonic. Scramjet technology is challenging because only limited testing can be performed in ground facilities. Long duration, full-scale testing requires flight test speeds above Mach 8. Hyper-X will build knowledge, confidence and a technology bridge to very high Mach number flight.

Hyper-X will ride on the first stage of a Pegasus booster rocket, which will be launched by the Dryden B-52 at about 40,000 feet. For each flight, the booster will accelerate the Hyper-X research vehicle to the test conditions (Mach 5, 7 or 10) at approximately 100,000 feet, where it will separate from the booster and fly under its own power.

Four flights are planned - one each at Mach 5 and 7 and two at Mach 10. The flight tests will be conducted within the Western Test Range off the coast of southern California.

Vehicle and engine ground tests and analyses will be performed prior to each flight in order to compare with flight and ground test results. In addition, the Hyper-X Mach 7 vehicle will first be tested in Langley's eight-foot High Temperature Wind Tunnel. The vehicle, with a fully operating ramjet/scramjet propulsion system, will be put through tests in the tunnel simulating many, but not all, Mach 7 flight conditions.

-end-

NASA press releases and other information are available automatically by sending an Internet electronic mail message to domo@hq.nasa.gov. In the body of the message (not the subject line) users should type the words "subscribe press-release" (no quotes). The system will reply with a confirmation via E-mail of each subscription. A second automatic message will include additional information on the service. NASA releases also are available via CompuServe using the command GO NASA.

Contract Announcement

National Aeronautics and
Space Administration

Washington, DC 20546
(202) 358-1600

For Release

Dwayne Brown
Headquarters, Washington, DC
(Phone: 202/358-1726)

October 10, 1996

John Bluck
Ames Research Center, Mountain View, CA
(Phone: 415/604-5026)

RELEASE: C96-I

INTERMETRICS INC. AWARDED $33 MILLION SOFTWARE CONTRACT

NASA has selected Intermetrics Inc., Warminster, PA, for award of a $33.1 million contract to provide independent verification and validation (IV&V) of selected program software for NASA projects including the International Space Station, the Space Shuttle, robotic spacecraft and ground software.

The eight-year cost-plus-fixed-fee/incentive-fee contract includes a one-year base period followed by seven one-year options. Cost of the contract includes all options. The contract will be managed out of the NASA Ames Research Center's IV&V Facility located in Fairmont, WV.

Because many NASA programs increasingly rely on software that involves safety and other critical functions, the software must be of the highest quality, and it must be delivered on time, according to NASA officials. Through the independent evaluation of critical software throughout its development, the IV&V efforts under this contract will significantly help NASA to achieve these requirements.

-end-

Press releases and other information are available automatically by sending an Internet electronic mail message to domo@hq.nasa.gov. In the body of the message (not the subject line) users should type the words "subscribe press-release" (no quotes). The system will reply with a confirmation via E-mail of each subscription. A second automatic message will include additional information on the service. NASA releases also are available via CompuServe using the command GO NASA.

VideoAdvisory

National Aeronautics and
Space Administration

Washington, D.C. 20546
(202) 358-1600

For Release

Deanna Corridon
Headquarters, Washington, DC
(Phone: 202/358-1733)

October 10, 1996

VIDEO ADVISORY: V96-124

X-1 ANNIVERSARY OBSERVED

On Thursday the NASA TV Video File will feature b-roll of the X-1 aircraft. A half-century ago this month, NASA's predecessor, the National Advisory Committee for Aeronautics (NACA), helped launch 50 years of X-plane research with the first flight of the Bell X-1 aircraft over California's Antelope Valley. NASA TV also will replay footage of a Ford Thunderbird race car being equipped with a prototype Thermal Protection System consisting of the same insulation material used on the Space Shuttle, and footage of a fire imager that will enable firefighters to see invisible flames.

Today at 5:00 PM EDT, NASA TV will televise the STS-79 Crew Briefing to employees at the Johnson Space Center, Houston, TX. Although there will be no Q&A opportunity for media, NASA TV will televise the event live.

ITEM #1: HAPPY BIRTHDAY X-1

B-roll of the X-1 aircraft which includes 60 seconds of new material. *For more information contact Don Nolan-Proxmire at (202) 358-1983 or Kirsten Williams at (805) 258-2662.*

ITEM #2: REPLAY - HOT CAR COOL DOWN

ITEMS #3-5: REPLAY - FIRESCAPE

Video news files air daily at noon, 3, 6, 9 p.m. and midnight EDT.

NASA Television is broadcast on Spacenet 2, transponder 5, channel 9, C-Band, located at 69 degrees West longitude, with horizontal polarization. Frequency is on 3880.0 megahertz, with audio on 6.8 megahertz.

- end -

News Release

National Aeronautics and
Space Administration

Washington, DC 20546
(202) 358-1600

Don Nolan-Proxmire
Headquarters, Washington, DC
(Phone: 202/358-1983)

Kirsten Williams
Dryden Flight Research Center, Edwards, CA
(Phone: 805/258-2662)

For Release
October 10, 1996

RELEASE: 96-204

THE X-PLANES: 50 YEARS OF HIGH DESERT "RIGHT STUFF"

A half-century ago this month, NASA's predecessor, the National Advisory Committee for Aeronautics (NACA), helped launch 50 years of high desert "right stuff" with the first flight of the Bell X-1 aircraft over Southern California's Antelope Valley.

On Oct. 11, 1946, Chalmers "Slick" Goodlin, chief pilot for the Bell Aircraft Corp., flew an unpowered, seven-minute glide test of the second X-1, serial number 46-063, over Muroc, CA -- now the site of Edwards Air Force Base and NASA's Dryden Flight Research Center. Glide tests were important for studying landing characteristics of the X-1s, as all of those aircraft landed as gliders after their fuel was exhausted.

The second X-1 was the sister ship to vehicle No. 1, serial number 46-062, "Glamorous Glennis," which is remembered as the first aircraft to break the sound "barrier" on Oct. 14, 1947.

"The X-1 program provided NACA with the first full-scale tool that allowed it to explore transonic aerodynamics," said Jay Miller, author of "The X-Planes: X-1 to X-31."

Researchers and engineers on the X-1 program -- a joint effort between Bell Aircraft Corp., Buffalo, NY, the United States Army Air Forces and NACA -- were especially interested in the effects of transonic speeds on the stability and control of aircraft.

The Langley Memorial Aeronautical Laboratory, Hampton, VA, designed the instrumentation requirements for the craft, which included rate-of-turn recorders, pressure-distribution orifices on the wings and tail and pedal-force transmitters, as well as other data-gathering devices. From research acquired during earlier tests, the committee proposed installing a movable horizontal stabilizer. This element became crucial when Ship No. 1 reached Mach .94 and its elevators lost their effectiveness. So important was the all-movable horizontal stabilizer that virtually every transonic and supersonic aircraft since that time has had one.

-more-

Bell manufactured three first-generation X-1s, originally designated the XS-1s. Ship No. 1 flew the first unpowered glide tests at Pinecastle Army Airfield, near Orlando, FL, in early 1946; that phase ended in March of that year, and the program was then relocated to Muroc.

"The move was a logistics issue as much as anything; Pinecastle was not suitable," Miller said. A move to the remote California desert ensured the project team could maintain secrecy, he said, an important issue considering the project was classified at the time.

In addition, Muroc had an expansive landing area, thanks to the surrounding dry lakebeds, and better visibility. "The plane's high sink rate and the problems of keeping the plane in sight amid Florida's frequent clouds added two more votes in favor of the [Army Air Forces'] decision to go to Muroc," historian-author Richard Hallion wrote in his book, "On the Frontier: Flight Research at Dryden, 1946-1981."

Walter C. Williams, an NACA engineer and later the first director of what would become Dryden, led the team of five engineers, who arrived at the Muroc site 50 years ago on Sept. 30. Williams had helped implement the flight-path tracking system during the Pinecastle flights, and, at Muroc, he and his team set up similar equipment, including two SCR-584 radar. Although the X-1 project most often is associated with the United States Air Force, Williams and his NACA team provided essential hands-on support during the program. In 1948, President Harry S. Truman awarded the Collier Trophy to NACA's John Stack, as well as Bell's Larry Bell and the Air Force's Chuck Yeager, emphasizing the partnership that existed among the three groups.

The decision to move to Muroc proved to be a wise one. During the first glide flight on Oct. 11, Goodlin landed Ship No. 2 almost halfway down the 6,500-foot runway, continued off the runway and rolled 4,500 feet over the dry lakebed.

On Sept. 25, 1947, the Air Force officially turned ship No. 2 over to the NACA. NACA pilot Herbert Hoover became the first civilian to fly an X-1 supersonically on March 10, 1948 -- at the controls of NACA's ship No. 2.

NACA later converted the second X-1 into the X-1E, which had thinner wings than the original aircraft, a modified canopy and other upgrades. The first X-1 ever to fly in the Antelope Valley now stands in front of NASA Dryden's headquarters, as the modified X-1E. That aircraft became the last of the X-1s ever to fly on Nov. 6, 1958, with NACA pilot Joe Walker at the controls.

The X-1 project not only provided data never before available about the behavior of aircraft at transonic speeds, but also pioneered the test methods that Dryden researchers have used for 50 years of successful flight research. The X-1 program proved the ability of flight research to "separate the real from the imagined." In the case of supersonic flight, the X-1 program proved the perceived sound "barrier" was actually no barrier at all.

-end-

News Release

National Aeronautics and
Space Administration

Washington, DC 20546
(202) 358-1600

For Release

Douglas Isbell
Headquarters, Washington, DC
(Phone: 202/358-1547)

October 10, 1996

Diane Ainsworth
Jet Propulsion Laboratory, Pasadena, CA
(Phone: 818/354-5011)

RELEASE: 96-205

PRESS BRIEFING ON 1996 MARS MISSIONS SET FOR OCTOBER 16

NASA Administrator Daniel S. Goldin and a panel of senior space scientists and engineers will discuss NASA's plans for the robotic exploration of Mars and, specifically, the two U.S. missions set for launch to the planet this fall, during a press briefing on Wednesday, October 16, at NASA Headquarters, Washington, DC.

Administrator Goldin is scheduled to open the briefing at 11:30 a.m. EST with remarks on NASA's vision for Mars exploration. Dr. Wesley Huntress, NASA Associate Administrator for Space Science, will speak at 1 p.m. on the goals of the space agency's long-term Mars Surveyor Program and on NASA's cooperation with Russia in the Mars '96 mission. Dr. Michael Carr of the U.S. Geological Survey then will discuss the state of scientific knowledge about Mars, and what major questions the upcoming missions will help answer.

This will be followed by a panel of speakers focused on detailed discussions of the Mars Global Surveyor (MGS) orbiter and Mars Pathfinder lander missions, featuring:

- Glenn Cunningham, MGS project manager
- Dr. Arden Albee, MGS project scientist
- Anthony Spear, Mars Pathfinder project manager
- Dr. Matthew Golombek, Mars Pathfinder project scientist.

MGS is due for launch on November 6 and Mars Pathfinder is due for launch on December 2, both on Delta II launch vehicles, from NASA's Kennedy Space Center, FL. An on-time launch of Mars Pathfinder would result in its landing in the Ares Vallis region of Mars on July 4, 1997. MGS arrives in orbit around Mars in September 1997 and after several months of aerobraking in the upper atmosphere of Mars, will begin its primary mapping mission in March 1998.

-more-

The press briefing will be broadcast on NASA TV, with interactive question-and-answer capability at participating NASA centers. In addition, the NASA TV Video File on that day will be dedicated to Mars, barring any breaking news events.

NASA Television is located at Spacenet 2, Transponder 5, Channel 9, C-Band, located at 69 degrees West longitude, with horizontal polarization. Frequency will be on 3880.0 megahertz, with audio on 6.8 megahertz.

Further information on NASA's plans for robotic Mars exploration can be accessed on the Internet at the following URL:

http://www.jpl.nasa.gov/mars/

-end-

News Release

National Aeronautics and
Space Administration
Washington, DC 20546
(202) 358-1600

For Release
October 15, 1996

Ed Campion
Headquarters, Washington, DC
(Phone: 202/358-1778)

Rob Navias
Jphnson Space Center, TX
(Phone: 713/483-5111)

RELEASE: N96-64

LUCID TO DISCUSS RECORD-SETTING STAY ON MIR

Astronaut Shannon Lucid, who recently set a U.S. single mission space flight endurance record on the Russian Mir Space Station and the shuttle Atlantis, will discuss her journey during a news conference at the Johnson Space Center, TX on October 24 at 1:30 pm EDT.

The news conference, which will be broadcast on NASA Television, will provide multi-center question and answer capability for reporters in attendance at participating NASA centers. Because of her postflight schedule requirements, Dr. Lucid may not be available for additional interview opportunities in the near future.

Dr. Lucid returned to Earth on September 26 after traveling more than 75 million miles during her 188-day research flight. Her record eclipsed the previous U.S. endurance mark of 115 days in space for a single mission set by former astronaut Norm Thagard during his flight on the Mir in 1995 as the first U.S. astronaut to live and work on the Russian space complex.

Dr. Lucid's news conference can be seen on NASA Television, which is carried on Spacenet 2, Transponder 5, Channel 9 at 69 degrees West longitude, frequency 3880 Mhz, audio 6.8 Mhz.

-end-

NASA press releases and other information are available automatically by sending an Internet electronic mail message to domo@hq.nasa.gov. In the body of the message (not the subject line) users should type the words "subscribe press-release" (no quotes). The system will reply with a confirmation via E-mail of each subscription. A second automatic message will include additional information on the service. NASA releases also are available via CompuServe using the command GO NASA.

96-206

NATIONAL AERONAUTICS AND SPACE ADMINISTRATION

SPACE SHUTTLE MISSION

STS-80

PRESS KIT
November 1996

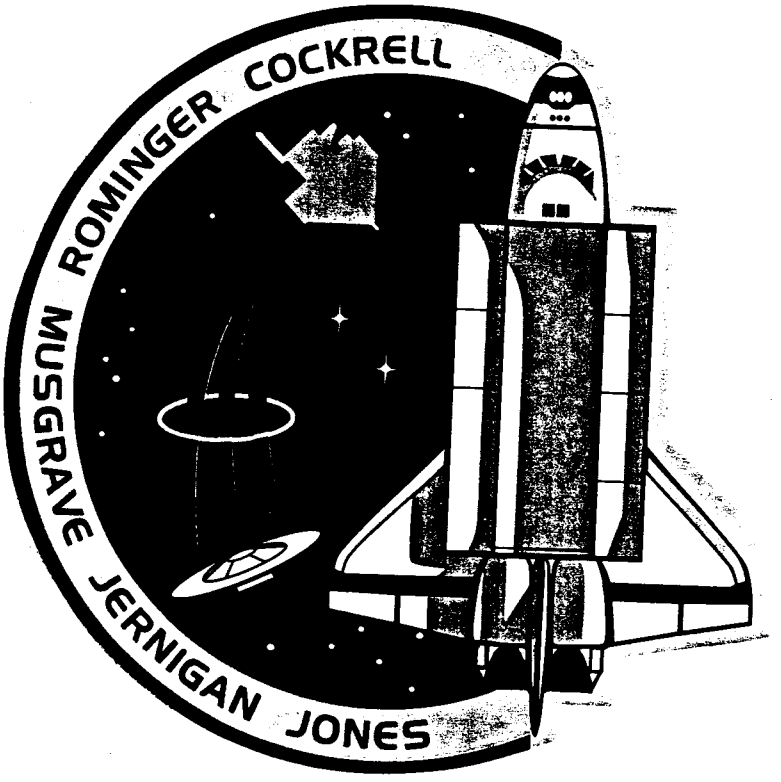

WAKE SHIELD FACILITY
ORFEUS-SPAS

TABLE OF CONTENTS

NEWS MEDIA CONTACTS....2
MEDIA SERVICES INFORMATION....5
STS-80 QUICK LOOK....7
CREW RESPONSIBILITIES....8
DEVELOPMENTAL TEST OBJECTIVES,....8
DETAILED SUPPLEMENTARY OBJECTIVES....8
MISSION SUMMARY TIMELINE....9
STS-80 ORBITAL EVENTS SUMMARY....10
PAYLOAD AND VEHICLE WEIGHTS....10
SHUTTLE ABORT MODES....10
ORFEUS-SPAS II....11
SCIENTIFIC OBJECTIVES....11
SCIENCE PAYLOAD....13
THE ASTRO-SPAS CARRIER....14
WAKE SHIELD FACILITY-3 (WSF-3)....15
WAKE SHIELD FACILITY DEPLOY AND RENDEZVOUS....17
PROXIMITY OPERATIONS WITH WSF-3 AND ORFEUS-SPAS-2....17
STS-80 EXTRAVEHICULAR ACTIVITIES....18
EVA DEVELOPMENT FLIGHT TESTS (EDFT)....18
CRANE....18
BATTERY ORBITAL REPLACEMENT UNIT....19
CABLE CADDY....19
PORTABLE WORK PLATFORM....19
BODY RESTRAINT TETHER....19
MULTI-USE TETHER....20
SPACE EXPERIMENT MODULE....20
NIH-R4....21
CCM-A (formerly STL/NIH-C-6)....22
BIOLOGICAL RESEARCH IN CANISTER (BRIC)-09 EXPERIMENT....23
COMMERCIAL MDA ITA EXPERIMENT (CMIX-5)....24
VISUALIZATION IN AN EXPERIMENTAL WATER CAPILLARY PUMPED LOOP (VIEW-CPL)....25
CREW BIOGRAPHIES....25

NEWS MEDIA CONTACTS

For Information on the Space Shuttle

Ed Campion Policy/Management.....202/358-1778
Headquarters, Washington, DC

Rob Navias Mission Operations/Astronauts.....713/483-5111
Johnson Space Center, Houston, TX

Bruce Buckingham Launch Processing/KSC Landing Information.....407/867-2468
Kennedy Space Center, FL

June Malone External Tank/Shuttle Propulsion.....205/544-0034
Marshall Space Flight Center, Huntsville, AL

Cam Martin DFRC Landing Information.....805/258-3448
Dryden Flight Research Center, Edwards, CA

For Information on STS-80 Experiments & Activities

James Cast WSF / VIEW-CPL / CMIX.....202/358-1779
Headquarters, Washington, DC

Doug Isbell ORFEUS-SPAS.....202/358-1547
Headquarters, Washington, DC

Mike Braukus NIH-R / BRIC.....202/358-1979
Headquarters, Washington, DC

Tammy Jones SEM.....301/286-5566
Goddard Space Flight Center, Greenbelt, MD

GENERAL RELEASE

RELEASE: 96-206

TWO SATELLITES DEPLOYED & RETRIEVED, PAIR OF SPACE WALKS HIGHLIGHT NASA'S FINAL MISSION FOR 1996

NASA's final Shuttle flight for 1996 will again demonstrate the versatility of the Space Shuttle system. During Mission STS-80, Columbia's five person crew will deploy and retrieve two free-flying spacecraft, conduct two space walks and perform a variety of microgravity research experiments in the Shuttle's middeck area.

The STS-80 crew will be commanded by Kenneth D. Cockrell, who will be making his third space flight. The pilot, Kent V. Rominger, will be making his second flight. The three mission specialists for STS-80 are Tamara E. Jernigan who is making her fourth flight, Thomas D. Jones who is making his third flight and Story Musgrave who is making his sixth space flight.

Columbia is currently targeted for launch on Nov. 8, 1996, from NASA Kennedy Space Center's Launch Complex 39-B. The two-hour, thirty-minute launch window opens at 2:47 p.m. EST. The planned mission duration is 15 days, 16 hours, 44 minutes. A launch at the opening of the window would set Columbia and her crew up for a return to KSC's Shuttle Landing Facility on Nov. 24 at 7:31 a.m. EST.

The first of the two free-flying payloads being carried aboard Columbia is the Orbiting Retrievable Far and Extreme Ultraviolet Spectrometer (ORFEUS) satellite. The ORFEUS instruments are mounted on the reusable Shuttle Pallet Satellite (SPAS) and will study the origin and makeup of stars. About seven hours after launch, ORFEUS-SPAS will be deployed using the Shuttle's mechanical arm. It will fly free of the Shuttle for almost two weeks until it is retrieved on Flight Day 13.

The second of the two free-flying payloads aboard Columbia is the Wake Shield Facility (WSF). The WSF is designed to fly free of the Shuttle, creating a super vacuum in its wake in which to grow thin film wafers for use in semiconductors and other high-tech electrical components. WSF will be deployed on Flight Day 4 and retrieved on Flight Day 7.

Astronauts Tammy Jernigan and Tom Jones will perform two six-hour spacewalks during STS-80, one on Flight Day 10 and another on Day 12, to evaluate equipment and procedures that will be used during construction and maintenance of the International Space Station.

Two on-going collaborative efforts between NASA and the National Institutes of Health (NIH) will be a part of STS-80. One effort is NIH-R-4 which will study blood pressure regulation and function in rats fed either a high- or a low-calcium diet before and during space flight. This study will add to the body of knowledge necessary to maintain the health of astronauts during space flight. The other experiment, CCM-A, (formerly NIH-C-6) will continue the investigation into how microgravity affects bones

at the cellular level. The bone loss experienced by astronauts in orbit is similar to that which occurs in people who undergo prolonged bed rest.

The Biological Research in Canister (BRIC) experiment will focus on the effects of genetic expression and microgravity on plants. Researchers hope that BRIC will help improve growth rates and biomass production of plants grown in space and may enhance crop productivity on the Earth.

The Space Experiment Module (SEM) flying on STS-80 is a NASA education initiative that provides increased educational access to space. The program targets kindergarten through university level participants. SEM stimulates and encourages direct student participation in the creation, development, and flight of zero-gravity and microgravity experiments on the Space Shuttle.

Other experiments aboard the shuttle will conduct research in a multitude of areas including acid rain, developing better treatments for the human body and excess heat generated by spacecraft instruments.

STS-80 will be the 21st flight of Columbia and the 80th mission flown since the start of the Space Shuttle program in April 1981.

-end of general release-

MEDIA SERVICES INFORMATION

NASA Television Transmission

NASA Television is available through the Spacenet-2 satellite system. Spacenet-2 is located on Transponder 5, channel 9, C-Band, at 69 degrees West longitude, frequency 3880.0 MHz, audio 6.8 MHz.

The schedule for television transmissions from the Orbiter and for mission briefings will be available during the mission at Kennedy Space Center, FL; Marshall Space Flight Center, Huntsville, AL; Dryden Flight Research Center, Edwards, CA; Johnson Space Center, Houston, TX; and NASA Headquarters, Washington, DC. The television schedule will be updated to reflect changes dictated by mission operations.

Television schedules also may be obtained by calling COMSTOR at 713/483-5817. COMSTOR is a computer data base service requiring the use of a telephone modem. A voice update of the television schedule is provided daily at noon Eastern time.

Status Reports

Status reports on countdown and mission progress, on-orbit activities and landing operations will be produced by the appropriate NASA newscenter.

Briefings

A mission press briefing schedule will be issued before launch. During the mission, status briefings by a flight director or mission operations representative and when appropriate, representatives from the payload team, will occur at least once each day. The updated NASA television schedule will indicate when mission briefings are planned.

Internet Information

Information on STS-80 is available through several sources on the Internet. The primary source for mission information is the NASA Shuttle Web, part of the World Wide Web. This site contains information on the crew and their mission and will be regularly updated with status reports, photos and video clips throughout the flight. The NASA Shuttle Web's address is:

http://shuttle.nasa.gov

If that address is busy or unavailable, Shuttle information is available through the Office of Space Flight Home Page:

http://www.osf.hq.nasa.gov/

General information on NASA and its programs is available through the NASA Home Page and the NASA Public Affairs Home Page:

http://www.nasa.gov

or **http://www.gsfc.nasa.gov/hqpao/hqpao_home.html**

Information on other current NASA activities is available through the Today@NASA page:

http://www.hq.nasa.gov/office/pao/NewsRoom/today.html

The NASA TV schedule is available from the NTV Home Page:

http://www.hq.nasa.gov/office/pao/ntv.html

Status reports, TV schedules and other information are also available from the NASA Headquarters FTP (File Transfer Protocol) server, ftp.hq.nasa.gov. Log in as anonymous and go to the directory /pub/pao. Users should log on with the user name "anonymous" (no quotes), then enter their E-mail address as the password. Within the /pub/pao directory there will be a "readme.txt" file explaining the directory structure:

- Pre-launch status reports (KSC): **ftp.hq.nasa.gov/pub/pao/statrpt/ksc**
- Mission status reports(JSC): **ftp.hq.nasa.gov/pub/pao/statrpt/jsc**
- Daily TV schedules: **ftp.hq.nasa.gov/pub/pao/statrpt/jsc/tvsked**.

NASA's Spacelink, a resource for educators, also provides mission information via the Internet. The system fully supports the following Internet services:

- World Wide Web: **http://spacelink.msfc.nasa.gov**
- Gopher: **spacelink.msfc.nasa.gov**
- Anonymous FTP: **spacelink.msfc.nasa.gov**
- Telnet : **spacelink.msfc.nasa.gov**

Spacelink's dial-up modem line is 205/895-0028.

Access by CompuServe

Users with CompuServe accounts can access NASA press releases by typing "GO NASA" (no quotes) and making a selection from the categories offered.

STS-80 QUICK LOOK

Launch Date/Site:	Nov. 8, 1996/KSC Launch Pad 39-B
Launch Time:	2:47 PM EST
Launch Window:	2 hours, 30 minutes
Orbiter:	Columbia (OV-102), 21st flight
Orbit Altitude/Inclination:	190 nautical miles, 28.5 degrees
Mission Duration:	15 days, 16 hours, 44 minutes
Landing Date:	Nov. 24, 1996
Landing Time:	7:31 AM EST
Primary Landing Site:	Kennedy Space Center, FL
Abort Landing Sites:	
	Return to Launch Site - KSC
	Transoceanic Abort Sites - Ben Guerir, Morocco Moron, Spain
	Abort-Once Around - Edwards AFB, CA
Crew:	Ken Cockrell, Commander (CDR), 3rd flight
	Kent Rominger, Pilot (PLT), 2nd flight
	Tammy Jernigan, Mission Specialist 1 (MS 1), 4th flight
	Tom Jones, Mission Specialist 2 (MS 2), 3rd flight
	Story Musgrave, Mission Specialist 3 (MS 3), 6th flight
EVA Crew:	Tammy Jernigan (EV 1), Tom Jones (EV 2)
Cargo Bay Payloads:	ORFEUS-SPAS-02
	WSF-03
	EDFT-05
In-Cabin Payloads:	PARE-NIH-R
	CMIX
	VIEW-CPL
	BRIC
	CMIX
	CCM-A

CREW RESPONSIBILITIES

Payloads

	Prime	Backup
ORFEUS-SPAS	Jernigan	Musgrave
Wake Shield Facility	Musgrave	Jones
EVA	Jernigan (EV 1) Jones (EV 2)	
Intravehicular Crewmember	Musgrave	--------
RMS	Jones	Jernigan, Rominger
Rendezvous	Cockrell	Rominger, Musgrave
Orbiter Space Vision System	Jernigan	Jones
CMIX	Rominger	Musgrave
BRIC	Jones	Jernigan
Earth Observations	Musgrave	Jones
VIEW-CPL	Rominger	Jernigan
PARE-NIH	Cockrell	Musgrave

DEVELOPMENTAL TEST OBJECTIVES, DETAILED SUPPLEMENTARY OBJECTIVES

DTO 255: Wraparound DAP Flight Test Verification
DTO 312: ET TPS Performance
DTO 667: Portable In-Flight Landing Operations Trainer
DTO 671: EVA Hardware for Future Scheduled EVA Missions
DTO 700-10: Orbiter Space Vision System Flight Video Taping
DTO 700-11: Orbiter Space Vision System Flight Unit Testing
DTO 833: EMU Thermal Comfort and EVA Worksite Thermal Evaluation
DTO 840: Hand-Held Lidar Procedures
DSO 485: ITEPC Bay 3 Starboard, Aft
DSO 487: Immunological Assessment of Crewmembers
DSO 901: Documentary Television
DSO 902: Documentary Motion Picture Photography
DSO 903: Documentary Still Photography

MISSION SUMMARY TIMELINE

Flight Day One:
Launch/Ascent
OMS-2 Burn
Payload Bay Door Opening
RMS Checkout
ORFEUS-SPAS Deploy

Flight Day 2:
Orbiter Space Vision System Operations
CMIX Operations
VIEW-CPL Operations

Flight Day 3:
EMU Checkout
WSF Predeploy Preparations
SPAS Rendezvous Burns

Flight Day 4:
Wake Shield Deploy
Rendezvous Burns

Flight Day 5:
VIEW-CPL Operations
Secondary Experiments

Flight Day 6:
Off Duty Time
VIEW-CPL Operations
Rendezvous Burns

Flight Day 7:
Wake Shield Facility Rendezvous and Grapple
SPAS Rendezvous Burns

Flight Day 8:
Wake Shield Facility Grapple, Unberth and Attached Science
VIEW-CPL Operations
Orbiter Space Vision Operations
Secondary Experiments
Cabin Depress
SPAS Rendezvous Burns

Flight Day 9:
EVA Tool Setup
Middeck Preparations for EVA
SPAS Rendezvous Burns

Flight Day 10:
EVA Preparations
Prebreathe
EVA 1 (6 hours)

Flight Day 11:
EVA Tool Setup
EMU Maintenance
SPAS Rendezvous Burns

Flight Day 12:
EVA Preparations
Prebreathe
EVA 2 (6 hours)

Flight Day 13:
SPAS Rendezvous Burns
Off Duty Time
Orbiter Space Vision System Operations
EVA Questionnaires
EVA Tool Stowage
PILOT Operations

Flight Day 14:
ORFEUS-SPAS Rendezvous and Grapple
Orbiter Space Vision System Operations
PILOT Operations

Flight Day 15:
Crew News Conference
Hubble Space Telescope Vernier RCS Reboost Demonstration
PILOT Operations
Flight Control System Checkout
Reaction Control System Hot-Fire
Cabin Stow

Flight Day 16/17:
Deorbit Preparation Briefing
Deorbit Prep
Payload Bay Door Closing
Deorbit Burn
KSC Landing

STS-80 ORBITAL EVENTS SUMMARY
(Based on a Nov. 8, 1996 Launch)

EVENT	MET	TIME OF DAY (EST)
Launch	0/00:00	2:47 PM, Nov. 8
ORFEUS-SPAS Deploy	0/07:00	9:47 PM, Nov. 8
Wake Shield Facility Deploy	3/05:10	7:57 PM, Nov. 11
Wake Shield Facility Grapple	6/09:07	11:54 PM, Nov. 14
EVA 1 Begins (6 1/2 hrs.)	9/06:20	9:07 PM, Nov. 17
EVA 2 Begins (6 1/2 hrs.)	11/06:50	9:37 PM, Nov. 19
ORFEUS-SPAS Grapple	13/10:35	1:22 AM, Nov. 22
Crew News Conference	14/06:05	8:52 PM, Nov. 22
Deorbit Burn	15/15:38	6:25 AM, Nov. 24
KSC Landing	15/16:44	7:31 AM, Nov. 24

MET: Mission Elapsed Time (Days/Hours:Minutes after launch.)

PAYLOAD AND VEHICLE WEIGHTS

Vehicle/Payload	Pounds
Orbiter (Columbia) empty and 3 SSME's	181,740
Shuttle System at SRB Ignition	4,524,590
Orbiter Weight at Landing with Cargo	226,954
ORFEUS-SPAS	7,876
Wake Shield Facility	4,650
WSF Carrier System	4,750

SHUTTLE ABORT MODES

Space Shuttle launch abort philosophy aims toward safe and intact recovery of the flight crew, Orbiter and its payload. Abort modes for STS-80 include:

• Abort-To-Orbit (ATO) -- Partial loss of main engine thrust late enough to permit reaching a minimal 105-nautical mile orbit with the orbital maneuvering system engines.

• Abort-Once-Around (AOA) -- Earlier main engine shutdown with the capability to allow one orbit of the Earth before landing at the Kennedy Space Center, FL.

• Transoceanic Abort Landing (TAL) -- Loss of one or more main engines midway through powered flight would force a landing at either Ben Guerir, Morocco; or Moron, Spain.

• Return-To-Launch-Site (RTLS) -- Early shutdown of one or more engines, and without enough energy to reach a TAL site, would result in a pitch around and thrust back toward Kennedy until within gliding distance of the Shuttle Landing Facility.

ORFEUS-SPAS II

The Orbiting and Retrievable Far and Extreme Ultraviolet Spectrograph-Shuttle Pallet Sattelite II (ORFEUS-SPAS II) mission is the third flight to use the German-built ASTRO-SPAS science satellite. The ASTRO-SPAS program is a cooperative endeavor between NASA and the German Space Agency, DARA.

ORFEUS-SPAS II, a free-flying satellite, will be deployed and retrieved using the Space Shuttle Columbia's Remote Manipulator System (RMS). The goal of this astrophysics mission is to investigate the rarely explored far- and extreme-ultraviolet regions of the electromagnetic spectrum, and study the very hot and very cold matter in the universe.

ORFEUS-SPAS II will be attempting a large number of observing programs. Among the many areas in which scientists hope to gain new insights during this mission are the evolution of stars, the structure of galaxies, and the nature of the interstellar medium, and others. Many of the objects they are planning to look at have never before been observed in the far-ultraviolet.

ASTRO-SPAS is a carrier designed for launch, deployment and retrieval by the Space Shuttle. Once deployed from the Shuttle's RMS, ASTRO-SPAS will operate quasi-autonomously for 14 days in the vicinity of the Shuttle. The carrier's inclination will be 28.4 degrees with an altitude of 218 statute miles. After completion of the free flight phase, the satellite will be retrieved by the RMS, returned to the Shuttle cargo bay and returned to Earth.

The one-meter diameter ORFEUS-Telescope with the Far Ultraviolet (FUV) Spectrograph and the Extreme Ultraviolet (EUV) Spectrograph comprises the main payload. A secondary, but highly complementary, payload is the Interstellar Medium Absorption Profile Spectrograph (IMAPS). In addition to the astronomy payloads, ORFEUS-SPAS II carries the Surface Effects Sample Monitor (SESAM), the ATV Rendezvous Pre-Development Project (ARP), and the Student Experiment on ASTRO-SPAS (SEAS).

SCIENTIFIC OBJECTIVES

The ORFEUS-SPAS II mission is dedicated to astronomical observations at very short wavelengths, specifically the two spectral ranges Far Ultraviolet (FUV, 90-125 nanometers) and Extreme Ultraviolet (EUV, 40-90 nanometers). This part of the electromagnetic spectrum, which is obscured by the Earth's atmosphere precluding ground-based observations and not observed by the Hubble Space Telescope, includes a high density of spectral lines (especially from various states of hydrogen and oxygen), which are emitted or absorbed by matter covering a wide range of temperatures.

The primary scientific objectives are:

- Investigation of the nature of hot stellar atmospheres
- Investigation of cooling mechanisms of white dwarf stars
- Determination of the nature of accretion disks around collapsed stars
- Investigation of supernova remnants
- Investigation of the interstellar medium and potential star forming regions

The ORFEUS-SPAS I mission, which flew on the Shuttle Discovery STS-51 mission in September 1993, provided valuable information in this largely unexplored region of the electromagnetic spectrum. ORFEUS-SPAS I provided information on the details of the structure and dynamics of interstellar gas clouds and insight into how molecular hydrogen is created in interstellar space. Also studied were neutral and ionized gas in the interstellar medium from the local solar neighborhood out to the distant halo of our galaxy. ORFEUS-SPAS I also obtained spectra of a very diverse group of important astrophysical objects, including a compact interacting binary star with an enormous magnetic field, three hot white dwarf stars and the distant active galaxy PKS2155-304.

Star formation is not yet completely understood. Stars are, however, known to be formed in dense clouds of interstellar gas and dust. Under gravitational contraction, these clouds can become dense enough to trigger star formation. ORFEUS-SPAS II data will help to measure the size, distance, density and temperature of such clouds, which in turn aids in understanding of the circumstances under which interstellar clouds collapse and new stars are born.

Once a star is formed, its evolution is mainly ruled by its mass. High mass stars burn energy through nuclear fusion more than 100,000 times faster than Earth's Sun, through processes which give rise to bright ultraviolet emission and strong winds of hot ionized material. ORFEUS-SPAS II will study the surfaces and winds of such objects.

Low-mass stars like Earth's Sun burn their energy reserves relatively slowly, not emitting large amounts of ultraviolet radiation. The outermost layers of their atmospheres can become very hot, however, due to turbulent convection which creates shock waves. ORFEUS-SPAS II will measure ultraviolet spectra of such layers of relatively cold stars to help understand the physics of these processes.

Most stars end up as compact white dwarfs. These stars take a very long time to cool down. During that time, they emit most of their energy in the ultraviolet wavelength range, and are among the brightest EUV sources. ORFEUS-SPAS II will observe compact white dwarfs to gain a new understanding of their cooling mechanisms.

Once their energy reserves have been depleted, larger stars explode as supernovae and return their mass back to the interstellar medium. ORFEUS-SPAS II is capable of tracing supernova remnants.

Under certain conditions, the stars of binary systems can exchange material, forming hot accretion disks. ORFEUS-SPAS II observations of these systems are

aimed at determining how fast the stars exchange material and other characteristics of the disk.

Scientists believe that a similar phenomenon takes place on a much larger scale in the centers of some galaxies, known as Active Galactic Nuclei (AGN). In AGN, massive black holes are believed to be surrounded by huge accretion disks. Direct observation of a possible AGN in the Milky Way galaxy is obscured by dense clouds of dust. AGNs are inherently bright, but appear faint because of their enormous distance from Earth. Because very little data is available on AGNs, even a single spectrum of these exotic objects obtained by ORFEUS-SPAS II could lead to an important new understanding.

For the science community ORFEUS-SPAS II offers one additional major advantage over the first flight: half the observing time during the mission has been made available to the general science community. Including the instrument teams, ORFEUS-SPAS II will have more than 40 research teams around the world receiving and analyzing data from the mission.

Science Payload

The ORFEUS-SPAS II science payload is provided by German and U.S. research institutions with funding provided by DARA and NASA. Science operations will be conducted in the mobile German SPAS Payload Operations Center (SPOC) at Kennedy Space Center.

The core instrument is the ORFEUS telescope with the FUV Echelle spectrograph and the EUV spectrograph, built into the telescope structure. The 1-meter diameter ultraviolet telescope has a 2.4-meter focal length. An iridium coating on the primary mirror serves as a reflection enhancement for ultraviolet wavelengths. Essential stability against mechanical and thermal load deformations is provided by the carbon fiber epoxy compound tube structure.

The EUV spectrograph is directly exposed to light reflected off the main mirror. It covers the spectral range 40-115 nanometers, offering a resolution of about **5,000** over the whole bandwidth. In order to achieve this unprecedented high resolution over such a wide band-width, a completely new design was used, which produces **high quality spectra.**

The FUV Echelle spectrograph is operated alternatively with the EUV spectrograph, by flipping a mirror into the beam reflected off the primary mirror. The FUV spectrograph covers the wavelength range 90-125 nanometers and provides a spectral resolution on the order of 10,000. Two reflection gratings disperse the light into a spectrum, which is projected onto a two-dimensional micro channel-plate-detector. The detector is optimized for high spatial resolution.

IMAPS, the Interstellar Medium Absorption Profile Spectrograph is a separate instrument, attached to the ASTRO-SPAS framework. IMAPS operates independently of the ORFEUS telescope. IMAPS will be operated for more than two days over the duration of the free flight mission and during that time will observe the brightest

galactic objects at extremely high resolutions. This resolution allows study of fine structure in interstellar gas lines. The individual motions of interstellar gas clouds can be determined to an accuracy of 1.6 kilometers per second. IMAPS was successfully flown on several sounding rocket missions as well as on ORFEUS-SPAS I.

To fulfill their obligations to the scientific community, DARA and NASA have initiated an ORFEUS Guest Investigator (GI) program. Both parties envision a 50-50 split in mission observing time between the GI and instrument Principal Investigator programs. NASA and DARA have agreed to share equally the available GI observing time. The proposals received at both agencies were evaluated in competitive scientific peer reviews and from the successful U.S. and German proposals a combined, non-overlapping list of recommended targets was generated.

Another science payload is the Surface Effects Sample Monitor (SESAM), a passive carrier for state-of-the-art optical surfaces and potential future detector materials. SESAM will investigate the impact of the space environment on materials and surfaces in different phases of a Space Shuttle mission, from launch, orbit phase to re-entry into the Earth's atmosphere. Among the SESAM samples are also witness samples to the telescope mirror, allowing for accurate calibration measurements after landing. Sample spaces are available to scientific and industrial users.

The ATV Rendezvous Pre-Development Project (ARP), part of the European Space Agency's Automated Transfer Vehicle (ATV), is an element of the European manned space transportation program. Among the objectives of the ARP are to develop and validate ground simulation facilities; develop and demonstrate on-board control software and in-orbit relative GPS capabilities; and to demonstrate the operation of the optical rendezvous sensor in orbit.

The Student Experiment on ASTRO-SPAS (SEAS) is an electrolysis experiment built by students of the German high school of Ottobrunn. It consists of eight experiment chambers containing various metal salt solutions and two electrodes. Metal 'trees' of different shapes will grow on one electrode. Photographs taken of this process during the mission will be compared to those of identical experiments conducted on the ground under the full influence of Earth's gravity.

THE DARA SCHOOL PROJECT

For this second ORFEUS-SPAS mission, DARA has developed an innovative educational program designed to reach students in 170 German schools teaching astronomy, physics and computer science. The classes, which already are in progress, have been tailored to prepare the students to use ORFEUS-SPAS data in the study of general astronomy, the life and death of stars, stellar spectral analysis, as well as how to work with the data on computers via the Internet. DARA supplied the necessary written course information and developed an ORFEUS-SPAS Internet home page, where students will receive and work directly with the data obtained during the mission.

The ASTRO-SPAS Carrier

The ASTRO-SPAS being used during the ORFEUS-SPAS II mission provides standardized equipment support panels, extensive onboard facilities and resources to the scientific payloads. Energy is provided by a powerful lithium-sulfur dioxide battery pack. Precise attitude-control is achieved by a three-axis stabilized cold gas system in combination with a star tracker and a specially developed space-borne GPS receiver.

ASTRO-SPAS is a unique carrier for a wide variety of scientific applications, as in the case of ORFEUS-SPAS, to infrared Earth sensing, as in the case of CRISTA-SPAS, which maps trace gases in Earth's middle and upper atmosphere.

Additional information and updates during the mission can be found on the ORFEUS-SPAS II Home Pages on the Internet at:

http://snoopy.gsfc.nasa.gov/~orfeus2/orfeus.html
or **http://ourworld.compuserve.com/homepages/RWatt_DARA.**

WAKE SHIELD FACILITY-3 (WSF-3)

On STS-80, the free-flying Wake Shield Facility (WSF-3) will be making its third flight into orbit. The Facility is a 12-foot diameter, free-flying stainless steel disk designed to generate an "ultra-vacuum" environment in space in which to grow semiconductor thin films for use in advanced electronics. The STS-80 astronaut crew will deploy and retrieve the WSF during the 16-day mission using Columbia's "robot arm," or Remote Manipulator System.

Wake Shield is sponsored by the Space Processing Division in NASA's Office of Life and Microgravity Sciences and Applications. Wake Shield was designed, built and is operated by the Space Vacuum Epitaxy Center at the University of Houston--a NASA Commercial Space Center--in conjunction with its industrial partner, Space Industries, Inc., also in Houston.

Low Earth Orbit (LEO) space has only a moderate natural vacuum, one that can be greatly improved through the generation of an "ultra vacuum" wake behind an object moving through orbit. The WSF, as it flies, moves the residual LEO gas atoms out of the way, leaving few, if any, behind in its wake.

This unique ultra vacuum produced in the wake of the WSF has been shown in past flights to be 100 to 1,000 times better than the best operating ground-based laboratory chamber vacuums. Using this ultra-vacuum in space, the WSF has already grown the highest purity aluminum gallium arsenide thin films, and holds the promise of producing the next generation of semiconductor materials along with the devices they will make possible.

Wake Shield has flown twice before. The first flight on STS-60, in 1994, although experiencing a hardware problem that resulted in the vehicle remaining attached to the robot arm, proved the vacuum wake concept, and realized the space epitaxy

concept by growing the first-ever crystalline semiconductor thin films in the vacuum of space.

The major objective of this third flight aboard STS-80 is to grow thin "epitaxial" films which could have a significant impact on the microelectronics industry because the use of advanced semiconducting thin film materials in electronic components holds a very promising economic advantage. The commercial applications for high quality semiconductor devices are most critical in the consumer technology areas of personal communications systems, fiber optic communications, high-speed transistors and processors, and opto-electronic devices.

The majority of electronic components used today are made of silicon semiconductors; however, there are many other semiconductors, principally compound semiconductors, that have higher predicted performance than silicon. Epitaxy, growing atomically ordered thin films in a vacuum environment, is one method of generating such advanced semiconductor materials. A prime barrier to improving epitaxial films is the limit on the quality of the vacuum which can be generated in an industrial growth chamber. To improve the material, the vacuum in which it is grown must be improved. A wake-generating satellite can provide this enhancement in vacuum conditions.

The WSF consists of the Cross Bay Carrier and the Free Flyer. The Carrier remains in the Shuttle payload bay and has a latch system which holds the Free Flyer to it. Weighing approximately 9,300 pounds, (the Free Flyer itself is 4,625 pounds), the WSF occupies one quarter of the Shuttle payload bay. The Shuttle Remote Manipulator System (RMS), is used to remove the Free Flyer from the Carrier and deploy it for free flight in space.

The WSF follows behind Columbia at a station-keeping distance of approximately 25 nautical miles. The Free Flyer is a fully-equipped spacecraft, with cold gas propulsion for separation from the Shuttle and a momentum bias attitude control system. Seventy-two kilowatt-hours of energy, stored in silver-zinc batteries, power the thin-film growth furnaces, substrate heaters, process controllers, and a sophisticated array of vacuum characterization devices, including mass spectrometers and total pressure gauges.

Flight plans call for WSF-3 to be deployed on Flight Day 4. Rendezvous is planned for Flight Day 7 with operations and investigations continuing in the payload bay for an additional day.

A number of cooperative payloads are flying in conjunction with WSF-3. For further information on these experiments, and for more detailed information on the mission and the Space Vacuum Epitaxy Center itself, please access the Internet at the following addresses:

http://www.svec.uh.edu/wsf.html
or http://www.svec.uh.edu/svec.html.

At the University of Houston, the Wake Shield Program Manager is:

Dr. Alex Ignatiev, Director
Space Vacuum Epitaxy Center
University of Houston, Houston, TX 77204-5507
Voice: 713/743-3621
Fax: 713/747-7724
e-mail: Ignatiev@uh.edu

Wake Shield Facility Deploy and Rendezvous

The Wake Shield Facility will be deployed using Columbia's robotic arm on Flight Day 4 by Mission Specialist Tom Jones. After Jones locks the arm onto the WSF's grapple fixture, he will release latches that hold the satellite in Columbia's cargo bay and lift it out. He will then maneuver the WSF into a position extended above and to the port side of the cargo bay with the satellite's underside facing into Columbia's direction of travel. This position, which may be held for as long as two and a half hours, will allow atomic oxygen molecules scattered in low Earth orbit to "cleanse" the underside of the satellite in preparation for its free-flying experiment operations.

Once the atomic oxygen exposure is completed, Jones will maneuver the satellite above and to starboard of the cargo bay, with the underside of the satellite facing away from Columbia's direction of travel, to check out WSF's Automatic Data Acquisition and Control System (ADACS). This orientation is similar to the orientation the satellite will keep while flying free from the Shuttle.

After checkout of the ADACS is completed, Jones will raise the WSF high above the cargo bay, with the underside facing away from the Shuttle's direction of travel, and release it.

Proximity Operations with WSF-3 and ORFEUS-SPAS-2

The WSF will fly free from Columbia for three days, and during that time, the ORFEUS-SPAS also will be flying free from Columbia. At the time the WSF is released, Columbia will be about 50 nautical miles ahead of ORFEUS-SPAS. WSF will fire thrusters to begin a slow separation, with the WSF trailing Columbia along with ORFEUS-SPAS. The WSF will reach a maximum distance of approximately 20 nautical miles from Columbia and no less than 25 nautical miles from ORFEUS-SPAS during its free-flight.

While the WSF and ORFEUS-SPAS are both in free-flight, Columbia may perform as many as two small engine firings per day to maintain the proper distance from the satellites. The WSF also may fire a thruster daily to maintain its position. Once the WSF has been retrieved on Flight Day 7, Columbia will maintain a distance of about 25 nautical miles from ORFEUS-SPAS until it is retrieved on Flight Day 14.

STS-80 EXTRAVEHICULAR ACTIVITIES

EVA Development Flight Tests (EDFT)

Astronauts Tammy Jernigan and Tom Jones will perform two six-hour spacewalks during STS-80, one on Flight Day 10 and another on Day 12, to evaluate equipment and procedures that will be used during construction and maintenance of the International Space Station.

The spacewalks are the fifth in a continuing series of Extravehicular Activities (EVAs) called the EVA Development Flight Tests (EDFT). This flight test series of spacewalks is designed to evaluate equipment and procedures planned for the station and to build spacewalking experience in preparation for assembly of the station. Jernigan is designated Extravehicular Crewmember 1 (EV-1) and will be distinguished by red bands worn on the legs of her spacesuit. Jones is designated EV-2. Astronaut Story Musgrave will serve as the Intravehicular (IV) crewmember, assisting Jernigan and Jones from inside Columbia's crew cabin. STS-80 Pilot Kent Rominger also will assist with the spacewalks, controlling the robotic arm from inside the cabin.

On the first spacewalk, an end-to-end demonstration of a maintenance task simulating the changing out of an International Space Station battery will be performed. A crane designed for use in moving large Orbital Replacement Units (ORUs) on the space station will be evaluated as part of the task. ORUs can be any piece of equipment that may be replaced on the station's exterior, and, for this evaluation, the simulated station battery will be moved using the crane.

The evaluation should take almost three hours of the first spacewalk. Following the large-ORU evaluation, the astronauts will evaluate the crane's ability to move a small ORU, a cable caddy that previously was used during an STS-72 spacewalk.

The second spacewalk will evaluate working with the simulated battery from a mobile platform designed for the end of the International Space Station's robotic arm. Both spacewalkers will evaluate working with the simulated battery from the platform, which will be attached to the end of Columbia's robotic arm, for a total of almost two hours each.

The astronauts also will evaluate a variety of other work aids and tools designed for use during station operations, including a Body Restraint Tether (BRT), a type of "third hand" stabilizing bar for spacewalkers; a Multi-Use Tether (MUT), a type of stabilizing tether similar to the BRT that can be anchored to either round U.S. handrails or square Russian handrails; and a power tool designed for the station.

Detailed descriptions of the major items to be evaluated:

Crane

The 156-pound crane is 6 feet tall and has a boom that telescopes from lengths of 4 feet to 17.5 feet. It is designed to aid spacewalkers in transporting objects with a mass as great as 600 pounds to various worksites on the International Space Station's truss.

The crane boom's attachment mechanism may also provide temporary stowage for large units during maintenance. The crane will be unstowed and installed to a socket along the left middle side of Columbia's cargo bay for the evaluations. The crane's boom can be extended by turning a ratchet fitting using a power tool or by using a manually operated hand crank. The crane can also be moved from side to side and up and down by hand cranks.

Battery Orbital Replacement Unit

A simulated battery for the International Space Station will be used for evaluations performed during STS-80 because the batteries will be among the most massive station ORUs. The station batteries will be mounted on the truss near the solar arrays and will provide power when the station moves into night on each orbit. The object to be used during STS-80 is not a real battery, although its size, 41 x 39 x 19 inches, and mass, about 354 pounds, closely imitate a station battery. It is also stowed in Columbia's cargo bay in fittings similar to those planned for stowing such replacement units during space station operations.

Cable Caddy

The Cable Caddy is a small carrier designed to hold about 20 feet of replacement electrical line for the space station. The operations of the Cable Caddy were flight-tested on STS-72, and on STS-80 it will be used only to simulate a small ORU for the space station. No cable will be unwound. The Cable Caddy has a mass of almost 50 pounds.

Portable Work Platform

The platform, a mobile EVA worksite designed for the end of the International Space Station's mechanical arm, was first flight-tested on STS-72. Similar to the platform used at the end of the Shuttle arm during past spacewalks, such as those to service the Hubble Space Telescope on STS-61, the platform offers greater movement with a swiveling foot restraint; a storage location for tools and temporary storage for large space station ORUs.

The platform is composed of several components. An Articulating Portable Foot Restraint, a foot platform that can be swiveled to various orientations using two foot pedals, allows a spacewalker to reposition the platform without dismounting. A Portable Foot Restraint Work Stanchion (PFRWS) holds tools and equipment. A Temporary Equipment Restraint Aid (TERA) will hold large ORUs. Jernigan and Jones will evaluate the platform by using it mounted at the end of Columbia's mechanical arm to perform operations with the simulated station battery.

Body Restraint Tether

The Body Restraint Tether (BRT) seeks to provide the astronaut with a "third hand" to add stability while working. The tether is designed to hold a spacewalker steady when clamped to a handrail, freeing the astronaut's hands for work. It was first flown

on STS-69 and further evaluated on STS-72. The tether should provide a quick method of supplying stability for a spacewalker when a foot restraint is not available.

Multi-Use Tether

The Multi-Use Tether (MUT) is similar to the BRT, but it has can perform a greater variety of tasks. Different end effectors can be attached to the tether to grip station ORUs, various spacewalking tools or handrails.

SPACE EXPERIMENT MODULE

The Space Experiment Module (SEM) is a NASA Goddard Space Flight Center Shuttle Small Payloads Project education initiative that provides increased educational access to space. The program targets kindergarten through university level participants. SEM stimulates and encourages direct student participation in the creation, development, and flight of zero-gravity and microgravity experiments on the Space Shuttle.

The SEM system provides reusable modules for experiments within a 5-cubic-foot Getaway Special Canister. The system uses a Goddard-provided internal support structure, battery, power distribution system, data sampling and storage device and harness. Experiments may be active (requiring power to run mechanisms) or passive (having no mechanisms or requiring no power). Customized data sampling schemes are programmed before flight for each experiment, and data reduction and processing are completed after flight.

SEM's first flight includes a number of experiments sponsored by the Charleston, SC, school district (CAN-DO). Their experiments include Gravity & Acceleration Readings, Bacteria-Agar Research Instrument, Crystal Research in Space, Magnetic Attraction Viewed in Space, and numerous passive items such as algae, bones, yeast, and photographic film.

Purdue University in West Lafayette, IN, also is sponsoring a number of experiments: Fluid Thermal Convection, NADH Oxidase Absorbence in Shrimp, and a Passive Particle Detector experiment. Hampton Elementary School in Lutherville, MD, is experimenting with seeds, soil, chalk, crayon, calcite, Silly Putty, bubble solution, popcorn, mosquito eggs, and other organic compounds.

Glenbrook North High School in Northbrook, IL, has a Surface Tension experiment. Albion Jr. High in Strongville, OH, is flying a heat transfer experiment and will study the heating properties of copper tubes and pennies. Poquoson Middle School in Poquoson, VA, will conduct a Bacteria Inoculation in Space experiment and NORSTAR (Norfolk Public Schools Science and Technology Advanced Research) in Norfolk, VA, will observe the behavior of immiscible fluids.

The SEM mission manager and project engineer is Dr. Ruthan Lewis of the Shuttle Small Payloads Project at Goddard Space Flight Center, Greenbelt, MD. The SEM Home Page on the World Wide Web may be accessed directly at:

http://sspp.gsfc.nasa.gov/sem.html

NIH-R4

NIH-R4 is the fourth in a series of collaborative experiments developed by NASA and the National Institutes of Health. NASA's Ames Research Center, Mountain View, CA, is the experiment developer.

Principal investigators of the NIH-R4 experiment, "Calcium, Metabolism and Vascular Function After Space Flight," are Drs. David McCarron and Daniel Hatton of the Oregon Health Sciences University, Portland. For many years, they have investigated the role of calcium in blood pressure regulation. Calcium has long been recognized as a critical mineral in the normal development and function of bone and muscle. These researchers were among the first to demonstrate that calcium also is essential for normal cardiovascular function.

In the microgravity environment, there is an overall loss of calcium from the body, associated with well-documented decreases in bone and muscle mass. Changes in cardiovascular function also have been noted, although the role of calcium in cardiac function in microgravity has not been investigated.

This flight experiment will study blood pressure regulation and function in rats fed either a high- or a low-calcium diet before and during space flight. Seven rats with genetically induced hypertension will be housed in each of two enclosures, which fit in lockers in the Space Shuttle's middeck. The high-calcium diet will be available in one enclosure and the low-calcium diet in the other. The researchers expect that the high calcium diet will be beneficial in maintaining good cardiovascular function (as well as bone and muscle mass), while the low calcium diet will exaggerate the effects of microgravity.

This study will add to the body of knowledge necessary to maintain the health of astronauts during space flight. In addition, it will add new and exciting data to a growing body of evidence that calcium is a mineral with myriad functions critical to the normal function of human life on Earth.

The NIH-R4 investigators previously investigated pregnancy-induced hypertension (elevated blood pressure). Their studies have shown that during pregnancy, when there is a large requirement for calcium during development of the fetus, increasing the intake of calcium in the diet reduces the elevated blood pressure often seen in pregnant women. Using rats with genetically induced hypertension, they investigated the chemical and biological mechanisms by which calcium produces these beneficial effects. Other studies have shown that calcium is important in preventing the development of high blood pressure in normal humans and rats. Finally, studies by other researchers have shown that increased dietary calcium can reduce blood levels

of cholesterol, reduce the symptoms of premenstrual syndrome and be beneficial in the treatment of osteoporosis.

CCM-A (formerly STL/NIH-C-6)

NASA/CCM-A is one in a series of bone cell experiments to be conducted aboard the Space Shuttle. Results from a previous Shuttle flight, **NIH.C4** on STS-69, indicate that bone is affected by microgravity at the cellular level. The investigators participating in the STS-80 CCM-A mission hope to confirm their previous findings, and further test the hypothesis that the absence of gravity has a negative effect on bone formation.

Weightlessness results in bone loss in astronauts, similar to what occurs in people who undergo prolonged bed rest or, in some cases, lose the use of one of their limbs due to injury or disease. The exact cause of the bone loss is not yet clear, but it is at least partially due to decreased activity of osteoblasts, the cells which produce the matrix which mineralizes to become bone. Weightlessness results in similar decreased bone formation in both rodents and humans.

Studies performed on rats implicate transforming growth factor-b (TGF-b) as having an important role in decreased bone formation during space flight. TGF-b, a protein produced by bone cells, is important in the communication between cells. The gene for TGF-b was found to be expressed in bone at a reduced level following space flight, but the level was dramatically increased (within 24 hours) when normal activity was reestablished following space flight.

This experiment to be flown on STS-80 will determine if TGF-b gene expression is reduced in cultured bone cells following space flight and how quickly the levels of TGF-b return to normal after flight. Results from this experiment will help us determine the usefulness of cultured bone cells in understanding how the acceleration due to gravity functions to maintain bone cell activity. Although cultured bone cells have enormous potential to be used to increase our understanding, there are many pitfalls. Unless the culture can be shown to mimic a response occurring in the whole organism, it will not be possible to interpret the relevance of the findings.

The cells to be used in this study are unique. They are derived from human bone and are normal in the sense that they are not transformed (tumor-cell-like). The cells have been genetically altered to allow them to grow nearly indefinitely at a low temperature (35 degrees F, 161 C) but when cultured at a higher temperature (39) they stop growing and become mature osteoblasts that synthesize bone matrix. This experiment will study the effects of weightlessness and recovery on the mature form of the osteoblast-like cells.

The Principal Investigator for this study is Dr. Russell T. Turner of the Mayo Clinic, Rochester, MN. The co-investigators are Drs. Thomas C. Spelsberg and Steven A. Harris, also of the Mayo Clinic.

Osteoblast adhesion and phenotype in microgravity

Bone loss during space flight is well documented, but remains incompletely understood. Among the unanswered questions are the direct effects that microgravity exerts on bone cells, and the mechanisms by which these cells recognize changes in gravity. This study will focus on bone cells of the osteoblast family, which synthesize bone matrix and also may participate in its breakdown (resorption) by regulating the formation and activity of bone-resorbing cells, osteoblasts.

Because osteoblastic cells are direct targets for breakdown-stimulating agents like parathyroid hormone (PTH), the experiment will test the hypothesis that microgravity can produce direct effects on osteoblastic cells similar to those of PTH. In addition, the study will examine whether microgravity alters the interaction of osteoblastic cells with their matrix, resulting in changes in shape or cellular organization known to affect the function of numerous cell types.

In this study, a permanent line of osteoblastic cells will be cultured in the middeck compartment of the Space Shuttle. Parallel control cells will be maintained on Earth under identical conditions. During flight, batches of both control and experimental cells will be fixed for analysis and samples of culture medium will be collected for biochemical studies. Following the flight, the cells will be analyzed to identify changes in shape and function. Medium samples will be analyzed to identify the presence of bone matrix proteins and matrix-degrading enzymes that may participate in early stages of bone turnover.

The principal investigator of this study is Dr. Robert Majeska, Department of Orthopaedics, Mount Sinai School of Medicine, New York; the co-investigator is Dr. Sandra Masur, Department of Ophthalmology at Mount Sinai. The project is sponsored by NASA's Office of Life and Microgravity Sciences and Applications Small Payloads Program, and the National Institute of Arthritis and Musculoskeletal Diseases.

BIOLOGICAL RESEARCH IN CANISTER (BRIC)-09 EXPERIMENT

Research on the effects of genetic expression and microgravity on plants will help improve growth rates and biomass production of plants grown in space and may enhance crop productivity on the Earth.

Although various effects of microgravity on plants have been observed, little is known about the underlying mechanisms involved. BRIC-09 will study the influence of microgravity on genetically altered tomato and tobacco seedlings that have been modified to contain elements of soybean genes. This study should provide information about plants' molecular biology and insight into understanding the transport and distribution mechanisms for hormones within plants. The proposed research could provide crucial information on how to improve growth rates and biomass production of

space-grown plants as well as information on how to enhance crop productivity on the Earth.

The basic hypothesis of the research is that alterations in genetic expression should be responsible for many changes in growth and development of microgravity-grown plants. The proposed research should identify the mechanisms involved in these changes at the molecular level.

The principal investigator will observe genetic changes in the altered tomato and tobacco seedlings as molecular markers to study the effects of microgravity on the plants' development.

The principal investigator is Dr. Yi Li, Kansas State University, Division of Biology, Manhattan, KS.

The experiment uses approximately 200 seeds evenly distributed on the Nylon membrane inside 22 petri dishes, which will be loaded into five BRIC-60 canisters. Ground controls will be run at the Kennedy Space Center with a 48-hour delay. Some plant material will be fixed or frozen for microscopic and enzymatic analysis. Some material will be stained so it can be detected by light microscopy. Some material will be photographed and fixed for morphology studies.

Two types of genes will be isolated: one is the genes whose expression is eliminated or reduced under the microgravity environment, and the other are the ones whose expression is enhanced under the microgravity environment.

The proposed research will provide information that will help improve growth rates and biomass production of plants grown in space and may enhance crop productivity on the Earth. The improvement of growth rate and biomass production of space-grown plants is particularly useful for the development of life support systems to support crews over long-duration flights. The improvement of growth and biomass production of space-grown plants is also an important step toward commercial application of space using plants as bioreactors for pharmaceutical products and for other commercial purposes.

COMMERCIAL MDA ITA EXPERIMENT (CMIX-5)

CMIX-5 is the last in a series of five Shuttle flights linking NASA and the University of Alabama/Huntsville (UAH) Consortium for Materials Development in Space, with flight hardware privately developed by Instrumentation Technology Associates (ITA) of Exton, PA.

UAH research will include diabetes treatment; cell reaction in microgravity that may lead to tissue replacement techniques; the development of gene combinations that are toxic to insect pests but not harmful to other species, thus creating a natural pesticide; and an environmental monitoring model using mysid shrimp.

A key activity for ITA will be the ongoing effort to grow large protein crystals of urokinase for research linked to breast cancer inhibitors. There will also be an ITA

materials analysis study to see if the use of sealants in microgravity can lead to better protection of national monuments against acid rain. ITA also is sponsoring seven elementary and high school research activities as well as experiments linked to the National Space Society and the International Space University.

Three flight hardware elements will be used on CMIX-5. The Bioprocessing Modules developed by UAH are valves connected by tubing to syringes containing research samples. ITA's hardware consists of a Liquid Mixing Apparatus, vial containers to mix multiple fluids and an enhancement of their materials dispersion apparatus. The Dual Materials Dispersion Apparatus (DMDA) experiment container increases the number of data points and also provides video capability to record changes in the research samples as they develop. CMIX-5 will employ three DMDA labs containing more than 900 experiments. The CMIX contacts are:

JOHN CASSANTO, ITA AT 610/363-8343

MARIAN LEWIS, UAH AT 205/890-6553

VISUALIZATION IN AN EXPERIMENTAL WATER CAPILLARY PUMPED LOOP (VIEW-CPL)

Capillary Pumped Loop (CPL) technology, to be flown on Columbia's middeck, is an option for spacecraft thermal management. A CPL collects and transports excess heat generated by spacecraft instruments. The heat is transported to a spacecraft radiator for rejection into space. Requiring no mechanical pump, a CPL can transport more energy for longer distances than heat pipes currently used today.

The purpose of the STS-80 experiment is to help develop a complete understanding of CPL physics in a microgravity environment by viewing the fluid flow inside the evaporator. The liquid and vapor visual data, collected on video tape through a special window in the evaporator, along with temperature and pressure data, will be used to refine theories on CPL operation modes. The ultimate goal is to apply the results of this experiment to improve CPLs of the future.

VIEW-CPL was developed by the Department of Mechanical Engineering at the University of Maryland, College Park, as part of NASA's In-Space Technology Experiment Program (IN-STEP). For further information on VIEW-CPL, please contact: Dr. Keith E. Herold via e-mail at herold@eng.umd.edu or Kimberly R. Kolos at krkolos@glue.umd.edu

CREW BIOGRAPHIES

Kenneth D. Cockrell will serve as Commander (CDR) for STS-80. Cockrell was born on April 9, 1950, in Austin, TX. He graduated from Rockdale High School, Rockdale, TX, in 1968, received a bachelor of science degree in mechanical engineering from the University of Texas in 1972 and a master of science degree in aeronautical systems from the University of West Florida in 1974.

Cockrell was selected as an astronaut by NASA in January 1990 and became qualified for a flight assignment July 1991. A veteran of two space flights, STS-56 in 1993 and STS-69 in 1995, he has logged over 482 hours in space.

Kent V. Rominger (Commander, USN) will serve as Pilot (PLT) on Mission STS-80. Rominger was born on August 7, 1956, in Del Norte, CO. He graduated from Del Norte High School in 1974, received a bachelor of science degree in civil engineering from Colorado State University in 1978 and a master of science degree in aeronautical engineering from the U.S. Naval Postgraduate School in 1987.

Rominger reported to the Johnson Space Center in August 1992 and after completing the one year of required training became qualified for future flight assignment. He made his first space flight from Oct. 20 to Nov. 5, 1995, on STS-73 during which Rominger served as pilot. Rominger has logged a total of 15 days, 21 hours, 52 minutes and 21 seconds in space.

Tamara E. Jernigan (Ph.D.) will serve as Mission Specialist-1 (MS-1) on STS-80. Jernigan was born on May 7, 1959, in Chattanooga, TN. She graduated from Santa Fe High School, Santa Fe Springs, CA, in 1977, received a bachelor of science degree in physics (with honors) and a master of science degree in engineering science from Stanford University in 1981 and 1983. Jernigan also earned a master of science degree in astronomy from the University of California-Berkeley in 1985 and a doctorate in space physics and astronomy from Rice University in 1988.

Jernigan was selected as an astronaut candidate by NASA in June 1985 and became an astronaut in July 1986. A veteran of three space flights, Jernigan was a mission specialist on STS-40 in 1991 and STS-52 in October 1992. She was the payload commander on STS-67 in March 1995 and has logged over 854 hours in space.

Thomas D. Jones (Ph.D.) will serve as Mission Specialist-2 (MS-2) on STS-80. Jones was born January 22, 1955, in Baltimore, MD. He graduated from Kenwood Senior High School, Essex, MD, in 1973, and received a bachelor of science degree in basic sciences from the United States Air Force Academy in Colorado Springs in 1977, and a doctorate in planetary science from the University of Arizona in Tucson in 1988.

After a year of training following his selection by NASA in January 1990, Dr. Jones became an astronaut in July 1991. In 1994 he flew as a mission specialist on successive flights of Space Shuttle Endeavour and the Space Radar Laboratory payload. His first flight was in April 1994 on STS-59 and then in October 1994 on STS-68. Dr. Jones has logged over 22 days (539 hours) in space.

Story Musgrave (M.D.) will serve as Mission Specialist-3 (MS-3) on STS-80. Musgrave was born on August 19, 1935, in Boston, MA, but considers Lexington, KY, to be his hometown. He graduated from St. Mark's School, Southborough, MA, in 1953, received a bachelor of science degree in mathematics and statistics from Syracuse University in 1958, a master of business administration degree in operations analysis and computer programming from the University of California at Los Angeles

in 1959, a bachelor of arts degree in chemistry from Marietta College in 1960, a doctorate in medicine from Columbia University, New York, NY, in 1964, a master of science in physiology and biophysics from the University of Kentucky in 1966, and a master of arts in literature from the University of Houston in 1987.

Musgrave was selected as a scientist-astronaut by NASA in August 1967. A veteran of five space flights, Dr. Musgrave was a mission specialist on STS-6 in 1983, STS 51-F in 1985, STS-33 in 1989 and STS-44 in 1991. He was the payload commander on STS-61 in 1993 and currently has more than 858 hours in space.

Musgrave's sixth flight into space aboard Columbia on STS-80 will have two noteworthy aspects to it. First, he will tie NASA astronaut John Young's record for most number of space flights by any human being. Secondly, at age 61, Musgrave will be the oldest person ever to fly in space.

96-207

NATIONAL AERONAUTICS AND SPACE ADMINISTRATION

1996 Mars Missions

Press Kit
November 1996

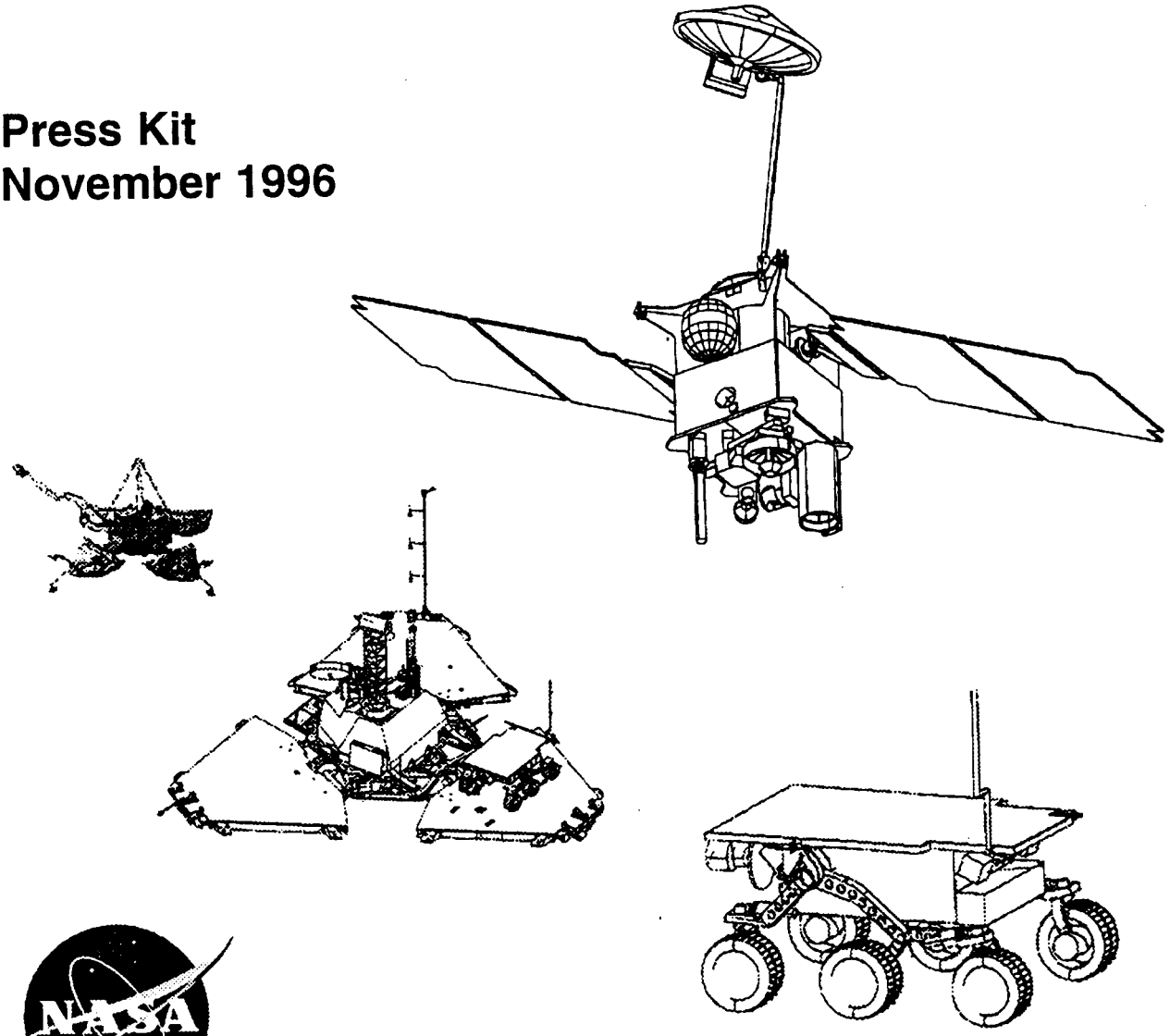

REPRODUCED AT GOVT. EXPENSE

Contacts

Douglas Isbell Headquarters, Washington, DC	Policy/Program Management	202/358-1753
Franklin O'Donnell Jet Propulsion Laboratory, Pasadena, CA	Mars Global Surveyor and Mars Pathfinder Missions	818/354-5011
George Diller Kennedy Space Center, FL	Launch Operations	407/867-2468

Contents

General Release 3
Media Services Information 6
Quick Facts 7
Mars at a Glance 9
Historical Mars Missions 10
Why Mars? 11
The Multi-Year Mars Program 15
Mars Global Surveyor 18
- Mission Overview 19
- Spacecraft 26
- Science Objectives 27

Mars Pathfinder 30
- Mission Overview 30
- Spacecraft 40
- Science Objectives 43

Mars '96 48
- Mission Overview 48
- Spacecraft 54
- Science Objectives 54
- U.S. Contributions to Mars '96 56

Program/Project Management 59

REPRODUCED AT GOVT. EXPENSE

RELEASE: 96-207

THREE MARS MISSIONS TO LAUNCH IN LATE 1996

The United States and Russia return to Mars this fall with the launch of three missions destined to explore Earth's planetary neighbor in greater detail than has ever before been accomplished.

NASA's Mars Global Surveyor and Mars Pathfinder and Russia's Mars '96 mission are scheduled for three separate launches in November and December 1996. Mars Global Surveyor, an orbiter carrying six scientific instruments to study the atmosphere, surface and interior of Mars, will be launched Nov. 6. It will be followed by Russia's Mars '96, an orbiter carrying 12 instruments plus two small landers and two penetrators, which will lift off Nov. 16. Mars Pathfinder will carry a lander and small rover robot when it is lofted into space Dec. 2.

Launch of the NASA spacecraft marks the beginning of a new era in Mars exploration and an ambitious new initiative by the United States to send pairs of spacecraft to the red planet every 26 months through the year 2005.

NASA's new decade-long program of robotic exploration — known as the Mars Surveyor program — takes the next step in expanding scientists' knowledge of Mars. The program is focused on three major areas of investigation: the search for evidence of past life on Mars; understanding the Martian climate and its lessons for the past and future of Earth's climate; and understanding the geology and resources that could be used to support future human missions to Mars.

The unifying theme of the Mars exploration program is the search for water, which is a key requirement for life, a driver of climate and a vital resource. Early missions will thus focus partially on finding and understanding the past and present state of water on Mars. Mars Global Surveyor and Mars Pathfinder will be the forerunners in this quest, becoming the precursors to a series of missions that may culminate in the first few years of the next century with robotic return of a Martian soil sample to Earth, followed by eventual human exploration.

Continuing Exploration Program

NASA's 1996 missions to Mars further the global explorations of the planet begun in 1965 with the Mariner 4 mission to Mars and continued in the mid-'70s by the Viking lander missions.

From earlier investigations, scientists have compiled a portrait of Mars full of stark contrasts. Mars' surface features range from ancient, cratered terrain like Earth's Moon to immense volcanoes that would dwarf Mt. Everest and a canyon that would stretch across the United States.

REPRODUCED AT GOVT. EXPENSE

Mars' atmosphere is less than 1 percent as thick as Earth's, but there are permanent polar caps with reservoirs of water ice. Closeup shots of Mars' terrain resemble that of an Earthly desert, with surface features that look like river channels carved long ago by flowing water.

The next step in Mars exploration, according to scientists, is to obtain an overview of the entire planet and to verify remote observations with measurements taken from the ground. Mars Global Surveyor is designed to study the atmosphere, surface and interior systematically over a full Martian year. The Russian Mars '96 orbiter has similar objectives, but will also characterize the uppermost atmosphere and its interactions with the solar wind.

To obtain "ground truth" -- observations on the surface verifying those made from space -- the Russian Mars '96 spacecraft will deploy two landers that will touch down in the northern hemisphere in a region called Amazonis Planitia and two penetrators that will impact and lodge themselves anywhere from 3 to 20 feet (1 to 6 meters) underground. These probes will furnish details of the atmosphere and surface at the specific locations in which they land. NASA is contributing two experiments to Mars '96: the Mars Oxidation Experiment, which will measure the oxidation rate of the Martian environment, and the Tissue-Equivalent Proportional Counter, which will study the radiation environment in interplanetary space and near Mars.

Mars Pathfinder will deploy a mobile rover that will characterize rocks and soil in a landing area over hundreds of square yards (or meters) on Mars. Pathfinder's instruments and mobile rover are designed to provide an in-depth portrait of Martian rocks and surface materials over a relatively large landing area, thereby giving scientists an immediate look at the crustal materials that make up the red planet.

Pathfinder Arrival in July 1997

Although the last to leave Earth, Mars Pathfinder takes a shorter flight path and will be the first of the three spacecraft to arrive at Mars, touching down in Ares Vallis on July 4, 1997.

Pathfinder is designed to demonstrate an innovative approach to landing a spacecraft and rover on the surface of Mars. Pathfinder will dive through the upper atmosphere of Mars on a parachute, then inflate a huge cocoon of airbags to cushion its impact. The spacecraft will collect engineering and atmospheric science data along its descent to the ground.

The primary objective of the mission is to test this low-cost method of delivering a spacecraft, science payload and free-ranging rover to the surface of the red planet. Landers and rovers of the future will share the heritage of spacecraft designs and technologies that evolve from this pathfinding mission.

Once on the surface, the lander's first task will be to transmit engineering and science data collected during descent through the thin atmosphere of Mars. Then its camera will take a panoramic image of its surroundings and begin transmitting the data directly to Earth at a few

REPRODUCED AT GOVT. EXPENSE

thousand bits per second. Much of Pathfinder's mission after this will be focused on collecting atmospheric and surface composition data, and supporting the rover by storing and transmitting images captured by its cameras. Pathfinder's nominal mission lifetime is approximately 30 "sols," or Martian days (about the same number of Earth days).

Pathfinder's rover, Sojourner, will be carried to Mars in a stowed configuration with its chassis and wheels folded up like an accordion. Once its solar cells are exposed to the Sun, the rover will power up and stand to its full height before leaving the lander. Driving off onto the floor of an ancient flood plain believed to contain a wide variety of rocks, Sojourner will explore the surface independently, relying on the lander primarily for communications with Earth.

Mars Global Surveyor and Mars '96

Two months later, NASA's Mars Global Surveyor and Russia's Mars '96 orbiter will arrive at Mars on September 11 and 12, 1997, respectively.

At first, Mars Global Surveyor will be in a highly elliptical orbit and spend four months dipping lower and lower into Mars' upper atmosphere using a technique called aerobraking to bring it into a low-altitude, nearly circular mapping orbit over the poles. By March 1998, Surveyor will be ready to begin data collection, compiling a systematic database as it surveys the Martian landscape and photographs unique features, such as the polar caps and Mars' network of sinuous, intertwining river channels.

Mars '96 carries a dozen instruments and a dozen smaller devices designed to study the evolution of the Martian atmosphere, surface and interior. In addition to meteorological and seismic instruments, the spacecraft carries instruments to image the Martian surface, explore the chemistry and water content of rocks and attempt to detect and measure the Martian magnetic field.

The Jet Propulsion Laboratory manages the Mars Pathfinder and Mars Global Surveyor missions for NASA's Office of Space Science, Washington, DC. Lockheed Martin Astronautics Inc., Denver, CO, is NASA's industrial partner for development and operation of the Mars Global Surveyor spacecraft. Russia's Mars '96 is managed by the Russian Space Agency. The Russian Academy of Sciences, Moscow, Russia, is responsible for the Mars '96 science payload.

[End of General Release]

REPRODUCED AT GOVT. EXPENSE

Media Services Information

NASA Television Transmission

NASA Television is available through the Spacenet 2 satellite on transponder 5, channel 9, 69 degrees west longitude, frequency 3880 MHz, audio subcarrier 6.8 MHz, horizontal polarization. The schedule for television transmissions during the launch periods in November and December 1996 will be available from the Jet Propulsion Laboratory, Pasadena, CA; Kennedy Space Center, FL; and NASA Headquarters, Washington, DC.

Status Reports

Status reports on mission activities for Mars Global Surveyor and Mars Pathfinder will be issued by the Jet Propulsion Laboratory's Public Information Office. They may be accessed online as noted below.

Briefings

A pre-launch briefing on the missions and science objectives of Mars Pathfinder and Mars Global Surveyor will air on NASA Television on Oct. 16, 1996, originating from NASA Headquarters, Washington, DC. Pre-launch briefings at Kennedy Space Center will be held the day before each of the two American launches.

Internet Information

Extensive information on Mars Global Surveyor and Mars Pathfinder, including an electronic copy of this press kit, press releases, fact sheets, status reports and images, is available from the Jet Propulsion Laboratory's World Wide Web home page at **http://www.jpl.nasa.gov**. This site may also be accessed via Internet using anonymous file transfer protocol (FTP) at the address **ftp.jpl.nasa.gov**. For users without Internet access, the site may additionally be accessed by dialup modem at the telephone number 818/354-1333.

REPRODUCED AT GOVT EXPE

Quick Facts

Mars Global Surveyor

Spacecraft dimensions: Bus 5 by 5 by 10 feet (1.5 by 1.5 by 3 meters); 40 feet (12 meters) across with fully deployed solar panels
Weight: 2,337 pounds (1,060 kilograms) with fuel
Science instruments: thermal emission spectrometer; laser altimeter; magnetometer/electron reflectometer; ultra-stable oscillator; camera; radio relay system
Launch date: November 6, 1996; period continues through November 25
Mars arrival date: September 11, 1997; primary mission March 15, 1998-January 31, 2000

Mars Pathfinder

Lander

Spacecraft dimensions: Tetrahedron, three sides and base, standing 3 feet (0.9 meter) tall
Weight: 1,962 pounds (890 kilograms) dry; 2,062 pounds (990 kilograms) with fuel
Science instruments: imager; magnets for measuring magnetic properties of soil; wind sock; atmospheric structure instrument/meteorology package.
Launch date: December 2, 1996; period continues through December 31, 1996
Mars arrival date: July 4, 1997
Primary mission: 30 days

Rover

Rover dimensions: 2 feet (65 cm) long by 1.5 feet (48 cm) wide by 1 foot (30 cm) tall
Weight: 22 pounds (10 kilograms)
Science instruments: alpha proton x-ray spectrometer; 3 cameras; also technology experiments
Primary mission: 7 days

Mars '96

Orbiter

Spacecraft dimensions: 10 by 20 by 29.5 feet (3 by 3 by 9 meters) tall
Weight: 13,200 pounds (6,000 kilograms) with fuel
Science instruments: 12 instruments and 12 devices
Launch date: November 16, 1996; window continues through November 22
Mars arrival date: September 12, 1997
Primary mission: 2 years

Surface stations (2)

Dimensions: During cruise, 3.2 by 3.2 feet (1 by 1 meter); landed and deployed, about 3.5 by 2 feet (1.08 by 0.59 meters)
Weight: 110 pounds (50 kilograms) each

Penetrators (2)

Dimensions: 6.4 feet (2 meters) long by 1.9 feet (0.6 meter) in diameter each
Weight: 143 pounds (65 kilograms) each

REPRODUCED AT GOVT EXPENSE

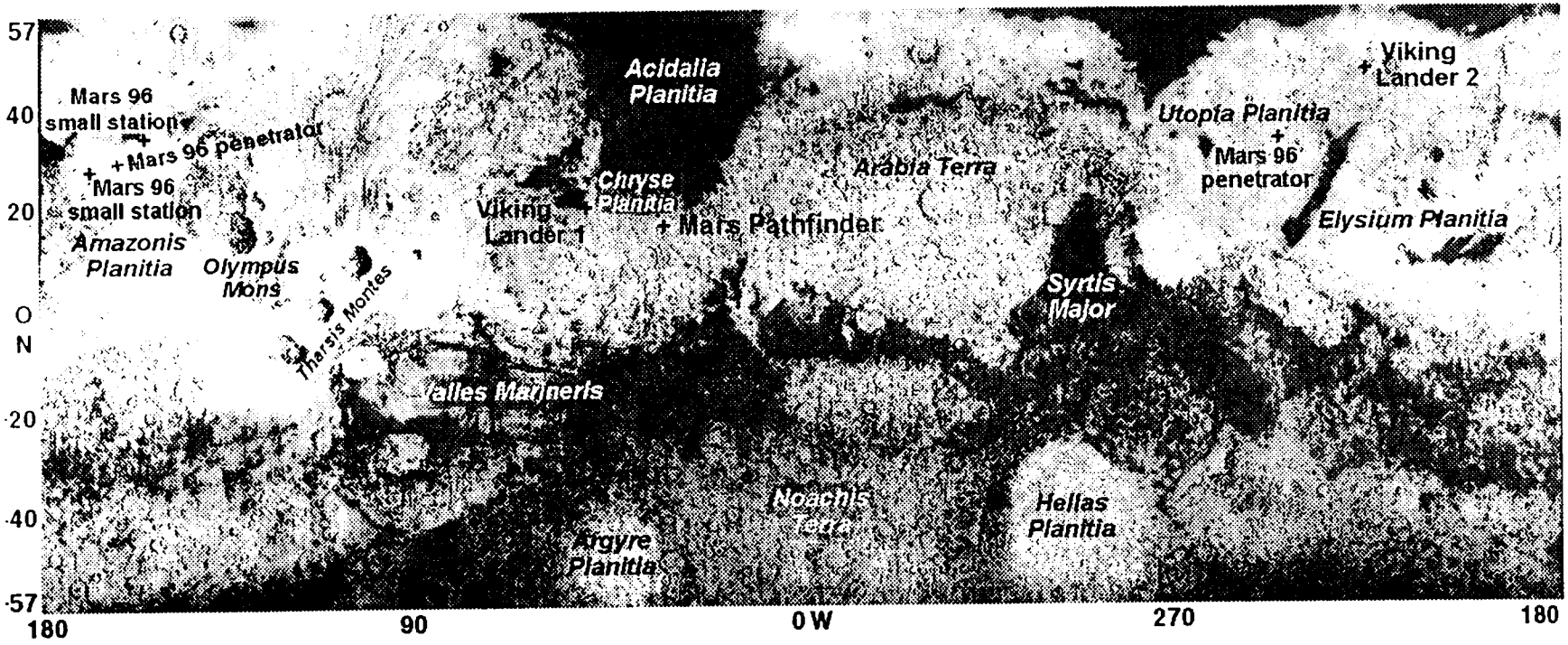

Mars Landing Sites

REPRODUCED AT GOVT EXPENSE

Mars at a Glance

General

❑ One of five planets known to ancients; Mars was Roman god of war, agriculture and the state
❑ Reddish color; at times the 3rd brightest object in night sky after the Moon and Venus

Physical Characteristics

❑ Average diameter 4,217 miles (6,780 kilometers); about half the size of Earth, but twice the size of Earth's Moon
❑ Mass 1/10th of Earth's; gravity only 38 percent as strong as Earth's
❑ Density 3.9 times greater than water (compared to Earth's 5.5 times greater than water)
❑ No magnetic field detected

Orbit

❑ Fourth planet from the Sun, the next beyond Earth
❑ About 1.5 times farther from the Sun than Earth is
❑ Orbit elliptical; distance from Sun varies from a minimum of 128.4 million miles (206.7 million kilometers) to a maximum of 154.8 million miles (249.2 million kilometers); average distance from Sun, 141.5 million miles (227.7 million kilometers)
❑ Revolves around Sun once every 687 Earth days
❑ Rotation period (length of day in Earth days) 24 hours, 37 min, 23 sec (1.026 Earth days)
❑ Poles tilted 25 degrees, creating seasons similar to Earth's

Environment

❑ Atmosphere composed chiefly of carbon dioxide (95.3%), nitrogen (2.7%) and argon (1.6%)
❑ Surface atmospheric pressure less than 1/100th that of Earth's average
❑ Surface temperature averages -64 F (-53 C); varies from -199 F (-128 C) during polar night to 80 F (27 C) at equator during midday at closest point in orbit to Sun

Features

❑ Highest point is Olympus Mons, a huge shield volcano more than 52,000 feet (15,900 meters) high and 370 miles (600 kilometers) across; has about the same area as Arizona
❑ Canyon system of Valles Marineris is largest and deepest known in solar system; extends more than 2,500 miles (4,000 kilometers) and has 3 to 6 miles (5 to 10 kilometers) relief from floors to tops of surrounding plateaus
❑ "Canals" observed by Giovanni Schiaparelli and Percival Lowell about 100 years ago were a visual illusion in which dark areas appeared connected by lines. The Viking missions of the 1970s, however, established that Mars has channels probably cut by ancient rivers

Moons

❑ Two irregularly shaped moons, each only a few kilometers wide
❑ Larger moon named Phobos ("fear"); smaller is Deimos ("terror"), named for attributes personified in Greek mythology as sons of the god of war

REPRODUCED AT GOVT EXPENSE

Historical Mars Missions

Mission, Country, Launch Date, Purpose, Results

Mars 1, USSR, 11/1/62, Mars flyby, lost at 65.9 million miles
Mariner 3, U.S., 11/5/64, Mars flyby, shroud failed
Mariner 4, U.S. 11/28/64, first successful Mars flyby 7/14/65, returned 21 photos
Zond 2, USSR, 11/30/64, Mars flyby, failed to return planetary data
Mariner 6, U.S., 2/24/69, Mars flyby 7/31/69, returned 75 photos
Mariner 7, U.S., 3/27/69, Mars flyby 8/5/69, returned 126 photos
Mariner 8, U.S., 5/8/71, Mars flyby, failed during launch
Mars 2, USSR, 5/19/71, Mars orbiter/lander arrived 11/27/71, no useful data returned
Mars 3, USSR, 5/28/71, Mars orbiter/lander, arrived 12/3/71, some data and few photos
Mariner 9, U.S., 5/30/71, Mars orbiter, in orbit 11/13/71 to 10/27/72, returned 7,329 photos
Mars 4, USSR, 7/21/73, failed Mars orbiter, flew past Mars 2/10/74
Mars 5, USSR, 7/25/73, Mars orbiter, arrived 2/12/74, lasted a few days
Mars 6, USSR, 8/5/73, Mars orbiter/lander, arrived 3/12/74, little data return
Mars 7, USSR, 8/9/73, Mars orbiter/lander, arrived 3/9/74, little data return
Viking 1, U.S., 8/20/75, Mars orbiter/lander, orbit 6/19/76-1980, lander 7/20/76-1982
Viking 2, U.S., 9/9/75, Mars orbiter/lander, orbit 8/7/76-1987, lander 9/3/76-1980;
combined, the Viking orbiters and landers returned 50,000+ photos
Phobos 1, USSR, 7/7/88, Mars/Phobos orbiter/lander, lost 8/89 en route to Mars
Phobos 2, USSR, 7/12/88, Mars/Phobos orbiter/lander, lost 3/89 near Phobos
Mars Observer, U.S., 9/25/92, lost just before Mars arrival 8/21/93

REPRODUCED AT GOVT. EXPENSE

Why Mars?

Of all the planets in the solar system, Mars is the most like Earth and the planet most likely to support eventual human expeditions. Earth's Moon and Mercury are dry, airless bodies. Venus has suffered a runaway greenhouse effect, developing a very dense carbon dioxide atmosphere that has resulted in the escape of all its water and the rise of torrid, inhospitable surface temperatures of nearly 900 degrees Fahrenheit (500 degrees Celsius). Mars, on the other hand, has all of the ingredients necessary for life, including an atmosphere, polar caps and large amounts of water locked beneath its surface. Mars, in fact, is the only other terrestrial planet thought to have abundant subsurface water that could be mined and converted into its liquid form to support human life.

Compared to Earth, Mars is about 4,200 miles (6,800 kilometers) in diameter, about half the diameter and about one-eighth the volume of Earth. Mars turns on its axis once every 24 hours, 37 minutes, making a Martian day — called a "sol" — only slightly longer than an Earth day.

Early Mars may have been like early Earth. Current theories suggest that, early in its history, Mars was once much warmer, wetter and enveloped in a much thicker atmosphere. The planet's poles are tilted to the plane of its orbit at an angle of 25 degrees — about the same amount as Earth, whose poles are titled at 23.3 degrees to the ecliptic plane. Because of its tilted axis, Mars has Earth-like seasonal changes and a wide variety of weather phenomena. Although its atmosphere is tenuous, winds and clouds as high as 15 miles (25 kilometers) above the surface can blow across stark Martian deserts. Low-level fogs and surface frost have been observed by spacecraft. Spacecraft and ground-based observations have revealed huge dust storms that often start in the southern regions and sometimes spread across the entire planet.

Mars is the most plausible beginning point to try to answer the questions: Are we alone in the universe? Is life a cosmic accident or does it develop anywhere given the proper environmental conditions?

On Earth, evidence for life can be found in some of the oldest rocks, dating from the end of Earth's bombardment by comets and meteors around 4 billion years ago. Surfaces on Mars that are the same age show remains of ancient lakes, which suggests that liquid water flowed on the surface at one time and the climate was both wetter and substantially warmer. If this proves to be true, then further exploration may reveal whether life did develop on Mars at some point early in its history. If it did not, scientists will want to know why it didn't. Or perhaps they will be able to determine whether life that began early on in Mars' evolution could still survive in some specialized niches such as hydrothermal systems near volcanoes.

Exploring Mars will also provide us with a better understanding of significant events that humankind may face in the future as Earth continues to evolve. What are the factors involved in natural changes in a planet's climate, for instance? On Earth, one of the most important questions now being studied is whether or not human activities are contributing to

REPRODUCED AT GOVT. EXPENSE

global warming. Could these climate changes bring about negative environmental changes such as sea level rise due to the melting of the ice caps? Mars provides a natural laboratory for studying climate changes on a variety of time scales. If Mars in the past was warmer and wetter, and had a thicker atmosphere, why did it change?

Layered deposits near the Martian polar caps suggest climatic fluctuations on a shorter time scale. If scientists can learn about the important factors controlling climatic changes on another planet, they may be able to understand the consequences of human-induced changes on Earth.

Mars is an excellent laboratory to engage in such a study. Earth and Venus are active environments, constantly erasing all traces of their evolution with dynamic geological processes. On Mercury and on Earth's Moon, only relatively undisturbed ancient rocks are present. Mars, by contrast, has experienced an intermediate level of geological activity, which has produced rocks on the surface that preserve the entire history of the solar system. Sedimentary rocks preserved on the surface contain a record of the environmental conditions in which they formed and, consequently, any climate changes that have occurred through time.

The Search for Life

After years of exhaustive study of the data returned by the Viking spacecraft from their biology experiments, most scientists concluded that it is unlikely that any life currently exists on the surface on Mars. Centuries of fascination about the possibility of intelligent life on the red planet seemed to fade.

Since that time 20 years ago, though, much has been learned about the origins of life on Earth. Paleobiologists learned that the smallest single-celled microscopic organisms had sprung from hot volcanic vents at the very bottom of Earth's oceans. They learned that the most fundamental carbonaceous organic material demonstrated cell division and differentiated cell types, very similar to other fossils and living species.

Geologists learned that these organisms could exist in regions along the floors of oceans in environments akin to pressure-cookers, at extremely hot temperatures devoid of light and prone to extreme pressures that no human being could survive. With new technologies and highly sophisticated instruments, they began to measure the skeletons of bacteria-like organisms lodged deep within old rocks.

Then, in August 1996, a NASA-funded team of scientists announced its findings of the first organic molecules thought to be from Mars. The findings reignited the age-old question: Are we alone in the universe?

The two-year investigation by a team led by scientists from NASA's Johnson Space Center, Houston, TX, revealed evidence that strongly suggested primitive life may have existed on Mars more than 3.6 billion years ago. Researchers discovered an igneous meteorite in Earth's Antarctica bearing trapped gases that suggested it had been blasted away from the sur-

REPRODUCED AT GOVT EXPENSE

face of Mars in some impact event; the rock was dated to about 4.5 billion years old, the period when Mars and its terrestrial neighbors were forming. According to scientists on the team, the rock contains fossil evidence of what they believe may have been ancient microorganisms.

The team studied carbonate minerals deposited in the fractures of the 4-pound (2-kilogram), potato-shaped Martian meteorite. They concluded that although some of the carbonate minerals were probably the result of carbon dioxide from Mars' atmosphere dissolved in water, living organisms also may have assisted in the formation of the carbonate — and some remains of the microscopic organisms may have become fossilized, in a fashion similar to the formation of fossils in limestone on Earth. Then, 16 million years ago, a huge comet or asteroid struck Mars, ejecting a piece of the rock from its subsurface location with enough force to escape the planet. For millions of years, the chunk of rock floated through space. It encountered Earth's atmosphere 13,000 years ago and fell in Antarctica as a meteorite.

In the tiny globs of carbonate, researchers found a number of features that can be interpreted as possible past life. Team members from Stanford University detected organic molecules called polycyclic aromatic hydrocarbons (PAHs) concentrated in the vicinity of the carbonate. Researchers from Johnson Space Center found mineral compounds commonly associated with microscopic organisms and the possible microscopic fossil structures.

Most of the team's findings were made possible only because of very recent technological advances in high-resolution scanning electron microscopy and laser mass spectrometry. Just a few years ago, many of the features that they reported were undetectable. Although past studies of the meteorite in question — designated ALH84001 — and others of Martian origin failed to detect evidence of past life, they were generally performed using lower levels of magnification, without the benefit of the technology used in this research. In addition, the recent discovery of extremely small bacteria on Earth, called nanobacteria, prompted the team to perform this work at a much finer scale than had been done in the past.

The findings, presented in the August 16, 1996, issue of the journal Science, have been put forth to the scientific community at large for further study. The team was co-led by Johnson Space Center planetary scientists Dr. David McKay, Dr. Everett Gibson and Kathie Thomas-Keprta of Lockheed Martin, with the major collaboration of a Stanford University team headed by chemistry professor Dr. Richard Zare, as well as six other NASA and university partners.

Whether or not the evidence stands up to scientific scrutiny, the suggestion alone has renewed interest in exploring the planets, stars and galaxies outside of the Milky Way galaxy. The questions resound: Does life exist elsewhere in the universe? And why does it exist at all? Did life as we know it originate on Earth or did it spring from other planets, only to be transported to Earth, where it found the most advantageous niche for continuing evolution?

In the year 2003 or 2005, NASA plans to send to Mars a sample return mission, a robotic spacecraft that will be able to return soil and rock samples to Earth for direct study much as the Apollo astronauts returned hundreds of pounds of lunar rocks to Earth. With renewed interest in the recent Mars meteorite findings, the mission may realize a higher priority and come to

REPRODUCED AT GOVT EXPENSE

fruition sooner than 2005. Additional debate and scientific experimentation with Martian meteorites in the next several years may bring about an answer that may become a turning point in the history of civilization.

REPRODUCED AT GOVT. EXPENSE

The Multi-Year Mars Program

Launch of the 1996 Mars Global Surveyor kicks off a 10-year-long U.S. program of Mars exploration. The program is designed to send pairs of inexpensive spacecraft to Mars every 26 months through 2005.

Although they are to be launched within a month of each other in late 1996, Mars Global Surveyor and Mars Pathfinder have their roots in two separate NASA programs. Mars Pathfinder was approved as a standalone project under NASA's Discovery program, which was created in 1992 to fund low-cost solar system missions. Mars Global Surveyor, on the other hand, is the first in a multi-year series of missions under the Mars Surveyor program. After 1996, current plans call for Mars Surveyor to send two spacecraft to Mars during each launch window in 1998, 2001 and 2003, and a single spacecraft in 2005.

By that time, NASA will have a fleet of small spacecraft with highly focused science goals probing and watching the planet, setting in place a new way of exploring the solar system. Based on the space agency's philosophy of bringing faster, better and cheaper missions to fruition, combinations of orbiters and landers will take advantage of novel microtechnologies — lasers, microprocessors and electronic circuits, computers and cameras the size of a gaming die — to deliver an ingenious armada of miniaturized payloads to Earth's planetary neighbor.

U.S. Mars missions planned at this point are:

1996:

- **Mars Pathfinder** (Discovery mission). Demonstrate low cost-entry and landing system, and rover mobility; initiates mineralogy studies; continue study of surface characteristics and Martian weather. Cost: $171 million (capped at $150 million in fiscal year 1992 dollars), plus $25 million for rover.

- **Mars Global Surveyor.** Global reconnaissance of physical and mineralogical surface characteristics, including evidence of water; determine global topography and geologic structure of Mars; assess atmosphere and magnetic field during seasonal cycles; provide communication relay for Russian Mars '96 landers and U.S. Mars Surveyor '98 lander and microprobes. Cost: $155 million.

1998:

- **Mars Surveyor '98 Orbiter.** Characterization of the Martian atmosphere, including definition of atmospheric water content during seasonal cycles.

- **Mars Surveyor '98 Lander.** Access past and present-day water reservoirs on Mars; surface chemistry, topology and mineralogy; continue weather studies. The spacecraft will also

REPRODUCED AT GOVT. EXPENSE

deliver two innovative soil microprobes developed under NASA's New Millennium program. Combined cost of both 1998 missions: $187 million, plus $26 million for the microprobes.

2001:

- **Mars Surveyor '01 Orbiter.** Characterize mineralogy and chemistry of surface, including identification of surface water reservoirs.

- **Mars Surveyor '01 Lander.** To be determined. NASA is exploring the possibility of delivering a Russian rover or small station launched by a Russian launch vehicle; the alternative would be a U.S. rover for studies of chemistry and mineralogy. Combined cost of both 2001 missions: approximately $200 million.

2003:

- **To be determined**. NASA is exploring the possibility of a rover that would be used for sample collection and caching for later pickup by a sample return mission. Cost: approximately $200 million.

2005:

- **To be determined.** NASA is exploring the possibility of a Mars sample return mission if found to be affordable. Funds available from the Mars Surveyor program: approximately $200 million.

International Cooperation

International collaboration on all Mars missions will be an important aspect of exploration in the next decade. Many space agencies around the world are considering participation in the planning stages of future missions, including those of Russia, Japan and many European countries. Scientists from the United States are consulting with international partners on the best ways to combine their efforts in Mars exploration. This may result in new proposals for cooperative missions in the first decade of the 21st century.

Among the ongoing programs taking shape is one called "Mars Together," a concept for the joint exploration of Mars by Russia and the United States. The program was initiated in the spring of 1994 and bore its first fruit in the summer of 1995. A Russian co-principal investigator and Russian hardware were incorporated into one experiment, the Pressure Modulator Infrared Radiometer, to be flown on NASA's Mars Surveyor 1998 orbiter. Vassili Moroz of the Russian Academy of Sciences Space Research Institute (IKI) in Moscow will co-lead the experiment with Dr. Daniel McCleese of NASA's Jet Propulsion Laboratory. The Russian institute will also provide the optical bench for the radiometer. In addition, IKI will furnish a complete

REPRODUCED AT GOVT. EXPENSE

science instrument, the LIDAR (Laser Detection and Ranging) Atmospheric Sounder, for the 1998 Mars Surveyor lander. Dr. Sergei Pershin of IKI is the Principal Investigator.

Meanwhile, more extensive collaboration is under consideration for a 2001 mission. A joint U.S.-Russian Mars Together team has been formed to study a combined U.S.-Russian spacecraft launched by a Russian Molniya rocket. The exact configuration is still under study, but Russia expects to include a descent module containing a rover, called Marsokhod, in its portion of the payload.

NASA and the Russian Space Agency have agreed to start planning toward a potential sample return mission in the middle of the first decade of the 21st century. A joint science team has been charted to study this possibility.

Japan is also building an orbiter, called Planet B, to study the Martian upper atmosphere and its interaction with the solar wind. The spacecraft, to be launched in August 1998, will carry a U.S. neutral mass spectrometer instrument to investigate the upper atmosphere, in addition to a variety of Japanese instruments.

REPRODUCED AT GOVT EXPENSE

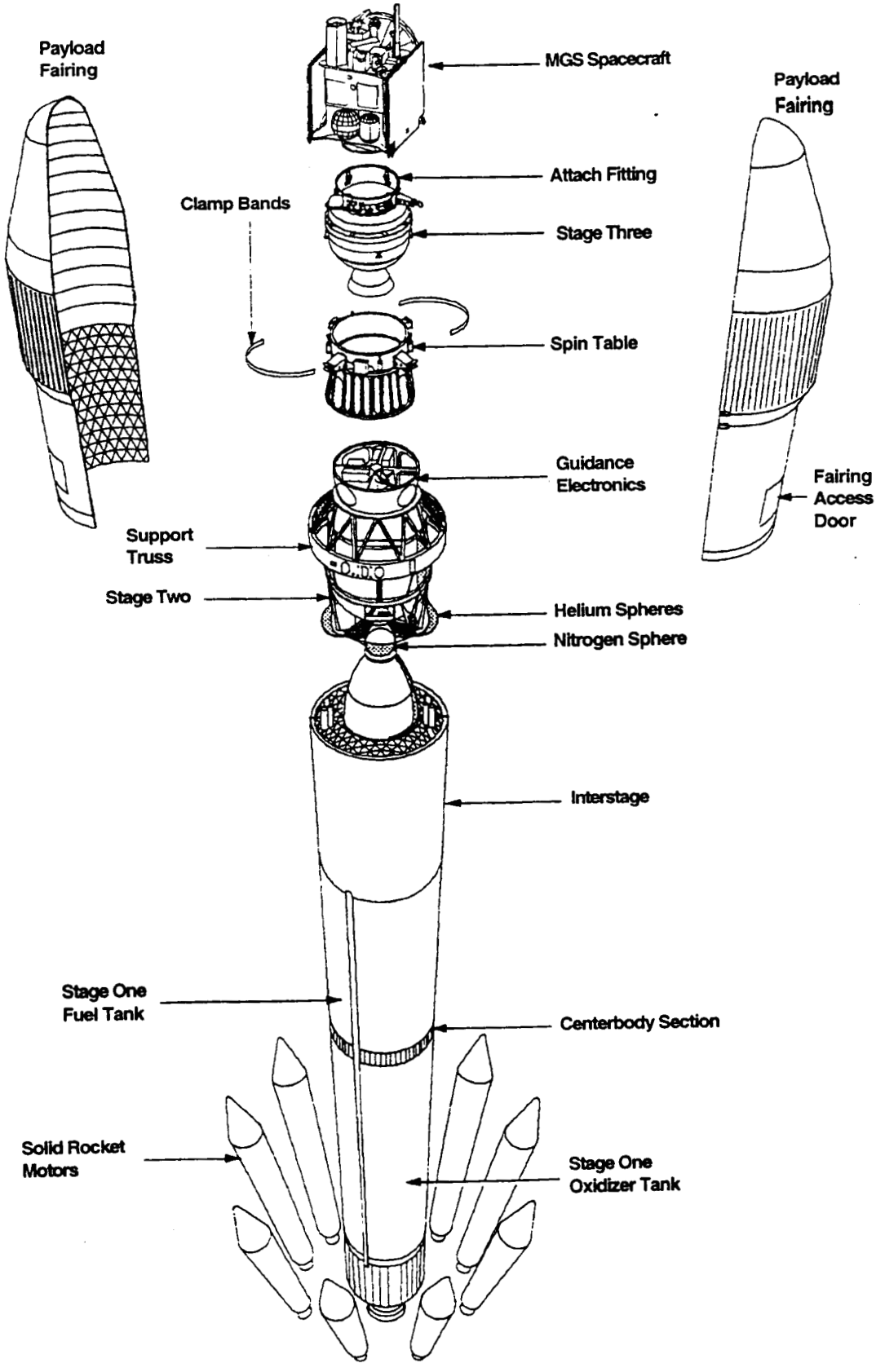

Mars Global Surveyor's Delta II launch vehicle

REPRODUCED AT GOVT EXPENSE

Mars Global Surveyor

The study of Mars' early history, geology and climate will be the centerpiece of the Mars Global Surveyor mission. The spacecraft, which will orbit Mars in a near-polar orbit that will take it over most of the planet, carries a suite of sophisticated remote-sensing instruments designed to create a global portrait of Mars by mapping its topography, magnetism, mineral composition and atmosphere. The instruments are flight spares from experiments flown on Mars Observer, which was lost shortly before Mars arrival in 1993. With this comprehensive archive of the red planet, scientists will be able to address a multitude of questions surrounding the evolution of Mars and all the inner planets of the solar system.

Mission Overview

Launch. A Delta II 7925A launch vehicle will lift the 2,337-pound (1,060-kilogram) Mars Global Surveyor spacecraft into orbit during a launch window extending from November 6-25, 1996 from launch pad 17A at Cape Canaveral, FL. There are two near-instantaneous launch opportunities each day through November 15; the two launch opportunities on November 6 are at 12:11 p.m. Eastern Standard Time and 1:15 p.m. EST. The launch must occur at exactly that time or the opportunity closes. Beginning on November 16, only one launch opportunity is available each day. On November 16, the opportunity occurs at 1:36 p.m. EST.

After liftoff, the first stage of the three-stage Delta rocket and the nine solid-fuel strap-on boosters will lift the spacecraft to an altitude of about 70 miles (115 kilometers) above Earth. From that point, the Delta's second stage will take over and boost the payload to a circular parking orbit 115 miles (185 kilometers) above Earth, at about launch plus 10 minutes. After parking orbit insertion, the booster and spacecraft will coast for between 24 and 37 minutes, depending on the actual launch date, until reaching a position over the eastern Indian Ocean. At that time, the second stage will restart and fire for nearly two minutes to raise the apogee, or high point, of the parking orbit.

Small rockets will be used to spin up the Delta's third stage and spacecraft to 60 rpm; after separation from the second stage, the third-stage engine will be ignited. The third stage, a Star 48B solid rocket, will fire for 87 seconds to complete the trans-Mars injection burn sending the spacecraft on its flight path to the red planet. Once the burn is completed, but before the third stage is jettisoned, a yo-yo cable device will deploy from the Star 48B to de-spin the spacecraft. The de-spin will take place several minutes after burnout of the launch vehicle's third stage.

Next, the spacecraft will separate from the third stage and its solar arrays will be swept forward 30 degrees; Mars Global Surveyor will slow to a spin rate of one revolution every 100 minutes. The first signal from the spacecraft will be received about 25 minutes after trans-Mars injection by the 112-foot-diameter (34-meter) antenna of NASA's Deep Space Network in Canberra, Australia.

REPRODUCED AT GOVT EXPENSE

Trans-Mars cruise. The spacecraft will take between 301 and 309 days to reach the red planet on a flight path known as a Type 2 trajectory, depending on the Earth departure date within the 20-day launch period. A Type 2 trajectory takes a spacecraft more than 180 degrees around the Sun and, compared with other trajectories, is a slower way to reach Mars. However, because the spacecraft is traveling at a slower velocity, it will require less propellant to slow down once it is ready to be captured in orbit around the destination planet. A launch at the opening of the launch period on November 6, 1996, would result in a Mars arrival date of September 11, 1997, while a launch at the close of the period on November 25, 1996, would result in arrival on September 22, 1997.

Seven days after launch, the spacecraft's propellant tanks will be pressurized. Eight days later (launch plus 15 days), Mars Global Surveyor will fire its main engine in the first of four trajectory correction maneuvers to fine-tune its flight path.

On the first part of its flight, known as inner cruise, all spacecraft communications with Earth will occur through its broad-beam low-gain antenna. The dish-shaped, narrow-beam high-gain antenna sits on the spacecraft in a stowed, body-fixed orientation during cruise, making communications with Earth through the high-gain antenna impossible during the first part of interplanetary cruise unless the spacecraft is turned to point the high-gain antenna directly at Earth.

Outer cruise will begin when the spacecraft switches from the low-gain to the high-gain antenna for communications with Earth. The exact time when the switch will become feasible depends on the angle between the Sun and Earth as seen from the spacecraft. When this angle falls to a level low enough, the solar panels will be able to collect adequate power while the spacecraft is pointing the high-gain antenna directly at Earth. This angle starts at about 120 degrees at the time of launch and falls to less than 60 degrees by January 6, 1997, assuming a launch on November 6, 1996, and switch-over thus would take place on January 6, 1997.

Three more trajectory correction maneuvers are planned during cruise. Following the first such thruster firing 15 days after launch, a second will be executed 120 days later; a third will be executed 30 days after the second; and a fourth will be executed 20 days before Mars orbit insertion. Assuming a launch on November 6, 1996 launch date, these maneuvers would take place March 21, April 20 and August 22, 1997, respectively.

Most of the outer cruise will consist of minimal activity as the spacecraft completes its journey to Mars. The vast majority of the events will involve acquiring navigation and tracking data to support the remaining trajectory correction maneuvers. During the last 30 days of approach to Mars, the focus will be on final targeting of the spacecraft to the proper aim point, and preparations for orbit insertion.

Some science observations during approach to Mars are also planned, including four approach pictures of Mars. The spacecraft's camera will take global pictures of Mars on 120

REPRODUCED AT GOVT. EXPENSE

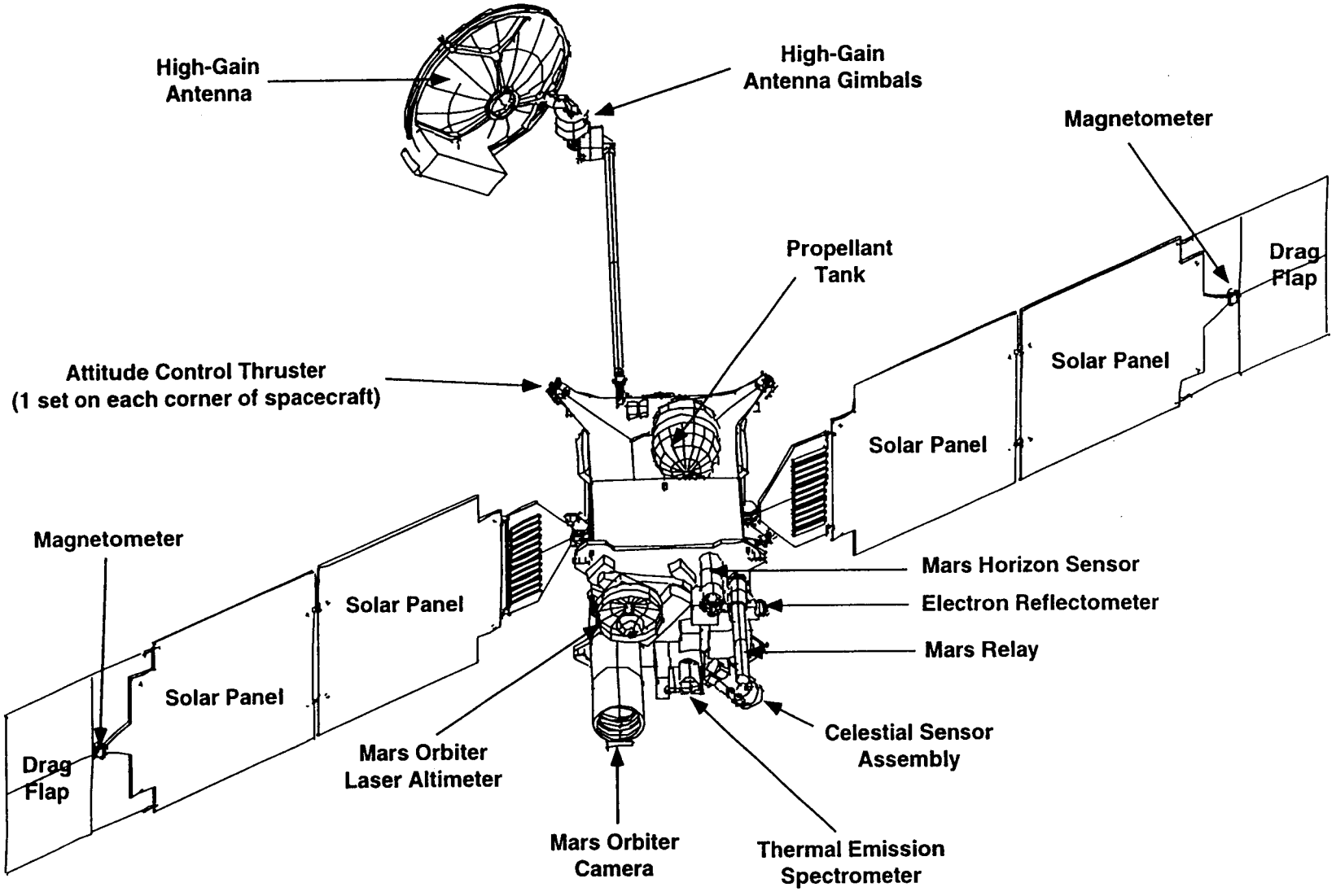

Mars Global Surveyor spacecraft

REPRODUCED AT GOVT. EXPENSE

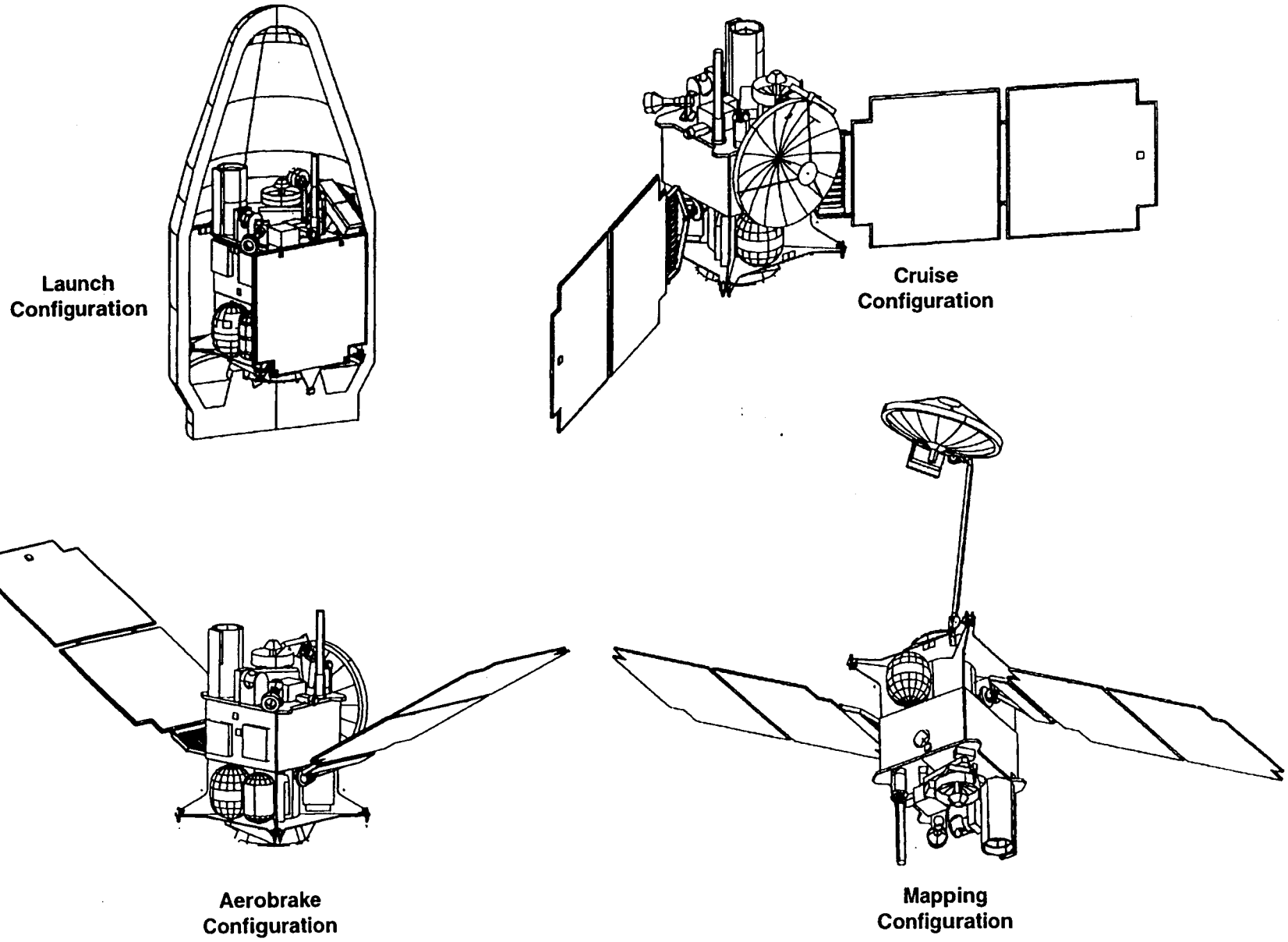

Mars Global Surveyor configurations

REPRODUCED AT GOVT EXPENSE

days before Mars arrival; then at 90 days before arrival; at 60 days before arrival; and finally, at 30 days before Mars arrival.

Mars orbit insertion. Mars Global Surveyor will perform an attitude correction maneuver once it reaches the orbit of Mars to turn the spacecraft's main engine toward the direction of its motion, or toward Mars. Then the spacecraft will fire its main engine, a 600-newton engine, for approximately 20 to 25 minutes to slow down. By completion of the orbit insertion burn, the spacecraft will have slowed down by about 2,230 miles per hour (1,000 meters per second) with respect to Mars.

Aerobraking. Because of mass limits imposed by the lifting capabilities of the Delta II booster, the Mars Global Surveyor spacecraft will not carry enough propellant to be able to put itself into its final low-altitude mapping orbit with an engine firing. As a result, the spacecraft will rely on aerobraking, an innovative mission-enabling braking technique, first demonstrated by the Magellan spacecraft at Venus, to trim its initial highly elliptical capture orbit down to the altitudes for the mapping orbit.

During each of its orbits shortly after Mars arrival, the spacecraft will pass through the upper fringes of the Martian atmosphere each time it reaches periapsis, the point in its orbit closest to the planet. Friction from the atmosphere will cause the spacecraft to be dragged closer to the surface and lose some of its momentum during each orbit. Loss of momentum will also lower the spacecraft's apoapsis, or the point in its orbit farthest from Mars.

Aerobraking will take place over four months, beginning with an initial "walk-in" phase. The spacecraft's apoapsis and periapsis will be gradually adjusted over the months as scientists and engineers learn more about the density of Mars' upper atmosphere, which is poorly understood today. As the spacecraft continues to drop into a lower orbit, the navigation team will be able to gauge the atmospheric density and its variations from one orbit to another. In addition, the spacecraft is scheduled to fire its thrusters four times during the aerobraking phase. The final mapping orbit will be nearly circular, at 217 by 254 miles (350 by 410 kilometers), or an average of 234 miles (378 kilometers) above the planet's surface.

After the mapping orbit is achieved and frozen in place, spacecraft systems will be deployed and instruments will be checked-out over a 10-day period.

Prime mission. Once in its mapping orbit, Mars Global Surveyor will complete one orbit around Mars about every two hours. Each new orbit will bring the spacecraft over a different part of Mars. As the weeks pass, the spacecraft will create a global portrait of Mars — capturing the planet's ancient cratered plains, huge canyon system, massive volcanoes, channels and frozen polar caps. During its mission, Mars Global Surveyor will pass over the terrain where the two U.S. Viking landers — separated by more than 4,000 miles (6,400 kilometers) — have rested for 21 years.

The primary mapping mission will begin on March 15, 1998, and last until January 31, 2000 — a period of one Martian year or 687 Earth days (almost two Earth years). The space-

REPRODUCED AT GOVT. EXPENSE

craft will transmit its recorded data back to Earth once a day during a single 10-hour tracking pass by antennas of the Deep Space Network. During mapping operations, the spacecraft will return more than 600 billion bits of scientific data to Earth — more than that returned by all previous missions to Mars and, in fact, roughly equal to the total amount of data returned by all planetary missions since the beginning of planetary exploration with the exception of the Magellan mission to Venus.

As Mars rotates beneath the spacecraft, a suite of onboard instruments will record a variety of detailed information. Detectors will measure radiation — visible and infrared — from the surface to deduce the presence of minerals that make up Mars. These same instruments will record infrared radiation from the thin Martian atmosphere, gathering data about its changing pressure, composition, water content and dust clouds. By firing short pulses of laser light at the surface and measuring the time the reflections take to return, a laser altimeter will map out the heights of Mars' mountains and the depths of its valleys.

The camera system will use wide- and narrow-angle lenses to record landforms and atmospheric cloud patterns. Another sensor will look for a Martian magnetic field. As the telecommunications subsystem transmits information back to Earth, engineers will use the signal of the orbiting spacecraft to derive data about the planet's atmosphere and gravitational field.

By the time global mapping operations are over, Mars Global Surveyor will have obtained an extensive record of the nature and behavior of the Martian surface, atmosphere and interior. Such a record will aid in planning more specialized explorations that might involve robots, scientific stations deployed to the Martian surface, sample return missions and perhaps even human landings. Just as importantly, this record will help scientists understand planet Earth and what the future might have in store for humanity.

Mission operations. Throughout the two years of Mars Global Surveyor's mapping mission, principal investigators, team leaders and interdisciplinary scientists will have science operations planning computers at their home institutions. All will be electronically connected to the project database at the Jet Propulsion Laboratory in Pasadena, CA, giving them direct involvement in mission operations.

Their computers will be equipped with software that allows the science teams to remotely initiate most of the commands required by their instruments to conduct desired experiments. The teams will be able to access raw science data within hours of their receipt on Earth. This automated operation will provide "quick-look" science data and let investigators easily monitor the health and performance of their instruments. Many images and other data will be immediately available to the public on the Internet.

After a period of data validation, science data, both raw and processed, along with supplementary processing information and documentation, will be transferred to NASA's Planetary Data System archive for access and use by the broader planetary science community and the general public.

REPRODUCED AT GOVT. EXPENSE

Aerobraking From Capture Orbit to Mapping Orbit Altitude Takes About 130 Earth Days

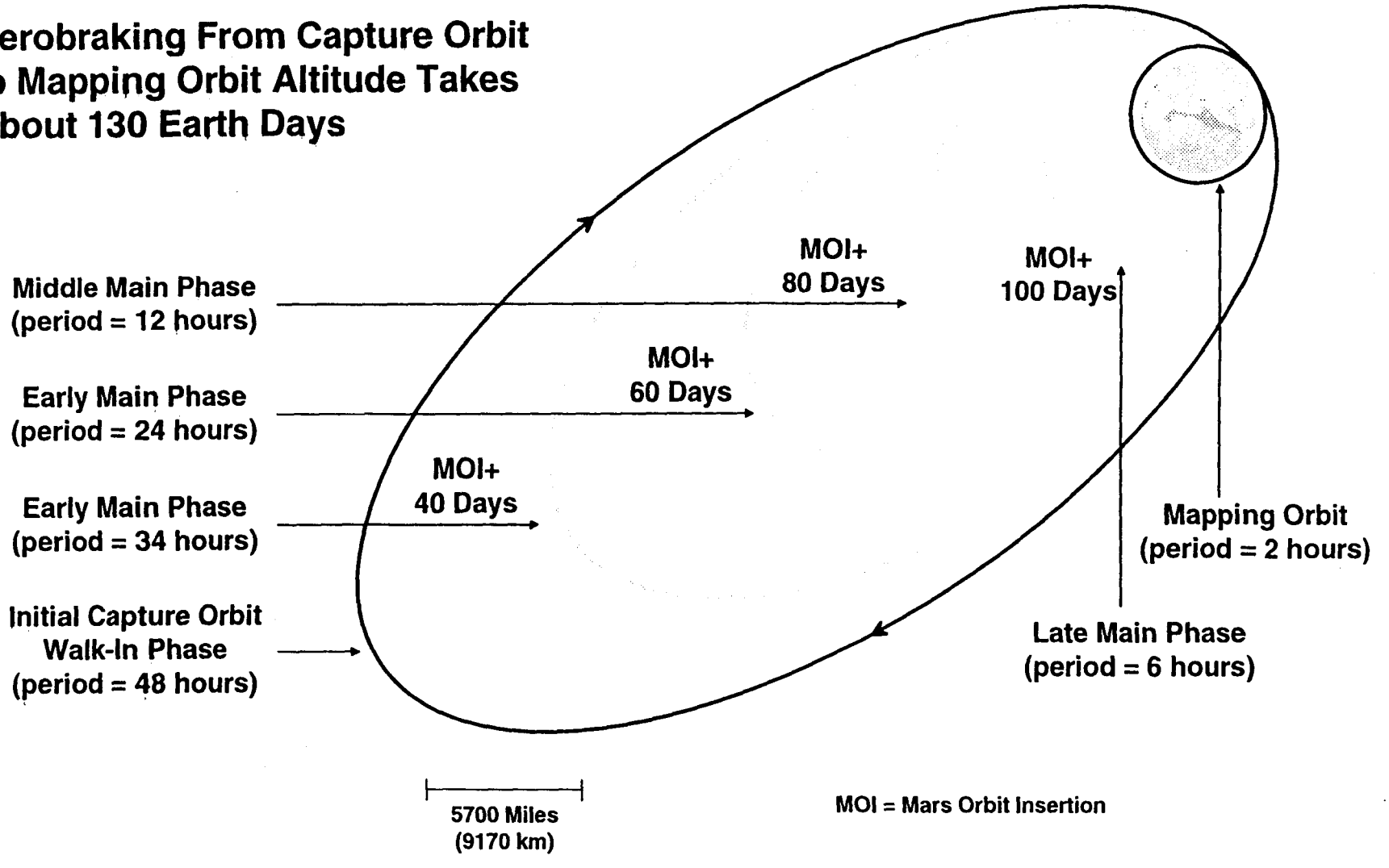

Mars Global Surveyor aerobraking orbits

REPRODUCED AT GOVT. EXPENSE

Control and operation of Mars Global Surveyor will be performed by a team of engineers located at JPL and at the Lockheed Martin Astronautics Inc. in Denver, CO. Engineers in Denver will be electronically linked to JPL, providing monitoring and analysis of Mars Global Surveyor based on telemetry received from the spacecraft through NASA's Deep Space Network. The team will also develop the sequence of commands that will be sent to the spacecraft via the Deep Space Network. The electronic networking eliminates the costs of relocating mission operations team members during the mission.

Spacecraft

The core of the Mars Global Surveyor spacecraft is a rectangular body, or bus, that houses computers, the radio system, solid-state data recorders, fuel tanks and other equipment. Attached to the outside of the bus are several rocket thrusters, which will be fired to adjust the spacecraft's path during the cruise to Mars and to modify the spacecraft's orbit around the planet. At launch, the spacecraft weighs 2,337 pounds (1,060 kilograms), including the science payload and fuel. Mars Global Surveyor stands about 3 meters (10 feet) tall. The bus or main body of the spacecraft measures 5 by 5 feet (1.5 by 1.5 meters) and is 40 feet (12 meters) across from tip to tip when the solar panels are fully unfolded. The high-gain antenna, to be deployed later in the cruise phase, will measure 10 feet (3 meters) in height. The high-gain antenna will be deployed on a 6-1/2-foot-long (2-meter) boom.

To minimize costs, most of the spacecraft's electronics and science instruments are spare units left over from the Mars Observer mission. The spacecraft design also incorporates new hardware — the radio transmitters, solid state recorders, propulsion system and composite material bus structure.

Mars Global Surveyor will orbit the planet so that one side of the bus, called the nadir deck, always faces the Martian surface. Of the six science instruments, four — the Mars Orbiter Camera, the Mars Orbiter Laser Altimeter, the Electron Reflectometer and the Thermal Emission Spectrometer — are attached to the nadir deck, along with the Mars relay radio system. The magnetometer sensors are mounted on the ends of the solar arrays.

The bus has two solar-array wings and a boom-mounted high-gain communications antenna. The solar arrays, which will always point toward the Sun, provide 980 watts of electricity for operating the spacecraft's electronic equipment and for charging nickel hydrogen batteries. The batteries will provide electricity when the spacecraft is mapping the dark side of Mars.

The dish-shaped high-gain antenna is mounted on the end of a boom so that its view of Earth will not be blocked by the solar arrays as the spacecraft orbits Mars. Measuring 5 feet (1.5 meters) in diameter, this steerable antenna will be pointed toward Earth even though the spacecraft's position will be continuously adjusted during mapping to keep the nadir deck pointed toward Mars.

REPRODUCED AT GOVT. EXPENSE

The spacecraft's radio system, including the high-gain antenna, also will function as a science instrument. Researchers will use it in conjunction with NASA's Deep Space Network ground stations for the radio science investigations.

To maintain appropriate operating temperatures, most of the outer exposed parts of the spacecraft, including the science instruments, are wrapped in thermal blankets.

Science Objectives

Mars Global Surveyor is designed to provide a detailed, global map of Mars that will allow scientists to study its geology, climate and interior. Key science objectives are to:

- ❑ Characterize the surface features and geological processes on Mars.
- ❑ Determine the composition, distribution and physical properties of surface minerals, rocks and ice.
- ❑ Determine the global topography, planet shape and gravitational field.
- ❑ Establish the nature of the magnetic field and map the crustal remnant field. (A crustal remnant field is evidence of magnetism that is detected within the planet's crust or rocks, produced by the planet's own magnetic field at the time of formation.)
- ❑ Monitor global weather and the thermal structure of the atmosphere.
- ❑ Study interactions between Mars' surface and the atmosphere by monitoring surface features, polar caps that expand and recede, the polar energy balance, and dust and clouds as they migrate over a seasonal cycle.

Among the multitude of scientific questions scientists wish to answer are those relating to Mars' early atmosphere and the dramatic climate changes which sent the planet into a deep freeze. All the ingredients necessary for life exist on Mars, including water, yet the surface of Mars is totally dry and probably devoid of life today.

Water is fundamental to the understanding of geological processes and climate change. But water cannot exist in liquid form at the low atmospheric pressures that currently prevail on the surface of Mars; it turns into water vapor or ice. Spacecraft have photographed numerous large and fine channels across the surface of Mars, with shapes and structures that indicate, almost beyond a doubt, that they were carved by running water. Where has the water gone? Only a tiny fraction is known to exist in the northern polar cap and in the atmosphere. Some of it may have escaped into space, but scientists believe that most of it should have remained on Mars. They want to know if water could be hidden in permafrost — thick layers of ice-rock — beneath the surface, just as it is trapped in the polar regions on Earth.

REPRODUCED AT GOVT EXPENSE

The origin and evolution of Mars are still a mystery. Thought to have formed 4.6 billion years ago, in much the same way as the other rocky planets of the inner solar system, Mars has two distinct hemispheres, roughly divided by the equator. The southern hemisphere is badly battered, perhaps the result of an intense bombardment by debris as the planet was forming. This part of Mars may be closest in history and age to the heavily cratered faces of the Moon and Mercury. Other regions of Mars may be widespread plains of volcanic lava, which erupted from within the planet over a long period of time. Similar eruptions spread across Earth's Moon to form the dark areas known as lunar maria, or "seas."

During the last 2 billion or 3 billion years, Mars also developed features that resemble those of Earth rather than the Moon. Geologic activity in the younger, northern hemisphere created huge, isolated volcanoes — most notably Olympus Mons and the other volcanoes along the Tharsis uplift — as the interior of Mars melted and lava rose to the surface. A huge canyon just below the Martian equator, called Vallis Marineris, would dwarf Earth's Grand Canyon, stretching 3,100 miles (5,000 kilometers) across the planet's surface. Many sinuous channels, apparently cut by running water that may have flooded regions of Mars hundreds of millions of years ago, also appear in the northern hemisphere.

Science Experiments

Mars Global Surveyor will carry a complement of six scientific instruments which have been furnished by NASA centers as well as universities and industry. They are:

- **Thermal Emission Spectrometer.** This instrument will analyze infrared radiation from the surface. From these measurements, scientists can determine several important properties of the rocks and soils that make up the Martian surface: how hot and cold they get during the cycles of night and day; how well they transmit heat; the distribution of rock and grain sizes; and the amount of the surface covered by large rocks and boulders. Scientists will also be able to identify minerals in solid rocks and sand dunes, which will be key to understanding how Martian bedrock has weathered over millions of years and how it might be weathering today. The instrument can also provide information about the Martian atmosphere, especially the locations and nature of short-lived clouds and dust. Principal Investigator is Dr. Philip Christensen, Arizona State University.

- **Mars Orbiter Laser Altimeter.** This experiment will measure the height of Martian surface features. A laser will fire pulses of infrared light 10 times each second, striking a 525-foot (160-meter) area on the surface. By measuring the length of time it takes for the light to return to the spacecraft, scientists can determine the distance to the planet's surface. Data from this instrument will give scientists elevation maps precise to within 100 feet (30 meters) from which they will be able to construct a detailed topographic map of the Martian landscape. Principal Investigator is Dr. David Smith, NASA Goddard Space Flight Center.

- **Magnetometer/Electron Reflectometer.** The magnetometer/electron reflectometer will search for evidence of a planetary magnetic field and measure its strength, if it exists.

REPRODUCED AT GOVT. EXPENSE

These measurements will provide critical tests for current speculation about the early history and evolution of the planet. The instrument will also scan the surface to detect remnants of an ancient magnetic field, providing clues to the Martian past when the magnetic field may have been stronger due to the planet's higher internal temperature. Principal Investigator is Dr. Mario Acuna, NASA Goddard Space Flight Center.

- **Radio Science.** The radio science investigation will use data provided by the spacecraft's telecommunications system, high-gain antenna and an onboard ultra-stable oscillator, which is like an ultra precise clock, to map variations in the gravity field by noting where the spacecraft speeds up and slows down in its passage around Mars. From these observations, a precise map of the gravity field can be constructed and related to the structure of the planet. In addition, scientists will study how radio waves are distorted as they pass through Mars' atmosphere in order to measure the atmosphere's temperature and pressure. Principal Investigator for the radio science team is Dr. G. Leonard Tyler, Stanford University.

- **Mars Orbiter Camera.** Unlike cameras on spacecraft such as Galileo or Voyager, which take conventional, snapshot-type exposures, the Mars orbiter camera uses a "push-broom" technique that builds up a long, ribbon-like image as the spacecraft passes over the planet. The camera will provide low-resolution global coverage of the planet every day, collecting images through red and blue filters. It will also obtain medium- and high-resolution images of selected areas. The wide-angle lens is ideal for accumulating a weather map of Mars each day, showing surface features and clouds at a resolution of about 4.6 miles (7.5 kilometers). These global views will be similar to the types of views obtained by weather satellites orbiting the Earth. The narrow-angle lens will image small areas of the surface at a resolution of 6.5 to 9.5 feet (2 to 3 meters). These pictures will be sharp enough to show small geologic features such as boulders and sand dunes — perhaps even the now-silent Viking landers — and may also be used to select landing sites for future missions. Principal Investigator is Dr. Michael Malin, Malin Space Science Systems Inc., San Diego, CA.

- **Mars Relay System.** Mars Global Surveyor carries a radio receiver/transmitter supplied by the French space agency, Centre National d'Etudes Spatiales, which will support the Russian Mars '96 mission. The relay system will periodically receive and relay data from instrument packages deployed to the Martian surface by the Russian Mars '96 orbiter, which will be working in parallel to receive and relay additional data from the instrument packages. Data relayed from the surface to Mars Global Surveyor will be stored in the large solid-state memory of the orbiter's camera, where it will be processed for return to Earth. This collaborative effort will maximize data collection. Following support of the Mars '96 mission, the Mars relay system is expected to provide multiple years of in-orbit communications relay capability for future international Mars missions. Principal Investigator is Dr. Josette Runavot, Centre National d'Etudes Spatiales, France.

REPRODUCED AT GOVT. EXPENSE

Mars Pathfinder

Mars Pathfinder will send a lander and small robotic rover, Sojourner, to the surface of Mars. The primary objective of the mission is to demonstrate a low-cost way of delivering a science package to the surface of the red planet using a direct entry, descent and landing with the aid of small rocket engines, a parachute, airbags and other techniques. Landers and free-ranging rovers of the future will share the heritage of Mars Pathfinder designs and technologies first tested in this mission. In addition, Pathfinder will study ancient rocks to understand the nature of the early environment on Mars and the processes that have led to features that exist today.

Mission Overview

Launch. Mars Pathfinder will be launched atop a Delta II 7925 expendable launch vehicle from launch complex 17B at Cape Canaveral, Florida, during the launch period of December 2-31, 1996. The launch window on December 2 opens at 2:09 a.m. EST and becomes progressively earlier by several minutes each day thereafter.

The first-stage engine of the Delta II and six of its nine solid boosters will be ignited at liftoff. The remaining three boosters will be fired when the first six burn out approximately 67 seconds after launch. Those three boosters will be ejected when the spacecraft is about 33 miles (54 kilometers) above Earth's surface. Main engine cutoff will occur next at an altitude of about 73 miles (118 kilometers).

Second-stage ignition will take place about 2.5 minutes later, with ejection of the fairing, or nosecone-like shell covering the payload, following eight seconds later. When the spacecraft reaches an altitude of about 117 miles (189 kilometers) above Earth, its second-stage engine will be turned off for the first time, approximately 9 minutes, 20 seconds after launch. Second-stage engine cutoff marks the end of the booster phase.

The craft will coast for nearly an hour to reach the proper orbital position from which to embark on its trajectory toward Mars. During this long coasting phase, two major spacecraft events will occur. Spinning at a rate of approximately 1 degree per second, the vehicle will first reposition itself so that its axis of rotation is perpendicular to the Sun. This attitude adjustment – called a "barbecue roll maneuver" -- will protect the spacecraft from uneven solar heating.

A maneuver will be performed next to place the second stage into the correct orientation before it is fired a second time to provide enough energy for the injection burn. At the end of this burn, the spacecraft will be in a highly elliptical orbit of about 117 by 1,840 miles (173 by 2,974 kilometers) around Earth. Then the PAM-D upper stage will be spun up to about 70 rpm using a set of spin rockets. The spacecraft and PAM-D will separate from the second stage shortly thereafter.

REPRODUCED AT GOVT. EXPENSE

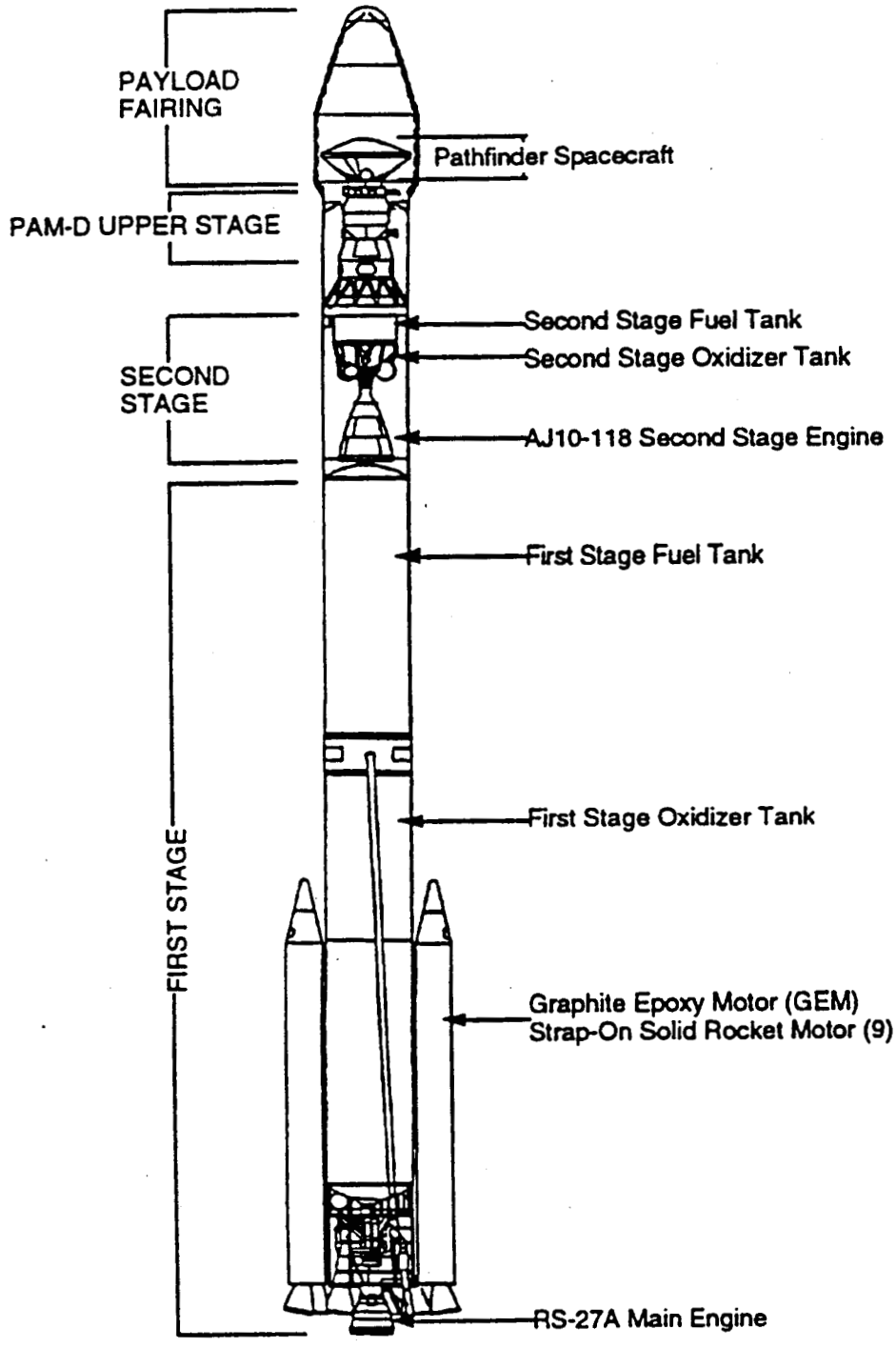

Mars Pathfinder's launch vehicle

REPRODUCED AT GOVT. EXPENSE

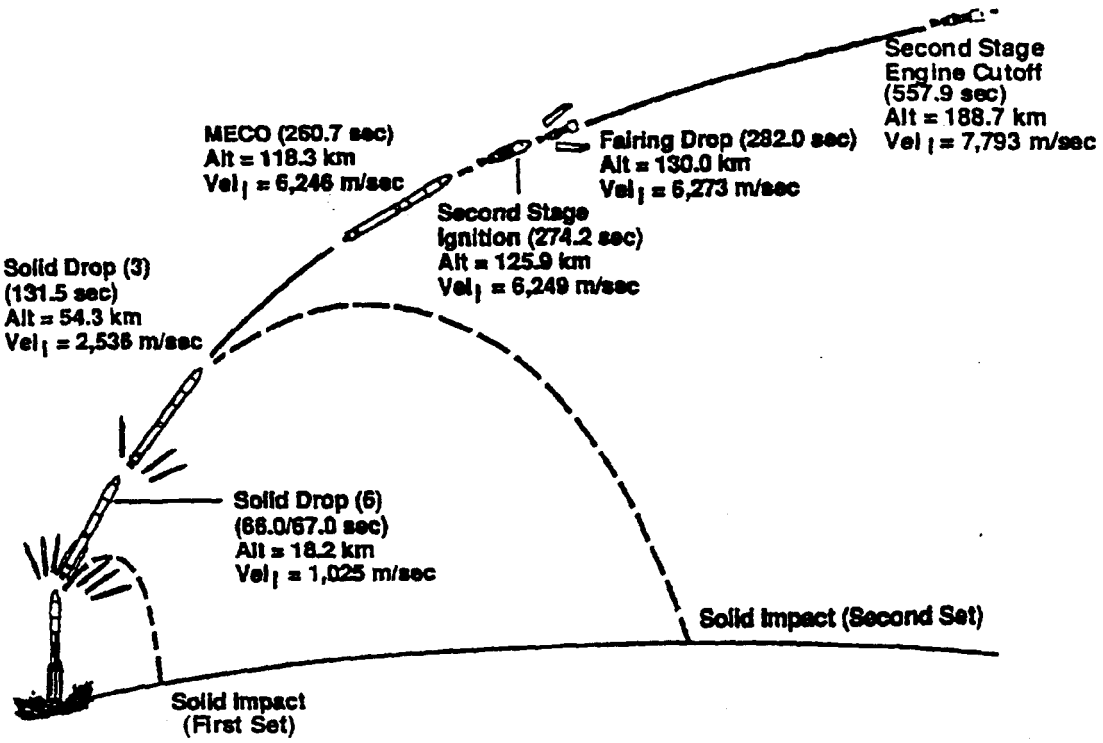

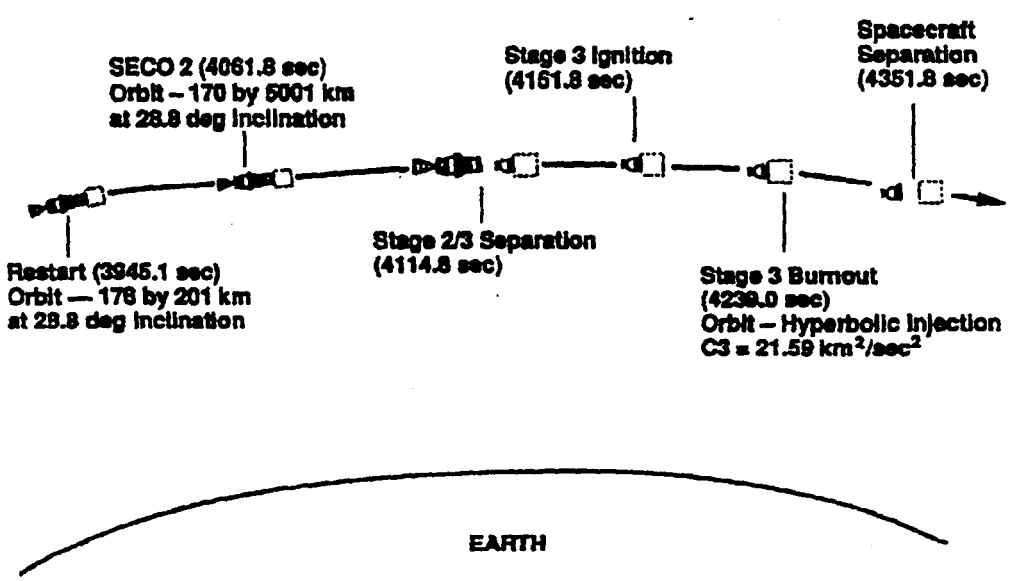

Mars Pathfinder launch phases

REPRODUCED AT GOVT. EXPENSE

About 70 minutes after launch, the PAM-D will fire its engine again to prepare for third-stage separation. While Mars Pathfinder is still attached to the PAM-D, a yo-yo cable device will be deployed to slow down the spacecraft's spin rate from 70 rpm to 12 rpm, plus or minus 2 rpm. Once the correct spin-down rate has been achieved, about two to five minutes later, the spacecraft will separate from the PAM-D booster. NASA's Deep Space Network 112-foot (34-meter) antenna at Goldstone, CA, will acquire Pathfinder's X-band signal.

Near-Earth activities. The near-Earth phase of cruise begins when Mars Pathfinder separates from the PAM-D upper stage, and ends one day after execution of the first of four trajectory correction maneuvers.

The spacecraft will pass through Earth's shadow immediately after separation. The length of this shadow varies from 22 to 25 minutes depending on the actual launch date. The spacecraft's sun sensor will lock onto the Sun once the spacecraft exits the shadow. The sensor will calculate the angle of the Sun with respect to the spacecraft and provide that information to the flight computer.

The spacecraft enters a fairly quiet state after Sun acquisition and performance of health and status assessments. A two-way communications link will be established to allow navigation tracking and uplink capabilities. In addition, a brief health check of the instruments and the stowed rover will be performed during this period.

About 30 hours after launch, the spacecraft will begin to spin down. During this time, Pathfinder will be asked to determine its orientation in space by locating specific stars and then adjusting its position to be in a direct line of sight. Spin-down will be performed in a series of steps, with the spacecraft assuming various intermediate rates before achieving the desired 1.9 rpm cruise rate. Real-time commands will be used to accomplish these incremental de-spin maneuvers.

After the spacecraft's orientation in space is determined, the flight team will begin a two-week period checking out and calibrating subsystems including the solar array, battery, thermal control functions, attitude and control functions, and radio frequency subsystem. During the remainder of the near-Earth phase, the spacecraft's chief activities include collecting and transmitting engineering data, carrying out initial spacecraft health checks and calibrations, and thruster firings to maintain the correct Earth-Sun geometry.

The first trajectory correction maneuver, the largest of the four thruster firings, will occur 30 days after launch. The Deep Space Network will provide continuous coverage of all trajectory maneuvers.

Earth-Mars cruise. The Earth-Mars transfer phase begins one day after completion of the first trajectory correction maneuver and ends 45 days before Mars arrival. After the trajectory maneuver, Deep Space Network coverage will be reduced to three 4- to 8-hour passes per week, with the spacecraft transmitting data at 40 bits per second. Coverage by ground stations will be increased just before the second and third trajectory correction maneuvers.

REPRODUCED AT GOVT. EXPENSE

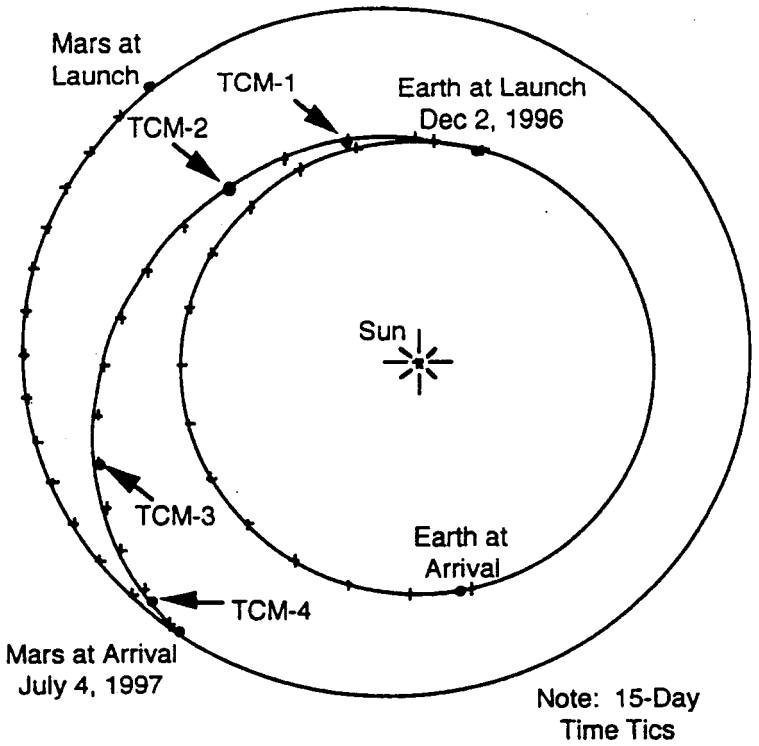

Mars Pathfinder's Earth-Mars trajectory

The second trajectory maneuver will take place 60 days after launch to correct further launch vehicle injection errors. This maneuver may be moved depending on the actual launch date to avoid Deep Space Network coverage conflicts with Mars Global Surveyor. The third trajectory correction maneuver will be performed 60 days before Mars arrival, or about five months (150 days) after launch.

Communications during trajectory maneuvers is provided through the spacecraft's medium-gain antenna. Deep Space Network tracking will be required for eight hours daily for three days prior to and after each maneuver. Tracking is required continuously for the 24-hour period centered around each maneuver.

No science operations will take place during this time. Ground operations will include analysis of spacecraft subsystems, maintenance, periodic calibrations of key spacecraft functions, and planning of trajectory correction maneuvers. Additional ground activities will include flight team operational readiness tests to prepare for entry, landing and descent, and surface operations.

Mars approach. The Mars approach phase begins 45 days before entry and ends 12 hours prior to entry. This phase is focused on a continuation of cruise activities and preparation for entry, landing and descent. The spacecraft will continue in a 2 rpm spin-stabilized mode with the spin axis oriented toward Earth. Continuous coverage by the Deep Space Network is

REPRODUCED AT GOVT. EXPENSE

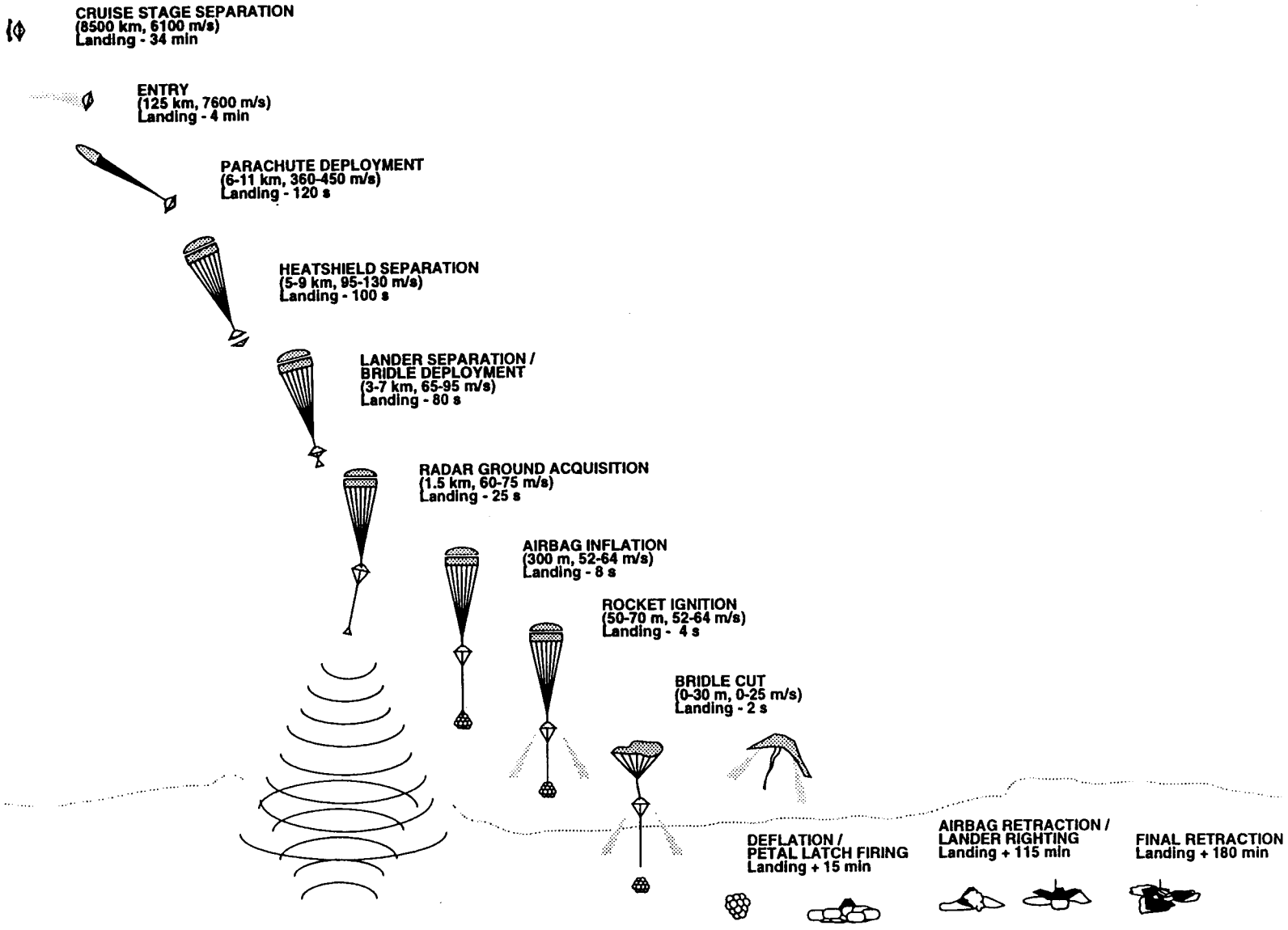

Mars Pathfinder entry, descent and landing

REPRODUCED AT GOVT. EXPENSE

required during this phase to support planning and execution of the fourth and final trajectory correction maneuver, and for final entry preparations.

A final health and status check of the instruments and rover will be performed at 15 days before Mars entry. The fourth trajectory maneuver will be performed 10 days before Mars entry to ensure that landing occurs within the defined 180- by 60-mile (300- by 100-kilometer) ellipse on the Martian surface.

At six days before Mars entry, the spacecraft will turn about 7 degrees to orient itself for entry. At five days before Mars entry, a command will be issued to the spacecraft to enter a computer mode called the entry, descent, landing control mode. In this mode, the spacecraft will autonomously control many activities as it enters Mars' atmosphere, descends and lands.

After the spacecraft enters this mode, the spacecraft will power on the accelerometer and the atmospheric structure instrument, and will charge the lander's battery.

Entry, descent and landing. The entry, descent and landing phase begins 12 hours prior to Mars arrival and ends when the lander petals are fully deployed. Key activities during this phase include cruise stage separation, entry, parachute deployment, radar altimeter operations, airbag inflation, rocket-assisted deceleration burns, impact, airbag retraction and petal deployment. Real-time communications with the flight system will be possible through impact and, possibly until the lander petals are deployed, depending on the landing orientation.

The entry trajectory for Mars Pathfinder is a ballistic, direct entry with an initial velocity of 17,000 miles per hour (7.6 kilometers per second) and a mean flight path angle of 14.2 degrees. The entry velocity is approximately 80 percent faster than that of the Viking landers in the 1970s; the Vikings descended from Martian orbit, whereas Pathfinder will enter the atmosphere directly from its interplanetary trajectory.

The peak aerodynamic deceleration during entry is about 20 G's and occurs 70 seconds after entry. A parachute will be deployed between 135 and 190 seconds after entry, at an altitude of between about 4 and 6 miles (6 to 10 kilometers). Once the parachute is deployed, the flight path angle begins to bend over until the vehicle is descending nearly vertically. Landing will occur between 225 and 330 seconds after entry. This dispersion is caused by altitude uncertainties at the landing site and navigation targeting errors.

Descent begins with deployment of Mars Pathfinder's parachute and will end when the spacecraft rolls to a stop on the surface of Mars. The parachute will be deployed by firing a mortar to push the chute out of its canister. The heat shield will be released by a timer signal 20 seconds after parachute deployment to provide sufficient time for the chute to inflate and stabilize. The lander will be released from the backshell on a 65-foot (20-meter) bridle 20 seconds after heat shield release. This separation distance will increase stability during the solid rocket firing.

REPRODUCED AT GOVT. EXPENSE

The radar altimeter will begin acquiring data at an altitude of about 5 feet (1.5 kilometers) above the surface. The spacecraft's airbags will inflate two seconds prior to ignition of the rocket-assisted deceleration rockets, and the rockets will fire 1 to 6 seconds before impact. The total burn time of the rockets is approximately 2.2 seconds, but the bridle is cut prior to the end of the burn to allow enough extra thrust to carry the backshell and parachute away from the lander. This will prevent the backshell and parachute from falling onto the spacecraft. The lander will then free-fall the remaining distance to the ground.

The lander could hit the ground in almost any orientation as a result of the rocket burn and bridle cut. At impact, the lander will bounce, roll and tumble until all impact energy dissipates. The interval between initial impact and the spacecraft's complete halt could be as long as several minutes. The airbags completely enclose the lander, so subsequent bounces should not result in high deceleration. Each face of the spacecraft's tetrahedron has a single six-lobed airbag, and energy is dissipated through vents in between the lobes.

Post-landing. After the lander comes to a complete stop, the next key activities are deflation and retraction of the airbags, and opening of the spacecraft's petals. Airbag deflation may begin to occur almost immediately after landing due to leaks in the bags. Each of the airbags has deflation patches which will be opened to speed up the process. These rip patches are opened by Kevlar cords inside the bags which are connected to a retraction motor. Additional cords are attached to other points inside each bag so that the airbags can be retracted after landing.

Flight software will control how the airbags are retracted. In general, the three airbags on the sides facing away from the ground will be retracted first. Once those bags have been retracted, the petals will be partially deployed so that the lander stands itself right side up. The final airbag on the side originally facing the ground will then be retracted before the petals are fully deployed. If the lander comes to rest on a rock, the entire lander may be tilted, but further maneuvering of the petals can be performed during surface operations to lower the overall tilt of the lander.

Telecommunications during entry should provide significant information about the behavior of the entry, descent and landing subsystem. Key data to be transmitted to Earth include accelerometer measurements and selected atmospheric structure instrument measurements. The Deep Space Network's 230-foot (70-meter) antenna in Madrid, Spain, will be used to support entry communications.

Prime mission. Mars Pathfinder's primary mission will begin when its lander petals have been fully unfolded and the lander switches to a sequence of computer commands that will control its functions. The spacecraft will land about four hours before sunrise on Mars and will spend the time in darkness retracting its airbags, standing itself upright and opening the petals so that solar panels can be powered up with the first light of sunrise.

The lander's first task will be to transmit engineering and science data collected during its descent through the thin atmosphere of Mars. If no errors are detected in these data, a real-time

REPRODUCED AT GOVT. EXPENSE

command will be sent from Earth instructing the lander to unlock the imager camera head, deploy and point the high-gain antenna on its pop-up mast, roll out two rover exit ramps and unlatch the 22-pound (10-kilogram) rover.

Next, the lander's camera will take a panoramic image of the Martian landscape and begin transmitting the data directly to Earth at a few thousand bits per second. The first images of the Martian landscape, which will be returned to Earth within 35 minutes of the start of the primary mission, will show engineers whether the petal on which the rover sits is flat against the surface or tilted against a rock. The image will also show the terrain beyond both rover exit ramps so that engineers may decide which route looks safer.

Once a decision on the route has been made, commands will be sent to deploy the rover. Sojourner will spend about an hour exiting its ramp.

Driving off onto the floor of an old outflow channel, Sojourner will explore the surface at the command of Earth-based operators, who will rely on lander-based images to select a path and target for the rover. The six-wheeled Sojourner travels at 0.4 inch (1 centimeter) per second, performing mobility tests, imaging its surroundings and deploying an alpha proton x-ray spectrometer designed to study the elemental composition of rocks. Altogether, the rover will range a few tens of yards (or meters) from the lander.

Also mounted on the lander are wind sensors, wind socks and high- and low-gain antennas. Instruments will be used to measure pressure, temperature and density of the Martian atmosphere. Magnets mounted on the lander will collect magnetic specimens of Martian dust and soil as small as 100 microns.

Much of the lander's mission after this will be focused on supporting the rover with imaging, telecommunications and data storage.

Extended missions. The primary mission lasts seven Martian days, or "sols," for the rover, and 30 Martian days, or "sols," for the lander. The rover could carry out an extended mission beyond that period, depending on how long its power sources and electronics last; engineers expect that the most probable reason for it to stop functioning is hot-cold cycling of its onboard electronics. For the lander an extended mission lasting up to one year after landing is possible.

Lander activities in the extended mission would include continued use of the lander camera to obtain images of the terrain and atmosphere, collection of key engineering telemetry and continued collection of meteorology data.

Sojourner's extended mission activities would include repeating soil mechanics experiments on various soils; additional spectrometer measurements of both rocks and soil; obtaining images of selected areas with the rover camera, including close-ups of any damage to the lander; obtaining images of the lander's landing and tumbling path; and traveling longer distances, with the possibility of going over the horizon.

REPRODUCED AT GOVT. EXPENSE

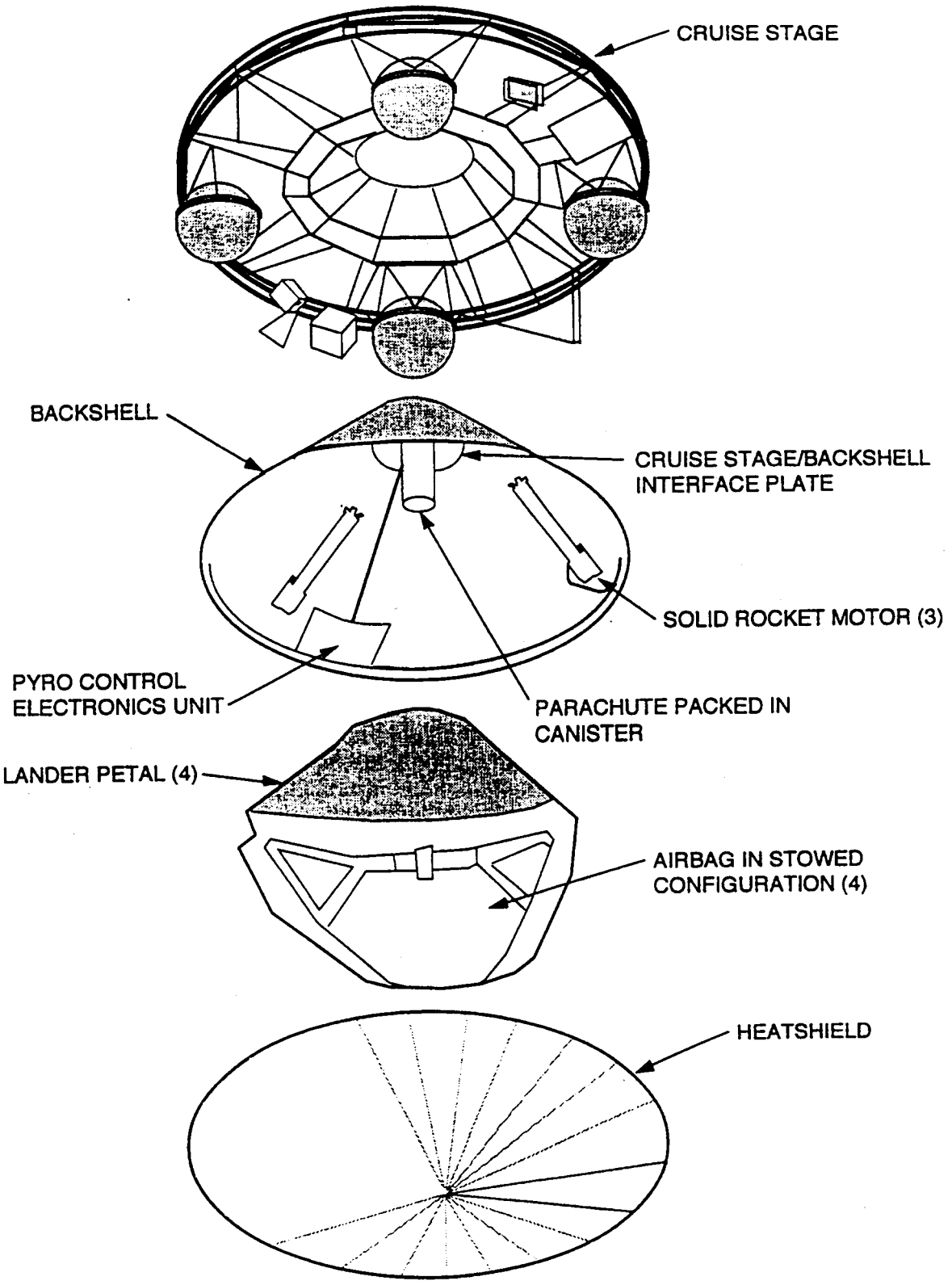

Mars Pathfinder flight system

REPRODUCED AT GOVT. EXPENSE

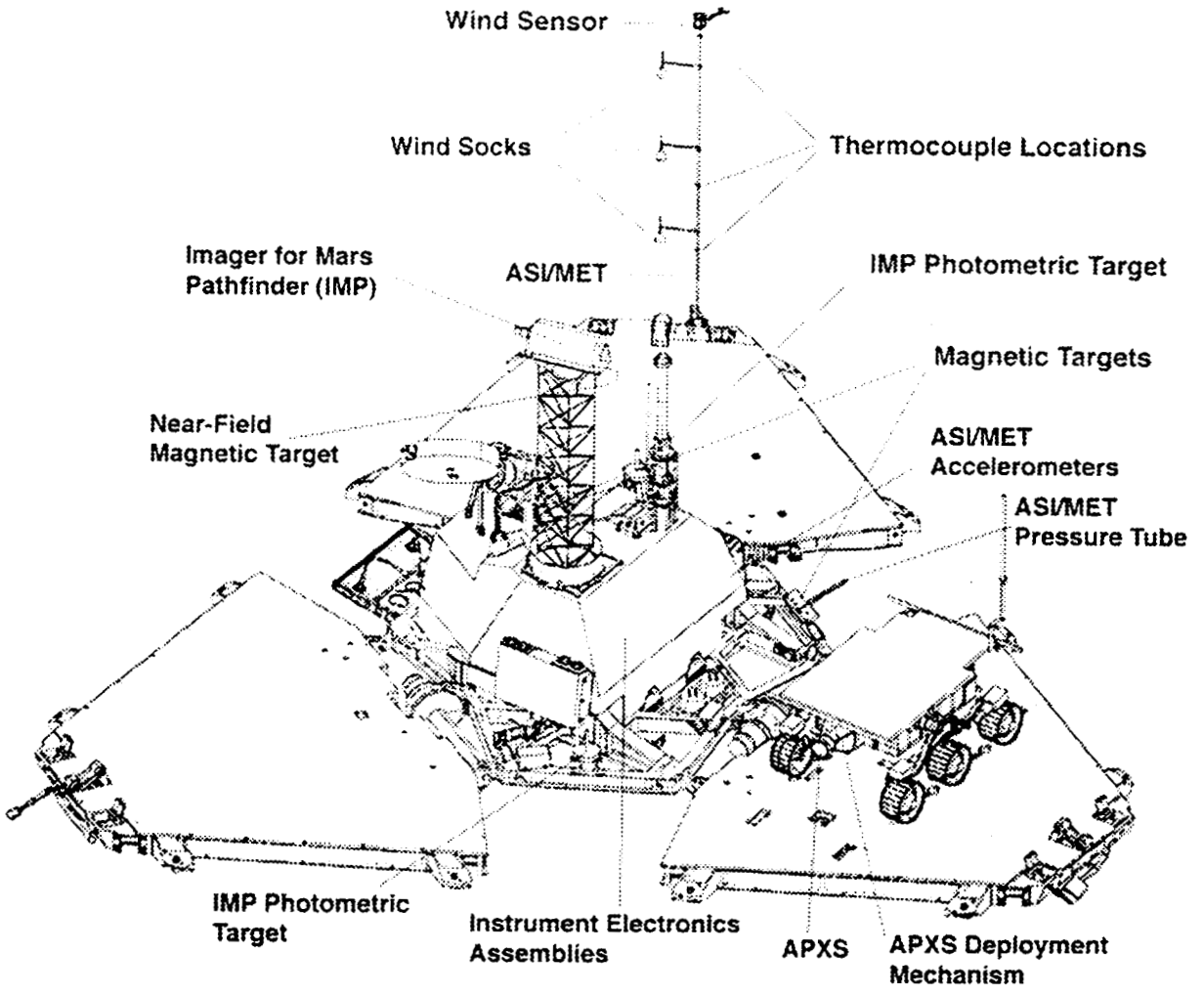

Mars Pathfinder lander

Mission operations. All operations for Mars Pathfinder will be conducted at JPL, where the science teams reside. Science data, both raw and processed, will be transferred after a period of validation to NASA's Planetary Data System archive for access and use by the planetary community at large and the general public.

Spacecraft

At launch the Mars Pathfinder spacecraft will weigh about 1,962 pounds (890 kilograms), including its cruise stage, aeroshell and backshell, solar panels, propulsion stage, medium- and- high-gain antennas and 220 pounds (100 kilograms) of cruise propellant. The cruise stage measures 8.5 feet (2.65 meters) in diameter and stands 5 feet (1.5 meters) tall. The lander resembles a tetrahedron, a small pyramid standing about 3 feet (0.9 meter) tall with three triangular-shaped sides and a base.

REPRODUCED AT GOVT. EXPENSE

When Pathfinder is poised to enter the Martian atmosphere, its main components will be the aeroshell, folded lander and rover, parachute, airbag system and small rocket engines. Combined, the spacecraft will weigh approximately 1,256 pounds (570 kilograms) at entry.

Once it has landed and its airbags have been deflated, Pathfinder will then weigh about 793 pounds (360 kilograms). Subsystems contributing to its landed weight include the opening/uprighting mechanism, lander cabling and electronics, instruments and rover. When it is unfolded and lying flat on the surface, the spacecraft will measure 9 feet (2.75 meters) across and sport a mast-mounted camera poking up about 5 feet (1.5 meters) from the ground.

The lander is controlled by a commercially available control computer, the IBM RAD 6000, which is a radiation-hardened, single-board computer related to the PowerPC. The computer has a 32-bit architecture which executes more than 22 million instructions per second. The computer will store flight software as well as engineering and science data, including images and rover information, in 128 megabytes of available memory.

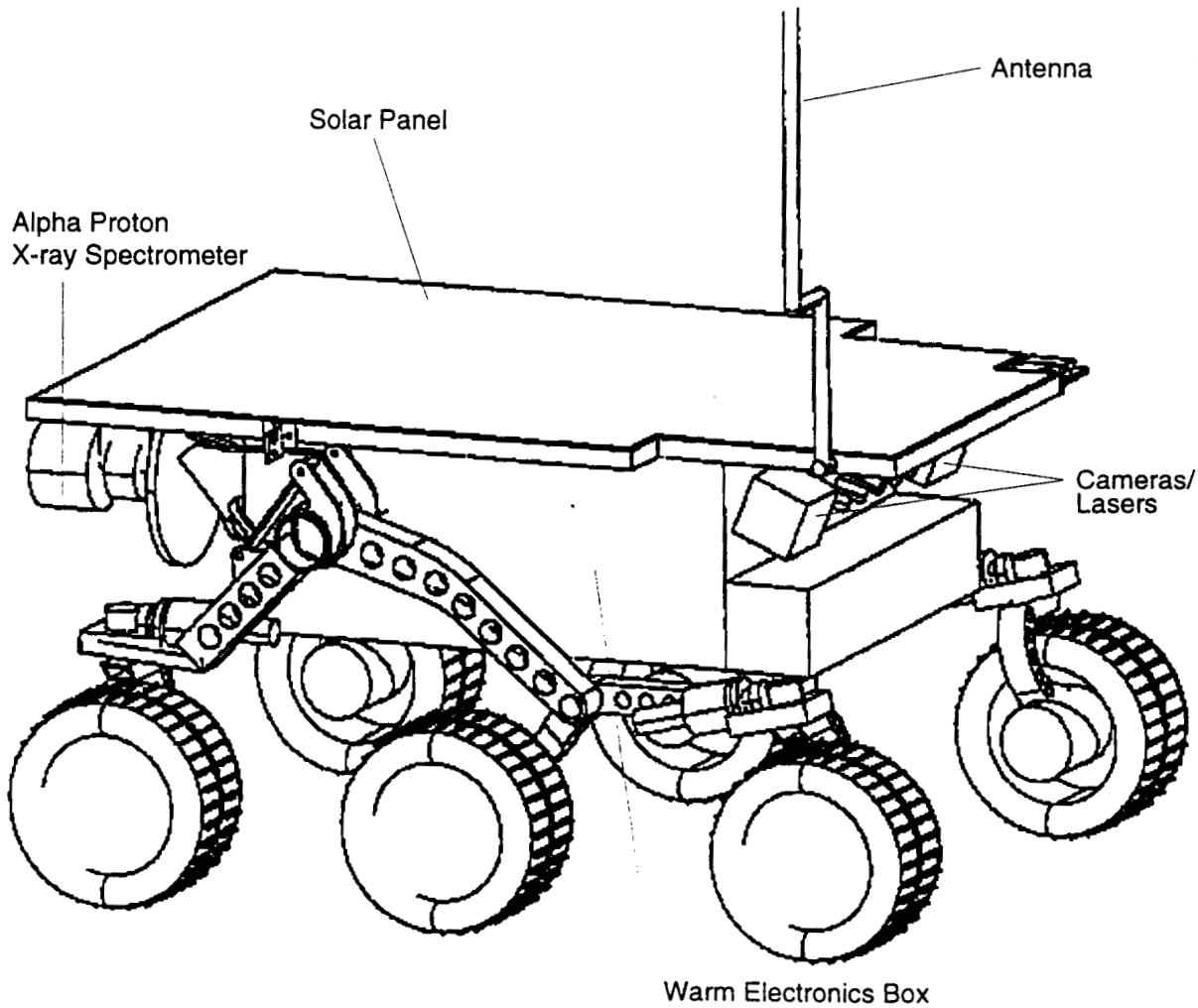

Mars Pathfinder's Sojourner rover

REPRODUCED AT GOVT. EXPENSE

During interplanetary cruise, the spacecraft requires 178 watts of electrical power, provided by 27 square feet (2.5 square meters) of gallium arsenide solar cells. On the Martian surface, more solar cells will be exposed to the Sun than during cruise and, with batteries, will provide 850 watt-hours on clear days and half that amount of power on days when the Sun is obscured by dust.

The lander has three solar panels, each with an area of 35.5 square feet (3.3 square meters) and supplying 100 watt-hours of power per day. At night, the lander will operate on rechargeable silver zinc batteries with 40 amp hours.

The Pathfinder lander carries a camera on a mast to survey its immediate surroundings. The camera has two optical paths for stereo imaging, each with a filter wheel giving 12 spectral bands in the 0.35 to 1.1 micron range. Its field-of-view is 14 degrees in both horizontal and vertical directions, and it will be able to take one frame (256 by 256 pixels) every two seconds.

Sojourner rover. Sojourner, the small rover onboard Mars Pathfinder, was named after an African American reformist, Sojourner Truth, who lived during the tumultuous era of the American Civil War and made it her mission to "travel up and down the land" advocating the rights of all people to be free. The name was chosen by a panel of judges from the Jet Propulsion Laboratory and the Planetary Society following a year-long, worldwide competition in which students up to 18 years old were invited to select heroines and submit essays about their historical accomplishments. Sojourner Truth was shortened to Sojourner because it means "traveler."

Sojourner with its mounting and deployment equipment weighs about 38.5 pounds (17.5 kilograms) at launch. Once it is mobile and operating on the Martian surface, it will weigh a mere 22 pounds (10 kilograms). The vehicle travels 0.4 inch (1 centimeter) per second and is about 2 feet (65 centimeters) long by 1.5 feet (48 centimeters) wide by 1 foot (30 centimeters) tall. During the cruise to Mars, it will be folded in its stowage space and measure only 7 inches (18 centimeters) tall.

Equipped with three cameras — a forward stereo system and rear color imaging system — the Sojourner rover will take several images of the lander to assess the lander's health.

Sojourner is powered by a 1.9-square-foot (0.2-square-meter) solar array, sufficient to power the rover for several hours per day, even in the worst dust storms. As a backup and augmentation, lithium sodium dioxide D-cell batteries are enclosed in the rover's thermally protected warm electronics box. Thermal protection is provided by a nearly weightless material called silica aerogel. Three radioisotope heater units (RHUs) -- each about the size of a flashlight battery -- contain small amounts of plutonium-238 which gives off heat to keep the rover's electronics warm.

The rover's wheels and suspension use a rocker-bogie system that is unique in that it does not use springs. Rather, its joints bend and conform to the contour of the ground, provid-

REPRODUCED AT GOVT. EXPENSE

ing the greatest degree of stability for traversing rocky, uneven surfaces. A six-wheel chassis was chosen over a four-wheel design because it provides greater stability. For instance, one side of Sojourner could tip as much as 60 degrees as it climbed over a rock without tipping over. The wheels are 5 inches (13 centimeters) in diameter and made of stainless steel foil. Cleats on the wheels provide traction and each wheel can move up and down independently of all the others. Three motion sensors along Sojourner's frame can detect excessive tilt and stop the rover before it gets dangerously close to tipping over. Sojourner is capable of scaling a boulder on Mars that is more than 10 inches (25 centimeters) high and keep on going.

The rover will also perform a number of technology experiments designed to provide information that will improve future planetary rovers. These experiments include: terrain geometry reconstruction from lander/rover imaging; basic soil mechanics by imaging wheel tracks and wheel sinkage; and dead reckoning, path reconstruction and vision sensor performance of the rover.

In addition, Sojourner experiments will also determine vehicle performance; rover thermal conditions; effectiveness of the radio link; and material abrasion by sensing the wear on different thicknesses of paint on a rover wheel.

Scientists will study adherence of Martian crustal material by measuring dust accumulation on a reference solar cell that has a removable cover, and by directly measuring the mass of accumulated dust on a quartz crystal microbalance sensor.

The rover's control system calls for the human operator to choose targets and for the rover to autonomously control how it reaches the targets and performs tasks. The onboard control system is built around an Intel 80C85 processor, selected for its low cost and resistance to single-event upsets from certain types of radiation. It is an 8-bit processor which runs at about 100,000 instructions per second.

Sojourner also carries an alpha proton x-ray spectrometer which must be in contact with rocks or soil to measure the chemical composition of the material being studied.

Science Objectives

Mars Pathfinder carries a suite of instruments and sensors to accomplish a focused set of science investigations. These investigations include: studying form and structure of the Martian surface and its geology; examining the elemental composition and mineralogy of surface materials; conducting a variety of atmospheric science investigations; and investigating the rotational and orbital dynamics of the planet from two-way ranging and Doppler tracking of the lander.

In the first few days of the mission, the lander's stereo color imager will take several panoramic photographs of the Martian landscape. Scientists will use the imaging system to study Martian geologic processes and interactions between the surface and atmosphere. The imaging system will be able to observe the general physical geography, surface slopes and rock distribution of the surface so that scientists can understand the geological processes that created

REPRODUCED AT GOVT. EXPENSE

and modified Mars. Panoramic stereo imaging will take place at various times of the day, as well as before and after the imager is deployed on its pop-up mast. In addition, observations over the life of the mission will reveal any changes in the scene over time that might be caused by frost, dust or redistribution of sand, erosion or other surface-atmosphere interactions.

The rover will also take closeup images of the terrain during its travels. A basic understanding of soil mechanics will be obtained by rover and lander imaging of rover wheel tracks, holes dug by rover wheels and any surface disruptions that have been caused by airbag bouncing and/or retraction.

The rover's alpha proton x-ray spectrometer will measure the elemental composition of rocks and surface soil and determine their mineralogy. These data will provide a "ground truth" for orbital remote-sensing observations being obtained overhead by Mars Global Surveyor and the Mars '96 orbiter. Results will help scientists understand more about the crust of Mars, how it evolved into different feature types, and how weathering has affected surface features.

During Pathfinder's entry and descent, an atmospheric instrument will study pressure, temperature and density of the atmosphere at various altitudes, beginning at about 75 miles (120 kilometers) above the surface and continuing all the way down to the ground. This profile will be compared with the last profiles taken 20 years ago by the two Viking landers. Wind speed and direction will be determined by a wind sensor on top of the lander mast, along with three wind socks on the mast, to reveal more information about the forces present in the Martian atmosphere which act on small surface particles and draw them to the wind.

Orbital and rotational dynamics will be studied using two-way X-band ranging and Doppler tracking of the Mars Pathfinder lander by NASA's Deep Space Network. Ranging, which is achieved by bouncing radio signals from Earth off the lander and then measuring the amount of time it takes to receive the returned signal, will provide an accurate measurement of the distance from a tracking station on Earth to Ares Vallis. After a few months of such tracking, scientists expect to know the location of the Pathfinder lander to within a few meters (yards) of accuracy.

Once the location of the lander is known, the pole of rotation of the planet can be determined. Knowledge of the orientation of Mars' pole of rotation will allow scientists to calculate the planet's precession -- gradual gyration of the planet's rotational axis over the course of many centuries that causes its north pole to point to different locations in space. Such information should validate or disprove theories about Mars' interior, such as whether the planet has a metallic core, and shed new light on the forces which cycle volatiles between the Martian atmosphere and its poles.

The Landing Site

NASA has selected an ancient flood plain on Mars as the Mars Pathfinder landing site. Called Ares Vallis, the rocky plain was the site of great floods when water flowed on Mars eons ago. The site — at 19.5 degrees north latitude, 32.8 degrees west longitude — is about 525

REPRODUCED AT GOVT. EXPENSE

miles (850 kilometers) southeast of the location of Viking Lander 1, which in 1976 became the first spacecraft to land on Mars. Pathfinder will be the first craft to land on Mars since the twin Viking landers arrived more than 20 years ago. The spacecraft, scheduled to land on Mars on July 4, 1997, will parachute down to Ares Vallis at the mouth of an ancient outflow channel chosen for the variety of rock and soil samples it may present.

Some constraints on the location were the result of engineering considerations. Since the Mars Pathfinder lander and Sojourner rover are solar-powered, the best site would be one with maximum sunshine; in July, 1997, the Sun will be directly overhead at 15 degrees north Martian latitude. The location's elevation had to be as low as possible so the descent parachute would have sufficient time to open and slow the lander to the correct terminal velocity. The landing will be within a 60- by 120-mile (100- by 200-kilometer) ellipse around the targeted site due to uncertainties in navigation and atmospheric entry.

A number of potential sites were considered where ancient flood channels empty into Chryse Planitia. Among them were Oxia Palus, a dark highlands region that contains highland crust and dark wind-blown deposits; Maja Valles Fan, a delta fan which drained an outflow channel; and the Maja Highlands, just south of Maja Valles. All of the sites were studied using Viking orbiter and Earth-based radar data.

The importance of the landing site on the potential scientific return was the driving factor in the scientific community's choice of a landing site. In 1994, more than 60 scientists from the United States and Europe participated in a workshop to recommend a landing site for Pathfinder. More than 20 individual landing sites were proposed before Ares Vallis was chosen.

Ares Vallis met several general criteria. First, it was a "grab bag" location, set at the mouth of a large outflow channel in which a wide variety of rocks would be potentially within reach of the rover. Even though the exact origins of the samples would not be known, since many rocks washed onto the plain from highlands in ancient floods, the chance to sample a variety of rocks in a small area could reveal much about Mars. In addition, scientists wanted to choose a site that contained highland rocks because they make up two-thirds of the crust of Mars. With highland samples, they would be able to address questions about the early evolution of both the crust and the Martian environment. This was of particular interest to exobiologists, who are interested in beginning their search for evidence of life -- extinct or existing -- by first surveying the rock types in the highlands to find out if Mars had an early environment that was suitable for the beginnings of life.

Once the site was selected, scientists fanned out until they found a geological site very similar to Ares Vallis on Earth which they could study firsthand. In September 1995, planetary scientists traveled to the Channeled Scabland, near the cities of Spokane and Moses Lake, in central eastern Washington State to examine landforms and geologic features created by one or more giant, catastrophic floods which swept through the area as the North American continent thawed from an ice age.

The Scabland formed when waters with the volume of Lake Erie and Lake Ontario com-

REPRODUCED AT GOVT. EXPENSE

bined broke through a glacial dam and flooded the region in just two weeks. The flooding carved landforms and geologic features similar to those on Mars' Ares Vallis, and created Lake Missoula, Montana. The site was an ideal Earth-based laboratory for studying landing site conditions and testing rover mobility.

Mars Pathfinder will be the first mission to characterize the rocks and soils in a landing area over hundreds of square yards (or meters) on Mars. The new information will provide a calibration point or "ground truth" for remote-sensing observations taken by orbiters that are surveying the planet's surface.

Planetary Protection Requirements

The U.S. is a signatory to the United Nation's Treaty of Principles Governing the Activities of States in the Exploration and Use of Outer Space, Including the Moon and Other Celestial Bodies. Known as the "Outer Space Treaty," this document states in part that exploration of the Moon and other celestial bodies shall be conducted "so as to avoid their harmful contamination and also adverse changes in the environment of the Earth resulting from the introduction of extraterrestrial matter."

NASA policy establishes basic procedures to prevent contamination of planetary bodies. Different requirements apply to different missions, depending on which solar system object is targeted and the spacecraft or mission type (flyby, orbiter, lander, sample-return, etc.). For some bodies such as the Sun, Moon and Mercury, there are no outbound contamination requirements. Current requirements for the outbound phase of missions to Mars, however, are particularly rigorous. Planning for planetary protection begins during pre-mission feasibility planning.

Planetary protection requirements called for Pathfinder's surfaces to contain a maximum of about 250 spores per square yard (300 spores per square meter). To meet this goal, the spacecraft was cleaned to a level consistent with the Viking spacecraft before they were sterilized. Technicians continually cleaned the spacecraft throughout development by rubbing down surfaces with an alcohol solution. Large surface areas, such as the airbags and parachute, had to be baked for about 50 hours at 230 degrees F (110 degrees C). The spacecraft will be checked constantly during processing at Kennedy Space Center and given a final planetary protection inspection just before its integration with the Delta II launch vehicle.

Science Experiments

Mars Pathfinder and its rover carry several science instruments that will image terrain in the vicinity of the landing site, explore the composition of rocks and make measurements of the Martian atmosphere. The payload of science instruments includes:

- **Imager.** The camera on the lander is a stereo imaging system with color capability provided by a set of selectable filters for each of the two camera channels. It has been developed by a team led by the University of Arizona, with contributions from the Lockheed Martin

REPRODUCED AT GOVT. EXPENSE

Corp., Max Planck Institute for Aeronomy in Mainz, Germany, Technical University of Braunschweig in Germany and the Ørsted Laboratory, Niels Bohr Institute for Astronomy, Physics and Geophysics, in Copenhagen, Denmark. Principal Investigator is Dr. Peter Smith, Arizona State University, Tempe.

The imager consists of three physical subassemblies: a camera head with stereo optics, filter wheel, charge-coupled device and pre-amplifier, mechanisms and stepper motors; an extendable mast with electronic cabling; and two plug-in electronics cards which plug into slots in the warm electronics box within the lander. Full panoramas of the landing site are acquired during the mission using the stereo baseline provided by the camera optics. Multispectral images of a substantial portion of the visible surface may be acquired with as many as eight spectral bands.

A number of atmospheric investigations are carried out using imager photographs. Aerosol opacity is measured periodically by imaging the Sun through two narrow-band filters. Dust particles in the atmosphere are characterized by observing one of Mars' moons, Phobos, at night as well as the Sun during the day. Water vapor abundance is measured by imaging the Sun through filters in the water vapor absorption band and in the spectrally adjacent continuum. Images of wind socks located at several heights above the surrounding terrain are used to assess wind speed and direction.

A magnetic properties investigation is included as part of the imaging investigation. A set of magnets of differing field strengths will be mounted to a plate and attached to the lander. Images taken over the duration of the landed mission are used to determine the accumulation of magnetic species in the wind-blown dust. Multispectral images of these accumulations may be used to differentiate among likely magnetic minerals.

The imaging investigation also includes the observation of wind direction and speed using wind socks are located at various heights on a mast. The wind socks will be imaged repeatedly by the imager; orientations of the wind socks will be measured in the images to determine the wind velocity at three different heights above the surface. This information can then be used to estimate the aerodynamic roughness of the surface in the vicinity of the lander, and to determine the variation in wind speed with height. Because the Viking landers had wind sensors at only one height, such a vertical wind profile has never been measured on Mars.

This new knowledge will help to develop and modify theories for how dust and sand particles are lifted into the Martian atmosphere by winds, for example. Because erosion and deposition of wind-blown materials has been such an important geologic process on the surface of Mars, the results of the wind sock experiment will be of interest to geologists as well as atmospheric scientists.

- **Alpha Proton X-Ray Spectrometer.** This instrument is designed to determine the elements that make up the rocks and soil on Mars. It is a derivative of instruments flown on the Russian Vega and Phobos missions and identical to the unit planned for flight on the

REPRODUCED AT GOVT. EXPENSE

Russian Mars '96 landers. Thanks to the mobility provided by the Mars Pathfinder rover, the alpha proton x-ray spectrometer can not only take spectra measurements of the Martian dust but, more importantly, may be moved to distinct rock outcroppings, permitting analysis of the native rock composition for the first time. The alpha and proton portions are provided by the Max Planck Institute, Department of Chemistry, Mainz, Germany. The x-ray spectrometer portion is provided by the University of Chicago. Principal Investigator is Dr. Rudolph Rieder of the Max Planck Institute for Chemistry; co-investigators are Dr. Thanasis Economou of the University of Chicago and Dr. Henry Wänke of the Max Planck Institute for Chemistry.

The instrument can measure the amounts of all elements present except hydrogen, as long as they make up more than about 1/10th of 1 percent of the mass of the rock or soil.

The instrument works by bombarding a rock or soil sample with alpha particle radiation -- charged particles that are equivalent to the nucleus of a helium atom, consisting of two protons and two neutrons. The source of the particles is small pieces of the radioactive element curium-244 onboard the instrument. In some cases, the alpha particles interact with the rock or soil sample by bouncing back; in other cases, they cause x-rays or protons to be generated. The "backscattered" alpha particles, x-rays and protons that make it back into the detectors of the instrument are counted and their energies are measured. The number of particles counted at each energy level is related to the abundances of various chemical elements in the rock or soil sample, and the energies are related to the types of elements present in the sample. A high-quality analysis requires about 10 hours of instrument operation while the rover is stationary; it may be done at any time of day or night.

Most of the instrument's electronics are located on the rover in a container called the warm electronics box. Cables run from that box to the instrument sensor head, which contains the radioactive sources and particle detectors. The instrument sensor head is held by a robotic arm attached to the back of the rover. This arm has a flexible "wrist" and can place the sensor head in contact with rocks and soil at various angles depending on how rough the rocks or soils might be. Sensors on a bumper ring attached to the sensor head indicate to the rover when adequate contact has been made with the sample rock or soil. When the sensor head is in position, it analyzes an area of rock or soil within a circle 2 inches (5 centimeters) across. Additional information about the rock or soil can be obtained by taking pictures of it using a small color camera on the back of the rover, or by rotating the rover and imaging it with stereo cameras on the front of the rover.

- **Atmospheric Structure Instrument/Meteorology Package.** The atmospheric structure instrument and meteorology package — or ASI/MET — is an engineering subsystem which acquires atmospheric information during the descent of the lander through the atmosphere and during the entire landed mission. It is implemented by JPL as a facility experiment, taking advantage of the heritage provided by the Viking mission experiments. Dr. Alvin Seiff of San Jose State University, San Jose, CA, was the instrument definition team leader. The science team that will use the data acquired by the package will be selected before launch.

REPRODUCED AT GOVT. EXPENSE

Data acquired during the entry and descent of the lander permit reconstruction of profiles of atmospheric density, temperature and pressure from altitudes in excess of about 60 miles (100 kilometers) from the surface.

The accelerometer portion of the atmospheric structure instrument depends on the attitude and information management subsystem of the lander. It consists of sensors on each of three spacecraft axes. The instrument is designed to measure accelerations over a wide variety of ranges from the micro-G accelerations experienced upon entering the atmosphere to the peak deceleration and landing events in the range of 30 to 50 G's.

The ASI/MET instrument hardware consists of a set of temperature, pressure and wind sensors and an electronics board for operating the sensors and digitizing their output signals. Temperature is measured by thin wire thermocouples mounted on a meteorological mast that is deployed after landing. One thermocouple is placed to measure atmospheric temperature during descent; three more are located to monitor atmospheric temperatures at heights of about 10, 20 and 40 inches (25, 50 and 100 centimeters) above the Martian surface after landing. Pressure is measured by a Tavis magnetic reluctance diaphragm sensor similar to that used by Viking, both during descent and after landing. The wind sensor employs six hot wire elements distributed uniformly around the top of the mast. Wind speed and direction about 40 inches (100 centimeters) above the Martian surface are derived from the temperatures of these elements.

REPRODUCED AT GOVT. EXPENSE

Mars '96

Mars '96 is a Russian mission consisting of an orbiter with about a dozen instruments and a variety of smaller devices which will be placed in a highly elliptical, 43-hour orbit about Mars, as well as two small landers and two penetrators designed to conduct a variety of surface studies. Included in the payload are two U.S. experiments, the Mars Oxidation Experiment and the Tissue-Equivalent Proportional Counter.

The mission is the second stage of a long-term program of Martian exploration planned by Russia. The first stage of the Russian program was to study Mars from space, using spacecraft that would be placed in orbits near one of Mars' moons, Phobos. Launched on July 7 and 12, 1988, Phobos-1 and Phobos-2 were lost during their missions. Following Mars '96, Russian plans call for a third stage of exploration with the delivery of a lander and rover to the surface of Mars.

Mission Overview

Launch and cruise. Mars '96 will be launched on a Russian Proton, a heavy-lift launcher comparable to the U.S. Titan 4, during a window that opens on November 12, 1996, from Baikonur Cosmodrome in Kazakstan. Although the window opens on November 12, the Russian space agency will not attempt a launch until November 16, the ideal launch day. The launch window on November 16 opens at about 11:03 p.m. Moscow time (20:03 Universal Time, or 3:03 p.m. U.S. Eastern Standard Time).

The Proton's four stages will place the spacecraft into an orbit 102 miles (165 kilometers) above Earth inclined to the plane of the ecliptic at 51.6 degrees. At the end of the first orbit around Earth, the Proton's fourth stage will be reignited to provide an additional boost of energy necessary to place the spacecraft into the proper trajectory to Mars. The remaining energy needed for trans-Mars injection will be provided by the Mars '96 spacecraft's onboard propulsion module. The spacecraft's antennas will be deployed after the final burn of the Proton's fourth stage and before the burn of the Mars '96 spacecraft's propulsion module. The solar arrays and instrument platforms will be deployed after the first trajectory correction maneuver is performed.

After a 10-month cruise, the spacecraft is scheduled to arrive at Mars on September 12, 1997. Two midcourse corrections are planned during cruise; the first will occur seven to 10 days after launch, and the second will be performed about one month before arrival at Mars. A third trajectory correction maneuver will occur in conjunction with the orbiter deflection maneuver about four or five days before Mars orbit insertion.

Small stations deployment. Five days before arrival at Mars, two "small stations" will be separated from the orbiter; the orbiter will then perform a deflection maneuver to place it on course for Mars orbit insertion. The two stations will approach Mars independently and enter

REPRODUCED AT GOVT. EXPENSE

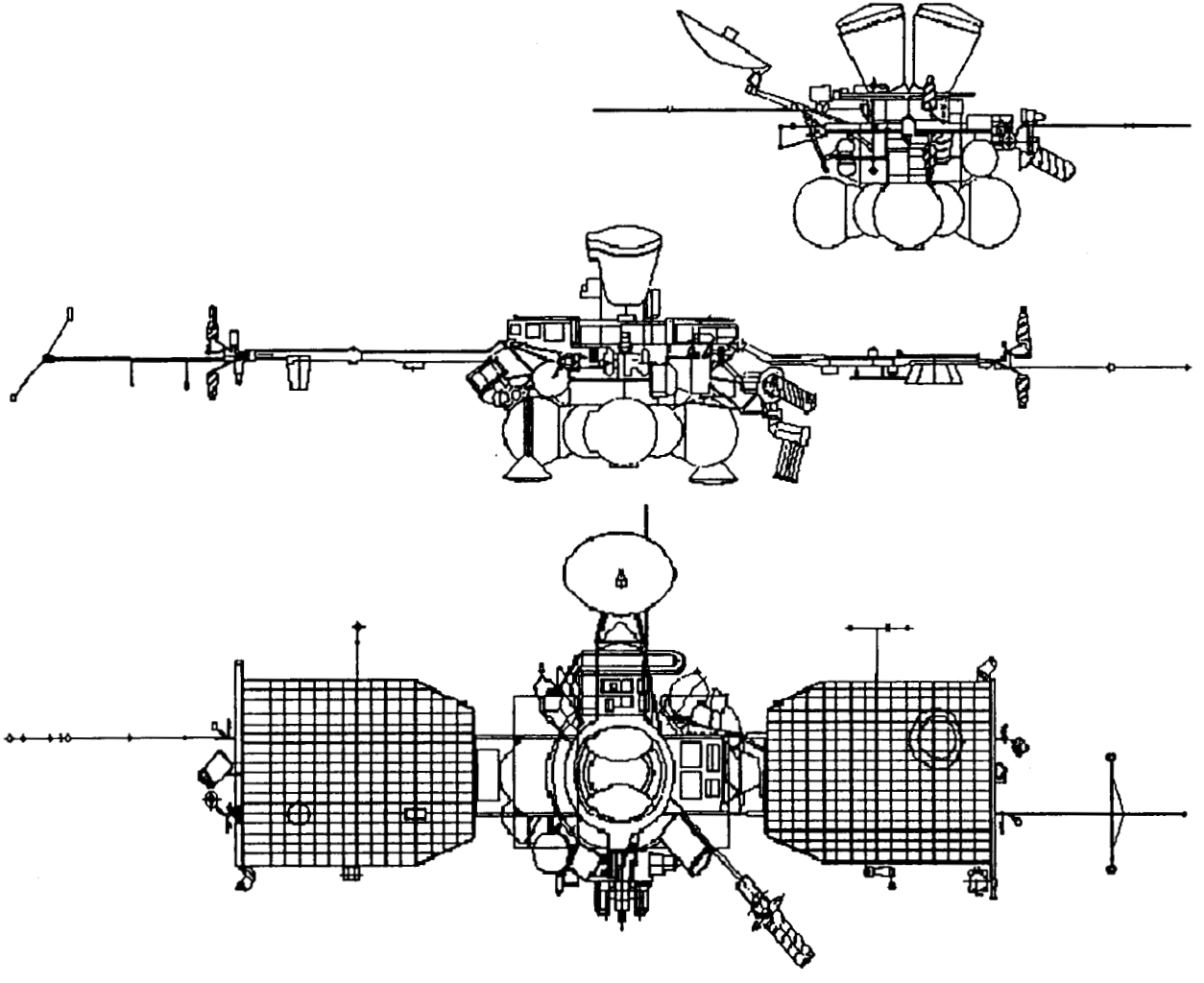

Mars '96 orbiter (three views)

REPRODUCED AT GOVT. EXPENSE

Mars' atmosphere at about 12,600 miles per hour (5.75 kilometers per second) at an angle of between 10.5 and 20.5 degrees, landing in Amazonis Planitia.

The small stations use a landing technology very similar to that of Mars Pathfinder. Each small station is first braked by an aeroshell as it passes through Mars' upper atmosphere; later, it descends on a parachute. As the small station nears Mars' surface, two airbags inflate to cushion the final impact. After some bouncing -- as much as 230 feet (70 meters) on the first bounce -- the assembly comes to a rest. Laces that hold the airbags together are released and the airbags spring apart; the lander falls about one yard (or meter) to the ground. This technology was successfully used on Earth's Moon for the first Soviet landers in the 1960s.

Mars orbit insertion. As the Mars '96 orbiter reaches periapsis, or the closest point in its orbit around Mars, its propulsion system will be automatically fired to place the orbiter into an initial orbit with a period of about 50 hours. The spacecraft will travel in an elliptical orbit of about 310 by 32,300 miles (500 by 52,000 kilometers), passing closest over Mars' northern hemisphere.

Following Mars orbit insertion, the periapsis altitude will be adjusted to 185 miles (300 kilometers). Several additional orbit maneuvers will be performed between seven days and 28 days after Mars orbit insertion to position the spacecraft for communications with Earth.

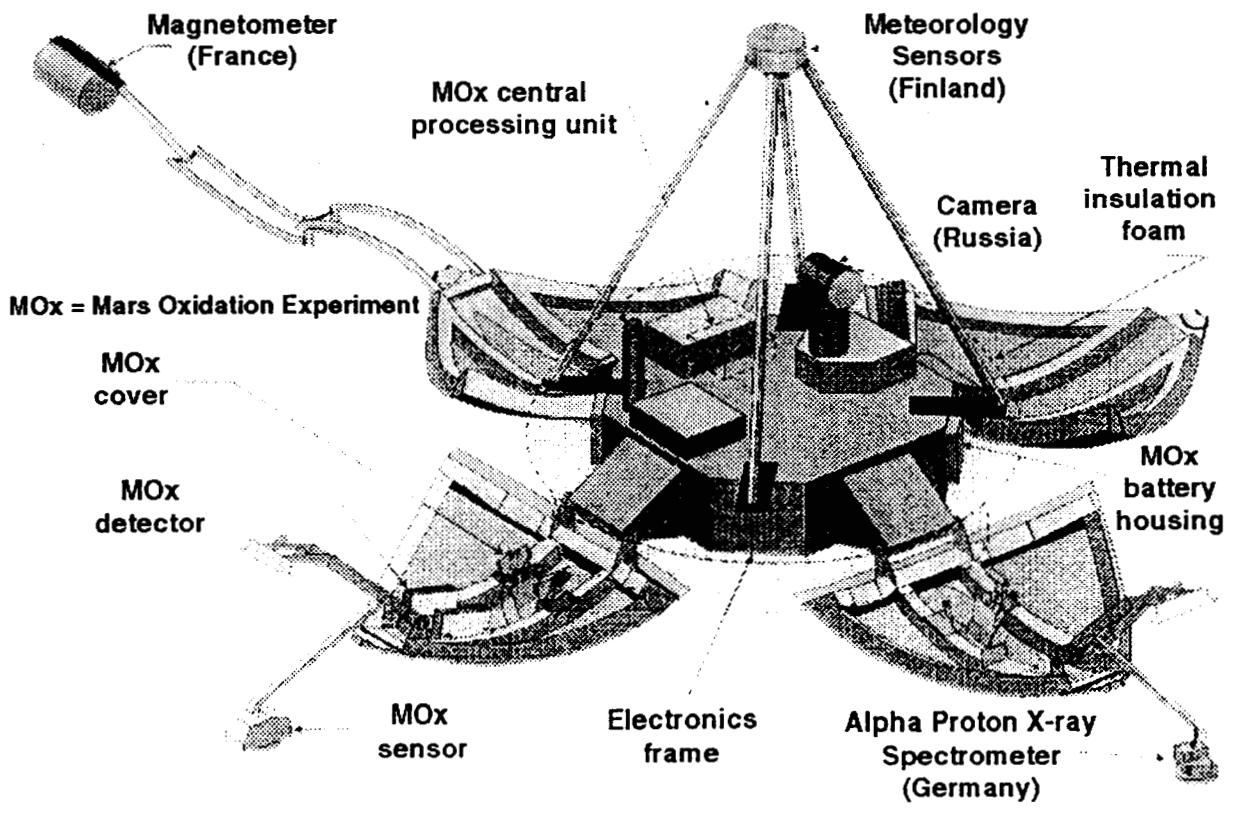

Mars '96 small station

REPRODUCED AT GOVT. EXPENSE

Penetrator release. The spacecraft also carries two penetrators which will be released sometime between seven and 28 days after Mars orbit insertion. The intent is to deploy one of the penetrators close to the small stations and the other at a greater distance, at least 90 degrees longitude away. If the orbit adjustments take longer, however, or if dust storms begin to sweep over the planet, both penetrators can be deployed during the same telecommunications pass with Earth. Under these conditions, the penetrators will land less than 5 to 6 degrees apart. It is possible to deploy both penetrators on a single orbit.

During each deployment, the orbiter will first be properly oriented. The penetrator to be released will be spun about its longitudinal axis for stability, then ejected. After the penetrator moves a safe distance away from the orbiter, it will fire a solid rocket motor that will place it into an atmospheric entry trajectory. Entry will occur about 21 to 22 hours later.

Once within the Martian atmosphere, each probe undergoes aerodynamic braking, first using a rigid cone and then an air-inflated braking device, until a given velocity is reached to provide penetration into the Martian soil. The entry velocity is 10,960 miles per hour (4.9 kilometers per second) at an entry angle of about 12 degrees, plus or minus 2 degrees.

The desired landing site is within an ellipsis about 150 by 20 miles (240 by 30 kilometers). As the penetrator impacts the surface at a velocity of about 180 to 220 miles per hour (80 to 100 meters per second), the forebody will separate from the aftbody. The penetrating portion of the probe forebody, carrying scientific and housekeeping instruments, will be lodged about 3 to 20 feet (1 to 6 meters) below the surface, while the rest of the instrument remains on the surface. Data from the probes will be relayed to Earth via the orbiter.

Orbital operations. Mars '96 orbital operations include two subphases: support for the landed packages and orbital mapping. The orbital period will be adjusted to permit relay of the lander data. The orbital period permits the orbiter to receive data from each of the landers for about 5 to 6 minutes every seven days. Minor orbit corrections will be performed once a month to maintain the communications link with the landers.

Once the penetrators have landed, the orbiter propulsion module will be jettisoned and one of the two science platforms will be deployed. After 50 to 60 days, the orbit's periapsis will gradually shift to a portion of Mars in daylight during each pass, and the orbiter's surface and atmospheric instruments will be used. The best lighting conditions will occur about 90 days after arrival at Mars. At this time, the orbital period will be adjusted to permit a 1 degree shift of ground tracks every four days. After this adjustment, the orbiter will not be able to view the landers for data relay. Data relay will be supported by NASA's Mars Global Surveyor orbiter, which will store and process data for transmission back to Earth.

Tracking of the spacecraft from Russia's Evapatoria and Ussurijsk facilities will vary from a maximum of about eight hours per day to about 6.5 hours per day two months after Mars orbit insertion. Mars '96 will also be tracked by NASA's Deep Space Network tracking facilities.

REPRODUCED AT GOVT. EXPENSE

Spacecraft

Mars '96 consists of an orbiter and four landers, two small, moderately soft landers and two penetrators. The orbiter is about 10 by 10 by 30 feet (3 by 3 by 9 meters) and weighs about 13,200 pounds (6,000 kilograms). The orbiter is a three-axis-stabilized system, with two platforms capable of pointing and stabilizing several optical instruments.

The science payload includes 12 instruments for studying the Martian surface and atmosphere, seven instruments for studying plasma and three instruments for conducting astrophysical studies. The instruments were furnished by the Institute of Space Research and other institutions of the Russian Academy of Sciences, in addition to many countries of Europe.

Several instruments are mounted on the two small stations and the two penetrators to study surface and atmospheric features from Mars' surface.

In their cruise configuration, each of the small stations is 3.2 feet wide by 3.2 feet high (1 meter by 1 meter) and weighs 110 pounds (50 kilograms). Landed, each station with its deployed petals will lay flat at 42.5 by 23 inches high (1.08 meters by 0.59 meter).

Each penetrator is approximately 6.5 feet (2 meters) long and 2 feet (0.6 meters) in diameter and weighs about 143 pounds (65 kilograms). Each penetrator contains equipment and sensors to study the geophysical and mechanical properties of Martian rocks. The experiments are designed to last about one year so that seasonal variations in measurements may be recorded.

Science Objectives

The goal of Mars '96 is to investigate the evolution of the Martian atmosphere, surface and interior. The mission is designed to acquire, with a variety of instruments, wide-scale, comprehensive measurements of the physical and chemical processes that occur on Mars today and which took place in the past.

Mars '96 carries an international suite of remote-sensing instruments, including two cameras from Germany and a spectrometer from France; other nations are involved as well. The small stations will carry French magnetometers, seismometers and descent imagers. They will include German spectrometers, Finish meteorological instruments and computers, Hungarian software and American soil oxidation experiments, as well as Russian science instruments. About 30 U.S. co-investigators are associated with the Mars '96 orbiter science team.

The newest element of Mars '96 is the addition of the penetrators, shaped like large darts, which will carry out studies of the Martian soil over time. Penetrators somewhat similar to the Russian penetrators will be flown by the United States in 1998 to augment these soil experiments. With mission lifetimes of about 700 days, the Russian penetrators are designed to study geophysical, meteorological and seismic investigations, and to provide television pictures

REPRODUCED AT GOVT. EXPENSE

of the surface. The instruments are targeted for landing sites near the equator of Mars or around middle latitudes of 20 to 30 degrees in the northern hemisphere.

Specific science goals include:

- **Mars Surface.** Topographic survey of the surface, including high-resolution studies of the terrain; mineralogical mapping; elemental composition of the soil; studies of the subsurface ice and its deep structure.

- **Atmosphere and Climate Monitoring.** Studies of Martian meteorology and climate; abundance of minor components in the atmosphere (water, carbon monoxide, etc.), their variation , vertical distribution and a search for regions with higher humidity; measurement of the three-dimensional field of atmospheric temperatures; pressure variations of different space and time scales; typical features of the atmosphere near volcanoes; characteristics of atmospheric aerosols; neutral and ion compositions of the upper atmosphere.

- **Inner Structure (Geophysics).** Crustal thickness; magnetic field; heat flow; search for active volcanoes; seismic activity.

- **Plasma.** Parameters of the Martian magnetic field, its momentum and orientation; three-dimensional distribution of the ion and energy composition of plasmas (near Mars and along the Earth-Mars trajectory); plasma wave characteristics (electric and magnetic fields); structure of the magnetosphere and its boundaries.

- **Astrophysical Studies.** Localization of cosmic gamma-ray bursts; oscillations of stars and the Sun.

Science Experiments

The Mars '96 scientific payload to study the Martian surface, atmosphere and interior includes the following instruments:

- **Stereo spectral imaging system (ARGUS).** Includes a multifunctional stereoscopic high-resolution digital camera, including the memory system, thermal control system and calibration system; a wide-angle stereoscopic digital camera; a visible and infrared mapping spectrometer; and a navigation camera.

- **Planetary infrared Fourier spectrometer.**

- **Mapping radiometer.**

- **Mapping high-resolution spectro-photometer.**

- **Multichannel optical spectrometer.**

REPRODUCED AT GOVT. EXPENSE

- ❑ **Ultraviolet spectro-photometer.**
- ❑ **Long-wave radar.**
- ❑ **Gamma spectrometer**
- ❑ **Neutron spectrometer.**
- ❑ **Quadrapole mass spectrometer.**
- ❑ **Energy-mass ion spectrograph and neutral-particle imager.**
- ❑ **Fast omnidirectional non-scanning energy-mass ion analyzer.**
- ❑ **Omnidirectional ionospheric energy-mass spectrometer.**
- ❑ **Ionospheric plasma spectrometers.**
- ❑ **Electron analyzer and magnetometer.**
- ❑ **Wave complex.**
- ❑ **Low-energy charged particle spectrometer.**
- ❑ **Precision gamma spectrometer** (detector provided by United States).
- ❑ **Cosmic and solar gamma-burst spectrometer.**
- ❑ **Stellar oscillations photometer.**

U.S. Contributions to Mars '96

In addition to the above suite of instruments, Russia's Mars '96 also carries two U.S. experiments, the Mars Oxidation Experiment and the Tissue-Equivalent Proportional Counter.

Mars Oxidation Experiment. The experiment will measure the oxidation rate of the Martian environment. In the basic measurement scheme, a detector monitors the change in reflectivity of a thin chemical film which is exposed to the Martian soil or atmosphere. The instrument design is narrowly constrained by mass, volume and power limitations. The total mass is 3 pounds (1.3 kilograms), and all operating power is supplied by internal batteries.

REPRODUCED AT GOVT. EXPENSE

Upon landing and deployment, the instrument operates autonomously, according to a sequence programmed into internal read-only memory. The instrument is designed with a one-year lifetime, but actual operating life is limited by the internal batteries. With all batteries operating, the lifetime is 160 days. Allowing for failure of an individual cell, the minimum lifetime is 80 days.

The instrument's sensor head, which is deployed from one petal of the Russian small station, is comprised of eight sensor cell assemblies, four of which are designed to contact the soil, with the other four exposed to the atmosphere. Within each cell assembly, there are six active sensing sites and six reference sites, for a total of 96 sites. The active sites are protected by a thin membrane of silicon nitride, which protects the sensor films from premature oxidation. These membranes are broken upon deployment, exposing the active films. The reference sites are permanently sealed. The sensor films have been selected to provide a broad range of chemical reactions. Each film type is duplicated in the air and soil cells.

Each of the 96 sensor sites is illuminated by two light-emitting diodes (LEDs), one operating at a wavelength of 590 nanometers and the other at 870 nanometers. The reflected signal is measured by a Reticon silicon photodiode detector array. The sensor sites are coupled to the LEDs and the detector through fiber optics.

Data will be stored in the instrument's own internal computer memory and read out in response to a request from the small station's data system. Command software is designed so that data acquisition takes priority over measurements. If a measurement is in process when telemetry is requested, it will be halted and then continued after the telemetry session is complete. Another feature of the data transmission protocol is that all data will be transmitted a total of three times to reduce the data loss associated with various link failures. During the mission, the experiment team will distribute calibration data and mission data sets in which data from the instrument are merged with pertinent mission information.

Tissue-Equivalent Proportional Counter (TEPC). The TEPC experiment was developed at NASA's Johnson Space Center, Houston, TX, to measure and store accumulated radiation spectra during the interplanetary cruise phase of the Mars '96 mission as well as upon arrival in Mars orbit. Such information should yield important insight into the space radiation environment and potential health risks involved in future human spaceflight.

The overall scientific objectives of the TEPC experiment are to measure the galactic cosmic ray environment between Earth and Mars; to obtain data on solar particle events over the Mars '96 mission's lifetime; and to ascertain with high accuracy the dose-vs.-shielding thickness relationships for these sources of interplanetary radiation. The TEPC and other instruments on Mars '96 will allow prediction of the radiation exposure to be encountered on future space missions; aid design of Mars and Moon vehicles and habitats with minimum mass shielding; offer increased confidence levels in the dose-vs.-shielding thickness relationship; and help decrease the need for expensive ground-based work.

REPRODUCED AT GOVT. EXPENSE

The TEPC spectrometer is part of an international suite of radiation instruments being flown on Mars '96 in a module called Radius M. The module contains a total of four international instruments: a French dosimeter, a Russian particle spectrometer, a Bulgarian dosimeter and the TEPC. Various versions of the TEPC insturment have been flown on the U.S. Space Shuttle and on the Russian Mir space station. Dr. Gautam Badhwar is the Principal Investigator for TEPC at Johnson Space Center.

REPRODUCED AT GOVT. EXPENSE

Program/Project Management

The Mars Global Surveyor and Mars Pathfinder missions are managed by the Jet Propulsion Laboratory for NASA's Office of Space Science, Washington, DC. The Mars Global Surveyor spacecraft was built by Lockheed Martin Astronautics Inc., Denver, CO. The Delta II launch vehicles were built by McDonnell Douglas Aerospace Corp., Huntington Beach, CA.

At NASA Headquarters, Dr. Jurgen Rahe is Science Director for Solar System Exploration. Dr. Joseph Boyce is Mars Program Scientist and Program Scientist for Mars Pathfinder. Donald Ketterer is Program Executive for Mars Pathfinder. Mary Kaye Olsen is Program Executive for Mars Global Surveyor, and Patricia Rogers is Associate Program Scientist. Kenneth Ledbetter is Director of the Mission and Payload Development Division.

At the Jet Propulsion Laboratory, Norman Haynes is Director for the Mars Exploration Directorate. Donna Shirley is Manager of the Mars Exploration Program. For Mars Global Surveyor, Glenn E. Cunningham is Project Manager and Dr. Arden Albee of the California Institute of Technology is Project Scientist. For Mars Pathfinder, JPL's Anthony Spear is Project Manager and Dr. Matthew Golombek is Project Scientist.

At the Russian Academy of Sciences Space Research Institute (IKI), Moscow, Russia, Dr. Albert A. Galeev is Scientific Leader of the Mars '96 mission and Director of the Russian Academy of Sciences. Professor Vassili I. Moroz is Deputy Scientific Leader. Dr. Alexandre Zakharov is Mars '96 Project Scientist. The Mars '96 spacecraft was developed by the Babakin Engineering Research Center of the Lavochkin Research and Production Association in Russia.

10-11-96

REPRODUCED AT GOVT. EXPENSE

News Release

National Aeronautics and
Space Administration

Washington, DC 20546
(202) 358-1600

Douglas Isbell
Headquarters, Washington, DC
(Phone: 202/358-1753)

Mary Beth Murrill
Jet Propulsion Laboratory, Pasadena, CA
(Phone: 818/354-5011)

For Release

October 15, 1996

RELEASE: 96-208

CASSINI SPACECRAFT READIED FOR "SHAKE AND BAKE" TESTS

NASA's Cassini spacecraft, scheduled for launch to the planet Saturn less than a year from now, is being prepared at the Jet Propulsion Laboratory (JPL), Pasadena, CA, for a series of so-called "shake and bake" tests that imitate the vibration forces and extreme temperatures the spacecraft will have to withstand during its upcoming launch and flight through space.

"We're ready to put Cassini through the toughest tests it will face before launch," said Cassini Program Manager Richard J. Spehalski of JPL. "These tests will prove Cassini has the right stuff to get to Saturn and do its job."

In coming days, the 35-foot-tall Cassini spacecraft structure will be transported to JPL test facilities where it will face enormous speakers that blast the spacecraft with acoustic vibrations like those it will encounter during launch. Engineers will then test the spacecraft's response to random vibrations it is expected to experience during flight. Finally, the spacecraft will be fitted with custom-made thermal blankets and subjected to the extreme hot and cold temperatures it will reside in once it is launched into space from Cape Canaveral, FL, on October 6, 1997.

Cassini will reach Saturn in July 2004. After entering orbit around the ringed planet, Cassini will make detailed observations of Saturn and its largest moon, Titan, some smaller icy moons and study the magnetic environment surrounding the planet over a four year period. The mission is an international effort of NASA, the European Space Agency (ESA) and the Italian Space Agency.

On October 11, JPL engineers and technicians completed the painstaking assembly of the spacecraft's major components with the installation of a model of the 8.8-foot (2.7-meter) diameter Huygens probe, provided by the ESA. The giant disk-shaped probe, covered with shiny amber-colored thermal blanketing, was fitted on the side of the

-more-

Cassini spacecraft. Huygens will be carried to Saturn then released by Cassini to drop, via parachute, into the thick atmosphere of Titan. Huygens will take scientific measurements and observations of Titan's atmosphere, which is thought to be chemically similar to that of Earth's earlt atmosphere before life began.

The Cassini Program is managed by JPL for NASA's Office of Space Science, Washington, DC.

-end-

NASA press releases and other information are available automatically by sending an Internet electronic mail message to domo@hq.nasa.gov. In the body of the message (not the subject line) users should type the words "subscribe press-release" (no quotes). The system will reply with a confirmation via E-mail of each subscription. A second automatic message will include additional information on the service. NASA releases also are available via CompuServe using the command GO NASA.

News Release

National Aeronautics and
Space Administration

Washington, DC 20546
(202) 358-1600

For Release

October 15, 1996

Douglas Isbell
Headquarters, Washington, DC
(Phone: 202/358-1753)

Mary Hardin
Jet Propulsion Laboratory, Pasadena, CA
(Phone: 818/354-5011)

Dirk Martin
University of Colorado, Boulder, CO
(Phone: 303/492-3140)

John Merritt
Texas A & M University, Galveston, TX
(Phone: 409/740-4559)

RELEASE: 96-209

TOPEX/POSEIDON HELPS MARINE BIOLOGISTS STUDY WHALES

Marine biologists aboard a ship in the Gulf of Mexico are using maps of ocean currents produced with data from the ocean-observing satellite TOPEX/POSEIDON to help them locate and count sperm whales and dolphins.

The TOPEX/POSEIDON altimeter data, combined with information from the European Space Agency's ERS-2 satellite, are being used in near-real-time to generate circulation feature maps that will be faxed to scientists aboard the research ship R/V Gyre. These maps provide scientists with timely information about rapidly changing ocean features so that scientists can direct the ship toward those areas to determine if whales and dolphins are present.

"There is evidence that whales prefer to feed in the edges of cyclonic eddies, and the satellite data gives us a good picture of where those oceanographic features are located," said Dr. George Born, a principal investigator on the TOPEX/POSEIDON project from the University of Colorado at Boulder.

The university is generating the ocean maps and sending them directly to the scientists in the Gulf. "The data from TOPEX/POSEIDON and ERS-2 greatly enhances our ability to identify and map circulation features as they occur in the Gulf," said Dr. Robert Leben, a co-principal investigator on the project at the University of Colorado at Boulder.

-more-

The R/V Gyre left Pascagoula, MS, on October 10 and will survey the northeastern Gulf of Mexico until October 28. A previous survey indicated that whales and dolphins were contacted most frequently in the area where warm water eddies break off from the Gulf Loop Current, a strong ocean current that circulates around the Gulf of Mexico.

"The goal of our cruise is to make a visual and acoustic census of marine mammals and to define their physical and biological habitat in the northeastern Gulf in areas potentially affected by oil and gas activities now or in the future," said Dr. Randall Davis, head of the Marine Biology department at Texas A & M University at Galveston. "Altimeter data like that from TOPEX/POSEIDON are the only information that enable on-site adjustments to the cruise plan to optimize the survey track, ultimately saving us time and money."

The TOPEX/POSEIDON satellite was developed to study global ocean circulation but it is providing unexpected benefits for marine biologists. "We are very excited that these data are being used in new and different ways. Scientists are continuing to find new applications for this project and are proving they can study not only ocean currents, but also the creatures that inhabit the oceans," said Dr. Lee-Lueng Fu, TOPEX/POSEIDON project scientist at the Jet Propulsion Laboratory, Pasadena, CA.

The TOPEX/POSEIDON satellite uses an altimeter to bounce radar signals off the ocean's surface to get precise measurements of the distance between the satellite and the sea surface. These data are combined with measurements from other instruments that pinpoint the satellite's exact location in space. Every ten days, scientists are able to produce a complete map of global ocean topography, the barely perceptible hills and valleys found on the sea surface. With detailed knowledge of ocean topography, scientist can then calculate the speed and direction of worldwide ocean currents.

The R/V Gyre expedition is sponsored by Texas A & M University, the Texas Institute of Oceanography and the National Biological Service.

TOPEX/POSEIDON is a joint mission of NASA and the French Space Agency, the Centre National d'Etudes Spatiales. The Jet Propulsion Laboratory manages the U.S. portion of the mission for NASA's Office of Mission to Planet Earth, Washington, DC. The Mission to Planet Earth is a long-term, coordinated research effort to study the Earth as a global environmental system.

-end-

News Release

National Aeronautics and
Space Administration

Washington, DC 20546
(202) 358-1600

David E. Steitz
Headquarters, Washington, DC
(Phone: 202/358-1730)

For Release
October 17, 1996

Jim Sahli
Goddard Space Flight Center, Greenbelt, MD
(Phone: 301/286-0697)

NOTE TO EDITORS: N96-65

SAC-B/HETE SCIENCE BRIEFING SET FOR OCT. 21

Scientists will brief news media about the upcoming Satelite de Aplicaciones Cientificas-B (SAC-B) and High Energy Transient Experiment (HETE) missions at 1 p.m EDT on Monday, Oct. 21. The briefing will originate from NASA's Goddard Space Flight Center Visitor Center, Greenbelt, MD. Scheduled to participate in the briefing will be:

- Dr. Brian Dennis, Principal Investigator, Goddard X-Ray Experiment, Goddard Space Flight Center
- Dr. Marcos Machado, Director of Science, CONAE
- Dr. Dave Burrows, Co-Investigator, Cosmic Unresolved X-Ray Background Instrument (CUBIC)
- Dr. George Ricker, HETE Principal Investigator, Massachusetts Institute of Technology

SAC-B is an international cooperative project between NASA and Argentina's National Commission of Space Activities (CONAE). The spacecraft is designed to advance the study of solar physics and astrophysics through the examination of solar flares, gamma ray bursts, diffuse cosmic X-ray background, and energetic neutral atoms. The spacecraft will be launched with a companion payload named High Energy Transient Experiment (HETE). HETE is a Massachusetts Institute of Technology built-spacecraft and will carry three instruments to study gamma-ray bursts.

Both spacecraft are scheduled to be launched from NASA's Wallops Flight Facility, Wallops Island, VA, on Tuesday, Oct. 29 at approximately 12:20 p.m. EST, using a Pegasus-XL launch vehicle. The Pegasus-XL, built by Orbital Sciences Corp., Dulles, VA, is a three-stage, solid-propellant booster system carried aloft a L-1011 aircraft.

The briefing will be broadcast on NASA Television which is available on Spacenet 2, Transponder 5, Channel 9, located at 69 degrees West longitude. News media will have two-way question and answer capability from participating NASA centers.

-end-

News Release

National Aeronautics and
Space Administration

Washington, DC 20546
(202) 358-1600

For Release

Don Savage
Headquarters, Washington, DC
(Phone: 202/358-1547)

October 17, 1996
EMBARGOED UNTIL: 4 P.M.(EDT)

Tammy Jones
Goddard Space Flight Center, Greenbelt, MD
(Phone: 301/286-5566)

Ray Villard
Space Telescope Science Institute, Baltimore, MD
(Phone: 410/338-4514)

RELEASE: 96-210

HUBBLE FOLLOWS RAPID CHANGES IN JUPITER'S AURORA

Hubble Space Telescope's sharp view of the rapid, spectacular dance of luminescent gasses high in Jupiter's atmosphere -- better known as aurora -- is allowing astronomers to map Jupiter's immense magnetic field and better understand how it generates such phenomena.

"Now that we have pinpointed the general location of the auroral curtains and have mapped their daily changes, eventually we should be able to find out what causes the aurora on Jupiter," said John T. Clarke, an astronomer at the University of Michigan's College of Engineering.

The new Hubble observations simultaneously show warped oval rings at the north and south poles (offset from Jupiter's spin axis by 10-15 degrees), as well as an auroral "footprint" created by a river of electrical current of about one million amperes flowing between Jupiter and the volcanic moon Io.

The Hubble images provide enough detail to allow Clarke and his colleagues to record daily changes in the auroras' intensity and motion. They find that changes in brightness occur over the course of a Jovian day, perhaps due to compression of Jupiter's magnetic field on the sun-facing side of the planet. They also find emission features that are fixed on the planet, co-rotating with it.

This global view is complemented by in situ measurements of the magnetic field and charged particles by the Galileo spacecraft, now orbiting Jupiter. By comparing close-up and global views scientists expect to refine theories about how Jupiter creates and maintains its electrical, incandescent light shows.

-more-

The team of scientists, at the University of Michigan, Ann Arbor, NASA's Jet Propulsion Laboratory, Pasadena, CA, University of Wisconsin, Madison, and other institutions, studied Jupiter's auroras for two years with the telescope's Wide Field and Planetary Camera 2. Their results have led to two papers, one first authored by Clarke and the other by Gilda Ballester, also of the University of Michigan's College of Engineering. Both papers appear in the October 18 issue of Science. The images, taken in ultraviolet light, are the most sensitive and sharply-detailed views of the auroras to date. Previous observations of Jupiter's aurora have been recorded by Hubble's Faint Object Camera and by ground-based telescopes using near-infrared filters. Hubble sees features as small as 186 miles across (300 kilometers). This allows Clarke and his colleagues to watch small-scale, rapid changes in the auroral pattern, map changes in both magnetic poles, and pinpoint the effects of emissions from Io.

Auroras occur when charged particles (electrons, protons, and positive ions) are captured in the magnetic field surrounding a planet. Falling toward the magnetic north and south poles, they collide with molecules and atoms in a planet's upper atmosphere. The atoms become energized and release the extra energy in the form of light, just as gas in florescent and neon lights glows when an electric current is applied.

By studying images of Jupiter's entire disk, the investigators found, surprisingly, the auroras mirror each other at the north and south poles. Though Earth's auroras at each pole also are carbon copies of each other, previous spatially-unresolved observations and theories for Jupiter suggested that some locations on the auroral ovals should be brighter. That's because, in Jupiter's case, the magnetic field has large asymmetries and more charged particles trapped in the field could, under specific mechanisms, eventually fall into the atmosphere at the weaker locations, and would thus create a brighter light show.

A critical difference is that auroras on Earth are triggered by a barrage of charged particles from the Sun. This process is different on Jupiter, although not well understood. Fundamentally, the planet's immense magnetic field, coupled with its fast, 10-hour rotation, helps generate auroras that are 1,000 times more powerful than Earth's spectacular light shows.

The situation is complicated by material released by Jupiter's moon, Io. Scientists believe that volcanic eruptions on Io churn out particles that become ionized, expand radially, and are trapped by Jupiter's immense magnetic field. These charges are forced to co-rotate with the planet, creating an immense sheet of current that in turn modifies Jupiter's magnetic field. What has not been clear on Jupiter is the balance of the internal processes versus the Sun-driven processes, and how these processes produce the auroral lights.

On Earth, magnetic storms are triggered by large changes in the solar particles, producing very bright auroras. These storms can disrupt radio signals and communications systems, interfere with airplane navigation and cause power outages. One storm in 1989 knocked out a Quebec power station serving 9 million people. The team has found that energetic auroral storms also occur on Jupiter, but that these storms may be triggered instead by internal processes.

Some of the material released by Io produces a fierce current of charged particles. The particles become ionized and are then drawn into Jupiter's intense magnetic field along an invisible "flux tube," which bridges both worlds. This creates small auroral spots just outside the ovals around both magnetic poles. By studying changes in the intensity of these spots, Clarke and his colleagues were able to map Jupiter's magnetic field as Io orbits through it. The scientists linked the spots to Io's "flux tube" because the auroral emissions rotate with Jupiter while the spots remain in a fixed location underneath Io.

"The size of the aurora at the magnetic footprint of Io is 600 to 1,200 miles (1,000 to 2,000 kilometers) across," Clarke said. "If you were at Jupiter's cloud tops, under Io's footprint, the aurora would fill the entire sky. You would see an explosion as the gasses 250 miles above you rapidly heated to more than 10,000 degrees Fahrenheit. The aurora would speed overhead from east to west at more than 10,000 miles per hour (5 kilometers per second) because Jupiter's fast rotation moves it rapidly underneath Io, which orbits more slowly."

Clarke and his colleagues hope that future observations will yield more information about the auroras. The team is sharing data with the scientists operating the Galileo spacecraft, which moves through Jupiter's magnetic field repeatedly as it orbits the giant planet and surveys the Galilean satellites. Galileo can record the type of charged particles (ions, protons, electrons) in the field, their location and energy. Information from Hubble and Galileo is important because scientists can create a more accurate picture of the charged particles which produce the auroral lights, which eventually could lead them to its source on Io.

The Space Telescope Science Institute is operated by the Association of Universities for Research in Astronomy, Inc., for NASA, under contract with the Goddard Space Flight Center, Greenbelt, MD. The Hubble Space Telescope is a project of international cooperation between NASA and the European Space Agency.

- end -

EDITOR'S NOTE: An image accompanying this release is available to news media by calling the Headquarters Imaging Branch on 202/358-1900. Photo numbers are:
Color: 96-HC-679
B&W: 96-H-679

Image files in GIF and JPEG format and captions may be accessed on Internet via anonymous ftp from ftp.stsci.edu in /pubinfo.

		GIF	JPEG
PRC96-32	Jupiter Aurora	gif/jupaur.gif	jpeg/jupaur.jpg

Higher resolution digital versions (300 dpi JPEG) of the release photograph will be available temporarily in /pubinfo/hrtemp: 96-32.jpg (color) and 96-32bw.jpg (black/white).

GIF and JPEG images, captions and press release text are available via World Wide Web at: http://www.stsci.edu/pubinfo/PR/96/32.html and via links at:
http://www.stsci.edu/pubinfo/Latest.html or
http://www.stsci.edu/pubinfo/Pictures.html.

News Release

National Aeronautics and
Space Administration

Washington, DC 20546
(202) 358-1600

For Release

October 17, 1996

Don Nolan-Proxmire
Headquarters, Washington, DC
(Phone: 202/358-1983)

Michael Mewhinney
Ames Research Center, Mountain View, CA
(Phone: 415/604-3937)

RELEASE: 96-211

NASA TECHNOLOGY TO HELP PILOTS TAXI MORE EFFICIENTLY

Faced with a projected 32 percent increase in air traffic in the United States over the next decade, NASA and the Federal Aviation Administration (FAA) are developing advanced technologies to increase traffic-handling capacity at existing airports.

One of those technologies is called the Taxiway Navigation And Situation Awareness (T-NASA) system that will help pilots taxi safely -- particularly in low visibility weather conditions. The integrated system was developed as part of NASA's $100 million Terminal Area Productivity (TAP) program and is being tested at NASA's Ames Research Center, Mountain View, CA.

"For the pilot, taxiing at an airport today is done in the same basic manner as it was in the 1950's -- receiving a verbal route clearance, and then following the airport signs," said Ames scientist Dr. David Foyle, technical leader of the T-NASA research development team. "Despite the technological boom in avionics, GPS satellite positioning technology and advanced display media, the only cockpit aid currently available to the taxiing pilot is a paper airport layout chart," Foyle said.

"T-NASA's goal is to safely get the aircraft from the gate to the runway and from the runway to the gate as rapidly and efficiently as we can," explains Dr. Robert McCann, who along with Foyle, Dr. Anthony Andre, Dr. Durand Begault and Dr. Elizabeth Wenzel, has been developing and testing T-NASA since 1993.

T-NASA is a combination of software and navigational devices designed to operate on the aircraft's flight deck. Unlike some of the other air traffic management tools now being tested by NASA and the FAA, T-NASA is not automated, so pilots will continue to manually control taxi maneuvers.

"There are other efforts to improve airport landing efficiency in low-visibility conditions due to bad weather, but without new displays and procedures for taxi, we feel that taxi operations may produce an airport traffic bottleneck," Foyle said. "Airport taxiing is extremely difficult in low-visibility weather conditions at unfamiliar airports, and at large, complex airports."

-more-

"T-NASA is a cockpit display system with three components," Foyle said. "The cleared taxi route is shown on a glass visor in front of the cockpit windshield, a Heads-Up Display (HUD), in a virtual reality manner. The pilot's aircraft position and that of other aircraft is shown on an electronic moving map of the airport on the instrument panel. Traffic warnings are produced via virtual 3-D audio techniques in which the warning sounds like it emanates from the direction of the traffic," Foyle said.

"By using GPS satellite positioning and an airport layout database, T-NASA updates the displays in real time," McCann said. "The HUD depicts the edges of the taxiway with a series of virtual `cones'. In addition, when there's a turn, we have virtual turn signs showing the angle and direction of the turn. As the pilot taxis, these virtual cones and signs move and change as if they were actual objects on the taxiway. The pilot's cleared route ends up looking like a virtual highway on the ground," McCann said.

"As the amount of traffic in the air increases, airline schedules become tighter and more intertwined," McCann said. "If there is bad weather at a major airport, there are tremendous disruptions on the schedules as backups occur. If we can increase the efficiency of airline surface operations so that planes are able to get very efficiently from the runway to the gate and from the gate to the runway, then we can impact the airline schedules and reduce delays. I think that's the bottom line for the taxpaying public."

Foyle predicted the new technology will lead not only to greater efficiency of operations, but to increased safety as well.

"Psychologists have shown that navigating with paper maps is a very difficult and demanding mental task," Foyle noted. "Our technology makes taxiing much easier for the pilot, particular under low visibility conditions. The HUD and the moving map shows the cleared taxi route to the pilot, and decreases the chance that the pilot goes off route and becomes a hazard to other aircraft. The moving map and virtual 3-D audio warnings provide pilots with better knowledge of where other aircraft traffic are on the airport surface," he said.

"The T-NASA system has strong potential for automobiles as well," McCann said. "For example, if we could adapt a T-NASA system for automobiles, we might be able to prevent accidents involving drivers going off the road during heavy fog, rain or snowstorms."

Foyle and McCann will discuss the T-NASA project Oct. 23 during the 1996 World Aviation Congress and Exposition being held Oct. 22-24 at the Sheraton Gateway Hotel in Los Angeles.

Next summer, Ames and NASA's Langley Research Center, Hampton, VA, are scheduled to conduct a flight demonstration of some of the TAP components, including the T-NASA navigation system, at Atlanta's Hartsfield International Airport. Ames also plans a full mission simulation of T-NASA next year in its Crew Vehicle Systems Research Facility.

-end-

VideoAdvisory

National Aeronautics and
Space Administration

Washington, D.C. 20546
(202) 358-1600

For Release

Deanna Corridon
Headquarters, Washington, DC
(Phone: 202/358-1733)

October 18, 1996

VIDEO ADVISORY: V96-127

LATEST GALILEO IMAGES, AXAF MIRROR ASSEMBLY COMPLETION & FIREFIGHTING BACKPACKS

On Friday the NASA TV Video File will feature the latest images of Jupiter's moons, Europa and Io, taken by NASA's Galileo spacecraft. NTV also will televise footage of the completition of the high resolution mirror asembly for NASA's Advanced X-ray Astrophysics Facility (AXAF). NASA Television also will include footage of the "next generation" air supply backpack for firefighters and rescue workers which can provide them with twice as much air than previous packpacks allowed. Replaying on NTV will be scientists at NASA's Ames Research Center, Mountain View, CA, testing a new integrated system of navigation aids that will help pilots taxi safely in low visibility, as well as Jupiter movies taken by NASA's Hubble Space Telescope showing visible light rotation and changes in Jupiter's auroras.

ITEM #1: LATEST GALILEO IMAGES
Latest images of Io and Europa taken by Galileo. *For more information contact Doug Isbell at (202) 358-1753.*

ITEM #2: MIRROR IMAGE
Footage of the completion of the high resolution mirrors for the AXAF observatory. *For more information contact Don Savage at (202) 358-1547 or Greg Shell at (205) 544-0034.*

ITEM #3: NEXT-GENERATION BACKPACK
Footage of the "next-generation" of air supply backpack for firefighters.

ITEM #4: INTERVIEW - BOB MARTIN, KSC LIFE SUPPORT MANAGER
Discusses the advantage of the liquid air pack. *For more information contact Joel Wells at (407) 867-2468.*

ITEM #5: REPLAY - AIRPORT TAXI

ITEM #6: REPLAY - INTERVIEW - DR. ROBERT MCCANN, SENIOR RESEARCH ASSOCIATE

ITEM #7: REPLAY - INTERVIEW - DR. DAVID FOYLE, RESEARCH PSYCHOLOGIST

ITEM #8: REPLAY - JUPITER AURORA MOVIE

Video news files air daily at noon, 3, 6, 9 p.m. and midnight EDT.

NASA Television is broadcast on Spacenet 2, transponder 5, channel 9, C-Band, located at 69 degrees West longitude, with horizontal polarization. Frequency is on 3880.0 megahertz, with audio on 6.8 megahertz.

- end -

News Release

National Aeronautics and
Space Administration

Washington, DC 20546
(202) 358-1600

For Release

October 18, 1996

Don Savage
Headquarters, Washington, DC
(Phone: 202/358-1547)

Greg Shell
Marshall Space Flight Center, Huntsville, AL
(Phone: 205/544-0034)

RELEASE: 96-212

COMPLETION OF MIRROR ASSEMBLY MARKS MILESTONE FOR NASA'S ADVANCED X-RAY ASTROPHYSICS FACILITY

The world's most powerful X-ray observatory came a major step closer to completion recently with the assembly of its high resolution mirrors.

The last of four pairs of unique mirrors which form the heart of NASA's Advanced X-ray Astrophysics Facility (AXAF) were aligned and cemented into place at Eastman Kodak's Federal Systems Division in Rochester, NY, last month.

"The extreme sensitivity of the mirrors made the installation a very delicate and painstaking process," said John Humphreys, Project Development Manager at NASA's Marshall Space Flight Center, Huntsville, AL. "Successful completion of the process represents a real achievement in the development of the telescope."

The high resolution mirror assembly is now being outfitted with additional hardware and a covering in preparation for testing and calibration in a special facility at Marshall, beginning in mid-November.

Unlike the concave, nearly flat mirrors used in optical telescopes, the AXAF mirrors are shallow, almost cylindrical cones. The four pairs of mirrors are nested inside each other. X-rays enter the telescope, graze off the mirrors -- much like a stone skipping across the surface of a pond -- and are focused onto a plane 30 feet behind the front of the mirrors.

The largest of the mirrors is 47.2 inches, which makes this mirror set the largest ever made. The size and accuracy of the mirrors will make AXAF 100 time more sensitive than previous X-ray telescopes, producing images 10 times sharper.

The observatory is scheduled for a Space Shuttle launch in 1998. In orbit, it will obtain never-before-seen images of highly energized X-ray sources -- such as neutron stars, black holes, debris from exploding stars, quasars, centers of galaxies and galaxy clusters.

- more -

AXAF will rank among NASA's great observatories, along with the Hubble Telescope and the Compton Gamma Ray Observatory. It will explore some of the most intriguing mysteries in space and offer a better understanding and knowledge of the universe.

Marshall manages development of the observatory for the Office of Space Science, NASA Headquarters, Washington, DC. TRW Space and Electronics Group, Redondo Beach, CA, is the prime contractor for the program. Ball Aerospace Division, Boulder, CO, provided hardware subsystems, and the AXAF mirrors were built and assembled by Hughes Danbury Optical Systems, Optical Coating Laboratory, Inc., Danbury, CT, and Eastman-Kodak Company, Rochester, N.Y.

- end -

EDITOR'S NOTE: An image to accompany this release is available to news media representatives by calling the Headquarters Imaging Branch at 202/358-1900.
Photo numbers are:

Color:	96-HC-680
B&W:	96-H-680

News Release

National Aeronautics and
Space Administration
Washington, DC 20546
(202) 358-1600

David E. Steitz
Headquarters, Washington, DC
(Phone: 202/358-1730)

Jim Sahli
Goddard Space Flight Center, Greenbelt, MD
(Phone: 301/286-0697)

For Release
October 21, 1996

RELEASE: 96-213

TWO SPACE SCIENCE SPACECRAFT SET FOR LAUNCH FROM WALLOPS

NASA is scheduled to place two new space science spacecraft into orbit aboard a expendable launch vehicle this month from NASA's Wallops Flight Facility, Wallops Island, VA.

SAC-B (Scientific Applications Satellite-B) is an international cooperative project between NASA and Argentina's National Commission of Space Activities (CONAE). The spacecraft is designed to advance the study of solar physics and astrophysics through the examination of solar flares, gamma-ray bursts, diffuse X-ray cosmic background, and energetic neutral atoms. Goddard's International Projects Office is managing SAC-B.

The SAC-B spacecraft will be launched with a companion payload named High Energy Transient Experiment (HETE). The HETE mission is led by the Massachusetts Institute of Technology under a contract with the Goddard International Projects Office.

"A primary goal of the SAC-B program is to develop and test scientific technology on a new, light, capable spacecraft designed and developed in Argentina. Follow-on spacecraft will form a series of light spacecraft for space applications, scientific investigations, and technology development," said Dr. Mario Acuna, project scientist for SAC-B in Goddard's International Projects Office.

SAC-B and HETE will be launched from Wallops Flight Facility using a winged Pegasus-XL launch vehicle. The Pegasus-XL, built by Orbital Sciences Corp., Dulles, VA, is a three-stage, solid-propellant booster system carried aloft L-1011 jet aircraft and released from the aircraft at an altitude of about 40,000 feet and an airspeed of Mach 0.8, 100 miles east of Walllops.

-more-

For the SAC-B mission, NASA is providing two scientific instruments, launch services on the Pegasus launch vehicle, and support for initial orbit operations and emergency backup throughout the mission life. CONAE is responsible for the design and construction of the SAC-B spacecraft, the Hard X-ray Spectrometer (HXRS) instrument, the ground station and the scientific data distribution.

Under a separate agreement between Argentina and Italy, the Italian Space Agency (ASI) provided the solar arrays plus a scientific instrument named ISENA that will measure energetic neutral atoms. Under an additional agreement between Argentina and Brazil, the Brazilian National Space Research Institute is providing the facilities required to perform environmental testing of the spacecraft.

SAC-B, weighing 400 pounds (181 kilograms), will be operated by CONAE from their San Miguel Mission Operation Control Center located just outside of Buenos Aires, Argentina. An Argentine flight operations team will be responsible for the spacecraft and instruments, as well as tracking, data acquisition and science data management. Wallops and NASA's Bermuda Island tracking station will provide complete powered flight ascent coverage.

NASA's Wallops Tracking Station will provide launch support command and engineering telemetry support augmented by the NASA Deep Space Network which will provide one contact per orbit for up to 30 days after launch. With a 342-mile circular, 38-degree inclination orbit, the planned lifetime for the SAC-B mission is three years.

SAC-B will carry three astrophysical instruments. The Argentine-built HXRS instrument which was developed by the Institute of Astronomy and Space Physics, will study changes in the spectra of gamma-ray bursts and solar X-ray flares.

Goddard will provide one instrument called the Goddard X-Ray Experiment (GXRE) that has twenty-two detectors of soft X-rays and gamma ray bursts emitted by solar flares and gamma ray bursts. A diffuse X-ray background detector, the Cosmic Unresolved X-ray Background Instrument (CUBIC), is being provided by Penn State University. It will map the X-ray sky in order to study the background radiation emanating from the galaxy and the universe.

HETE, a 275 pound spacecraft, will carry three instruments; a gamma-ray burst detector; an X-ray camera viewing the sky through a coded aperture; and ultraviolet (UV) cameras, which together allow investigators to detect a gamma-ray burst, use the associated X-ray emission to obtain a general location in the sky, and examine the output of the UV cameras to search for faint, associated UV emissions that can be located with great precision (within a few arc-seconds). Some of this information will be continuously transmitted in real time for numerous ground observatories to participate in rapid co-investigations of observed targets.

The HETE spacecraft also will be placed in a 342-mile (550 kilometer), 38-degree inclination orbit. The planned lifetime for the mission is six months. HETE has its own ground data collection system consisting of three primary and secondary receiving stations, and therefore does not require NASA communications, tracking or ground systems support.

Information on the SAC-B and HETE instruments can be obtained via the Internet World Wide Web at the following URLs:

CUBIC (SAC-B):	http://www.astro.psu.edu/xray/cubic
HETE (MIT):	http://space.mit.edu/HETE/
SAC-B (CONAE-Argentina):	http://www.conae.gov.ar/

-end-

NASA press releases and other information are available automatically by sending an Internet electronic mail message to domo@hq.nasa.gov. In the body of the message (not the subject line) users should type the words "subscribe press-release" (no quotes). The system will reply with a confirmation via E-mail of each subscription. A second automatic message will include additional information on the service. NASA releases also are available via CompuServe using the command GO NASA.

News Release

National Aeronautics and
Space Administration
Washington, DC 20546
(202) 358-1600

Ed Campion
Headquarters, Washington, DC
(Phone: 202/358-1778)

Rob Navias
Johnson Space Center, Houston, TX
(Phone: 713/483-5111)

For Release
October 22, 1996

NOTE TO EDITORS: N96-68

MIR 22 CREW NEWS CONFERENCE SET

U.S. astronaut John Blaha and his Russian crew mates, Commander Valery Korzun and Flight Engineer Alexander Kaleri, will hold a news conference from the Russian space station Mir on Thursday, October 24, at approximately 10 a.m. EDT. The news conference, which will last approximately 30 minutes, will be broadcast on NASA Television with two-way question and answer capability for reporters at participating NASA centers. Translation will be provided.

Blaha became a Mir crew member on September 19, three days after launching with the STS-79 astronauts on the Space Shuttle Atlantis. Blaha traded places with astronaut Shannon Lucid, who returned to Earth last month after a U.S.-record 188 days in orbit. Blaha is scheduled to remain on the Mir until mid-January, when he will be replaced by astronaut Jerry Linenger after Atlantis carries the STS-81 astronauts to the fifth Shuttle docking with Mir. Blaha will return to Earth with the STS-81 crew.

Dr. Lucid will hold her own news conference later in the day on October 24, from the Johnson Space Center, Houston, TX, at 1:30 p.m. EDT. It also will be carried on NASA TV with question and answer capability from participating centers.

NASA Television is carried on Spacenet 2, Transponder 5, Channel 9 at 69 degrees West longitude, horizontal polarization, frequency 3880 Mhz, audio 6.8 Mhz.

-end-

News Release

National Aeronautics and
Space Administration
Washington, DC 20546
(202) 358-1600

For Release

October 22, 1996

Jim Cast
Headquarters, Washington, DC
(Phone: 202/358-1779)

George DeFeis
Technology Utilization Foundation, New York, NY
(Phone: 212/490-3999)

NOTE TO EDITORS: N96-70

GOLDIN TO KEYNOTE TECH 2006 IN ANAHEIM OCTOBER 29

NASA Administrator Daniel S. Goldin will give the keynote address at NASA's seventh annual technology transfer conference and exposition, called Tech 2006.

Goldin's address will take place at approximately 1:45 p.m. PDT on October 29 at the Anaheim Marriott Hotel, Anaheim, CA. All other activities -- three days of exhibits, workshops and symposia, will be held at the Anaheim Convention Center.

Sponsored by NASA, NASA Tech Briefs and the Technology Utilization Foundation, the three days of exhibits, workshops and symposia will introduce a wealth of ready-made innovations and new opportunities for industry in such critical areas as electronics, computing, manufacturing and telemedicine.

This year, Technology 2006 will team with two concurrent conferences at the Anaheim Convention Center -- TeleCon XVI and Telemed II--to present a NASA-sponsored workshop showcasing breakthroughs in technologies for the telemedicine and distance learning industries.

Last year, at Technology 2005 in Chicago, attendees came from all 50 states and over half obtained licensing, cooperative research and development or other technology transfer agreements as a result of their attendance.

A new CD-ROM, "NASA Solutions--Sharing Aerospace Technology with America," will make its debut at Technology 2006. This CD-ROM, intended to serve as another venue for the private sector to gain access to NASA technologies quickly and easily, will be available to the press and contains information derived from NASA's Technology Tracking System, the "TechTracS" database, available over the Internet through NASA's Commercial Technology Home Page at:

http://nctn.hq.nasa.gov

-end-

News Release

National Aeronautics and
Space Administration
Washington, DC 20546
(202) 358-1600

For Release

October 22, 1996

Michael Braukus
Headquarters, Washington, DC
(Phone: 202/358-1979)

Ron Gilmore
Baylor College of Medicine, Houston, TX
(Phone: 713/798-4712)

RELEASE: 96-214

TELEMEDICINE SERIES UNITES U.S. AND RUSSIAN MEDICAL SCHOOLS

The first in a series of NASA-sponsored telemedicine education conferences began today at 9 a.m. EDT, with a linkup between Baylor College of Medicine in Houston and Moscow State University.

Dr. Arnauld Nicogossian, Associate Administrator for Life and Microgravity Sciences and Applications at NASA Headquarters, said, "It is NASA's hope that this telemedicine program will provide a valuable and ongoing series of international medical education presentations between Russian and American medical schools. This is an important activity. It brings our two communities together and will help us promote joint research in space biology and medicine, both on the ground and in orbit aboard the International Space Station."

NASA began its telemedicine experience with the former Soviet Union in 1989 when it created the Spacebridge to Armenia and Ufa. NASA used its telecommunications and telemedicine capabilities to help provide humanitarian assistance to the victims of the Armenian earthquake and the Ufa natural gas explosion.

Nicogossian said, "In the years following Spacebridge, we came to recognize the value of the Internet for its global communications capabilities while maintaining and working with the telemedicine infrastructure we had created. One of the greatest potential dividends of the telemedicine program is the great strides we expect to see in medical education both in the United States and abroad."

The topic of today's program, "Recent Advancements in the Management of Heart Disease," included presentations on aneurysm surgery, coronary angioplasty, new cholesterol reducing drugs, cryopreservation of organs and molecular genetics of cardiovascular disease.

-end-

News Release

National Aeronautics and
Space Administration
Washington, DC 20546
(202) 358-1600

For Release

Ed Campion
Headquarters, Washington, DC
(Phone: 202/358-1780)

October 22, 1996

Lisa Malone
Kennedy Space Center, FL
(Phone: 407/867-2468)

RELEASE: 96-215

KSC DIRECTOR JAY HONEYCUTT TO RETIRE

Jay F. Honeycutt, Director of NASA's Kennedy Space Center (KSC), FL, has announced his plans to retire from NASA in early 1997. NASA is proceeding with the search for a successor.

Honeycutt's career has spanned almost the entire history of the U.S. human space flight program, beginning at the Redstone Arsenal in Huntsville, AL, in 1960. He has been the Director of KSC since January 1995.

"When I first came to this position in 1995, I committed to staying on for two years and then reassessing my plans," Honeycutt said. "Those two years are up and it's time to think about what I want to do next. I have no specific time frame in mind but will leave when the time is right and a successor is on hand."

"Jay Honeycutt has played an important role in NASA achievements for three decades," NASA Administrator Daniel S. Goldin said. "He has pursued excellence in every project with which he has been associated. This was recognized by the White House, which honored KSC with quality awards during the past two years. He will be greatly missed."

Honeycutt is the sixth KSC Center Director. In announcing his plans to leave NASA, Honeycutt said, "This was a very difficult decision. I am very proud to have been a part of the tremendous achievements of the Agency and the contribution it has made to a better quality of life for all Americans."

-more-

Honeycutt began his government career as an engineer at Redstone Arsenal in Huntsville before joining NASA in 1966 as an engineer in flight operations at the Johnson Space Center in Houston. During the Apollo program he headed the group that trained astronaut crews for the lunar landings. Following the Apollo program he continued to progress in management responsibility, moving to NASA Headquarters in 1981 as technical assistant to the Associate Administrator for Space Flight. Honeycutt served as deputy manager of the National Space Transportation System Program Office at Headquarters from 1987 to 1989.

In March 1989, Honeycutt moved to KSC as director of Shuttle Management and Operations, the post he held when appointed Center Director in 1995.

His many awards include two Exceptional Service Medals, the Special Achievement Award, NASA's Outstanding Leadership Medal, the NASA Equal Employment Opportunity Award and the Meritorious Executive Presidential Rank Award. Honeycutt and his wife Peggy live in Cocoa Beach and have four children.

-end-

News Release

National Aeronautics and
Space Administration
Washington, DC 20546
(202) 358-1600

For Release

Ed Campion
Headquarters, Washington, DC
(Phone: 202/358-1778)

October 23, 1996

Rob Navias
Johnson Space Center, Houston, TX
(Phone: 713/483-5111)

NOTE TO EDITORS: N96-69

BRIEFINGS SET FOR ORFEUS-SPAS, WAKE SHIELD MISSION

A series of briefings on the STS-80 mission will be held on Thursday, Oct. 31, at the Johnson Space Center (JSC), Houston, TX, the Kennedy Space Center (KSC), FL, and the Goddard Space Flight Center (GSFC), Greenbelt, MD. All the briefings will be broadcast on NASA Television.

The seventh and final Shuttle flight of the year is scheduled to be launched in early November aboard Columbia with five astronauts aboard to deploy and retrieve a pair of science satellites -- the ORFEUS-SPAS astronomy satellite, and the Wake Shield Facility, making its third flight to grow thin film semiconductor material in a nearly perfect vacuum in orbit.

In addition, astronauts Tammy Jernigan and Tom Jones will conduct a pair of spacewalks during the planned 16-day mission designed to fine-tune techniques which will be used in the assembly of the International Space Station beginning in December 1997.

The briefings will begin at 9 a.m. EST at JSC with an overview of the mission by STS-80 Lead Flight Director Al Pennington, followed at 10 a.m. EST with the ORFEUS-SPAS briefing from KSC. At 11 a.m. EST the briefings return to JSC for an overview on the Wake Shield Facility. The briefings will resume at 1 p.m. EST with a briefing from JSC on the two spacewalks which will be performed during the flight, followed at 2:30 p.m. EST by the STS-80 crew news conference. At 4 p.m. EST a briefing will be conducted at JSC on the National Institutes of Health-R experiment. The briefings will conclude at 4:30 p.m. EST with a briefing on the Space Experiment Module from Goddard.

-more-

Individual round-robin interviews with the STS-80 astronauts will be held after the crew news conference for reporters attending the briefings at JSC and those who make special arrangements to conduct interviews by phone. Reporters interested in round-robin interviews with the STS-80 astronauts should contact Eileen Hawley at 713/483-5111 by close of business on October 28. The interviews will not be seen on NASA TV.

The STS-80 briefings can be seen on NASA Television, which is carried on Spacenet 2, Transponder 5, Channel 9 at 69 degrees West longitude, horizontal polarization, frequency 3880 Mhz, audio 6.8 Mhz.

STS-80 Briefings (all times are EST)

9 a.m.	Mission Overview (JSC) Al Pennington, STS-80 Lead Flight Director
10 a.m.	ORFEUS-SPAS Overview (KSC) Konrad Moritz, ORFEUS-SPAS Project Manager Ron Polidan, ORFEUS-SPAS Project Scientist
11 a.m.	Wake Shield Facility Overview (JSC) Ed Gabris, Director, Space Development and Commercial Research Division, NASA Headquarters Dr. Alex Ignatiev, Director, Space Vacuum and Epitaxy Center, University of Houston
1:00 p.m.	EVA Overview (JSC) Daryl Schuck, STS-80 Lead EVA Officer Tim Brady, EVA Development Test Flight Hardware Manager
2:30 p.m.	STS-80 Crew News Conference (JSC) Ken Cockrell, Commander Kent Rominger, Pilot Tammy Jernigan, Mission Specialist 1 Tom Jones, Mission Specialist 2 Story Musgrave, Mission Specialist 3
4:00 p.m.	NIH-R Experiment Overview (JSC) David McCarron, Principal Investigator, Oregon Health Sciences University, Portland
4:30 p.m.	Space Experiment Module Overview (GSFC) Ruthan Lewis, SEM Mission Manager

-end-

News Release

National Aeronautics and
Space Administration

Washington, DC 20546
(202) 358-1600

Don Savage
Headquarters, Washington, DC
(Phone: 202/358-1547)

For Release
October 23, 1996

Tammy Jones
Goddard Space Flight Center, Greenbelt, MD
(Phone: 301/286-5566)

Ray Villard
Space Telescope Science Institute, Baltimore, MD
(Phone: 410/338-4514)

Terry Devitt
University of Wisconsin-Madison
(Phone: 608/262-8282)

NOTE TO EDITORS: N96-71

HUBBLE MAKES MOVIE OF NEPTUNE'S ROTATION AND WEATHER

NASA's Hubble Space Telescope has been used to assemble a time-lapse color movie showing a full 16-hour rotation of the distant planet, Neptune. The movie, made from a series of Hubble observations over nine consecutive orbits, allows astronomers to track cloud motion on the planet. The clear images show Neptune's powerful equatorial jet stream, immense storms, and dark spot in Neptune's northern hemisphere, first identified last year by a Massachusetts Institute of Technology team using Hubble.

The movie was made by a team of scientists led by Lawrence Sromovsky of the University of Wisconsin-Madison's Space Science and Engineering Center and were presented at the annual meeting of the Division of Planetary Sciences of the American Astronomical Society, in Tuscon AZ. The team combined observations from Hubble and NASA's Infrared Telescope Facility (IRTF) on Mauna Kea, Hawaii, to observe the distant planet in a variety of wavelengths, each providing a different set of information about Neptune's clouds, their structure, and how they circulate. Scientists can make more precise calculations of Neptune's wind speeds and directions, yielding refined information about the planet's dynamic weather system.

In addition to the movie, a still image is available to news media representatives by calling the Headquarters Imaging Branch on 202/358-1900. Photo numbers are:
Color: 96-HC-692 B&W: 96-H-692

- more -

Image files in GIF and JPEG format and captions may be accessed on Internet via anonymous ftp from ftp.stsci.edu in /pubinfo.

		GIF	JPEG
PRC96-33	Neptune	gif/nept96.gif	jpeg/nept96.jpg

Higher resolution digital versions (300 dpi JPEG) of the release photograph are available in /pubinfo/hrtemp: 96-33.jpg (color) and 96-33bw.jpg (black/white).

GIF and JPEG images, captions and press release text are available via the World Wide Web at:
http://www.stsci.edu/pubinfo/PR/96/33.html and via links in:
http://www.stsci.edu/pubinfo/Latest.html or
http://www.stsci.edu/pubinfo/Pictures.html.

- end -

News Release

National Aeronautics and
Space Administration
Washington, DC 20546
(202) 358-1600

For Release

October 23, 1996

Douglas Isbell
Headquarters, Washington, DC
(Phone: 202/358-1753)

Mary Beth Murrill
Jet Propulsion Laboratory, Pasadena, CA
(Phone: 818/354-5011)

RELEASE: 96-216

HIGH-ALTITUDE IONOSPHERE FOUND AT IO BY GALILEO SPACECRAFT

Scientists participating in NASA's Galileo mission have discovered that the Galileo spacecraft may have flown though a dense, high-altitude ionosphere during its encounter with Jupiter's volcanic moon Io last December. This discovery suggests that Io's atmosphere is time variable and is made of volcanic gas lofted to very high altitudes.

An ionosphere is a region of electrically charged gas that exists at the top of some planetary atmospheres. The surprising discovery is being reported by Galileo scientists this week at a meeting of the American Astronomical Society's Division of Planetary Sciences held in Tucson, AZ, along with other Galileo results, including remarkable new images of the planet and its moons.

"Sensors on the spacecraft found a very dense region of ionized oxygen, sulfur and sulfur dioxide at 555 miles on Io that must be pumped into that region by Io's relentless volcanic activity," said Dr. Louis A. Frank of the University of Iowa, principal investigator on Galileo's plasma science experiment. "Instead of being swept away by Jupiter's rotating magnetosphere as anticipated, the ionized gases surprisingly remain with Io," he said.

"Passage of the Galileo spacecraft through an ionosphere was not expected because images of the volcanic plumes previously taken with the Voyager spacecraft indicated that the plume heights extended only to a few hundred kilometers or less," Frank said. A radio occultation by the Pioneer 10 spacecraft in 1973 indicated ionospheric heights only about 30 to 60 miles above the surface. "No one expected to see this at 900 kilometers' altitude," he added. The difference between what Pioneer saw and what Galileo has observed indicates that Io's atmosphere and ionosphere are variable and may grow and shrink with more or less volcanic activity.

-more-

The results may lend credence to previous theories proposed by Galileo project scientist Dr. Torrence Johnson of NASA's Jet Propulsion Laboratory (JPL), Pasadena, CA, that invisible "stealth plumes" deliver volcanic gases to great heights above Io. Io's weak gravity field apparently permits the invisible gases emanating from the volcanoes to reach extraordinary heights far beyond the lower altitudes achieved by the dust and other volcanic ejecta that reflect sunlight and can be seen in images, Frank said.

IO ELECTRON BEAMS

In a related finding, the energetic particle detector on the spacecraft measured intense, bi-directional electron beams that are aligned with Galileo's magnetic field in Io's vicinity. The beams are similar to those that impinge on Earth's atmosphere to produce aurora and also positive ions and electrons in Earth's atmosphere.

Dr. Donald J. Williams, principal investigator on the energetic particle experiment from the Johns Hopkins Applied Physics Laboratory, said the electron beams span the energy range of 15 kiloelectron volts to 190 kiloelectron volts and represent an energy deposition into Jupiter's atmosphere of up to one billion watts.

"This is sufficient energy input into the Jovian atmosphere to produce visible auroral emissions," Williams said. "These beams are a signature of remarkable particle acceleration processes that occur in the vicinity of Io - processes that are thought to be linked to Io's motion through Jupiter's plasma and magnetic field environment." Additional work is required to determine whether the beams play a role in producing some of the auroral emissions observed in Jupiter or if they are related to radio emissions that have been correlated with Io's orbital motion.

The electron beams also must have a role in maintaining the Io torus, the doughnut-shaped cloud of ionized gases that flows between Jupiter and Io, Galileo scientists said. Auroras in Io's atmosphere is one likely result of the electron beams, they reported, and the two-way electron highway that the beams produce between Jupiter and Io must contribute to some of the auroras observed in Jupiter's atmosphere as well.

IO VOLCANO SHIFTING?

Several images recently returned by Galileo show new details of surface features on the moons Ganymede and Io. One new image of the active volcano Prometheus on Io has been compared to one of the same feature taken by NASA's Voyager spacecraft 17 years ago, and shows that the plume is now erupting from a position about 46.5 miles west of where the hot spot resided in 1979. It is not known if the plume source is the same or if the plume is now emanating from a new source. Overall, scientists studying Galileo images of Io are observing that a wide variety of surface changes have occurred in the nearly two decades since a spacecraft last visited Jupiter's system.

FROSTED RIMS ON GANYMEDE

Bright white areas seen around the circular rims of high-latitude impact craters on Ganymede in new Galileo images of that moon are likely water-ice frosts, Galileo scientists report. Even though the Sun is shining from the south, the north-facing walls of the ridges and craters are brighter than the walls facing the Sun. Images of regions elsewhere on Ganymede show more details of the remarkable juxtaposition of newer and older fractured and faulted terrain that characterizes so much of this big moon's surface. A stereoscopic view of Ganymede has also been produced with two images of the Galileo Regio region (one was taken during the first Ganymede flyby in June and the second was acquired in the September flyby). The image, which was computer-reconstructed by imaging scientists at JPL, shows new topographic information about the moon.

Galileo science team members are reporting on numerous other new findings about Jupiter and its moons:

The photopolarimeter radiometer experiment produced heat maps of the Great Red Spot on Jupiter, the day side of the moon Europa, the night side of Io, and both the day and night sides of Ganymede during the spacecraft's flyby of Ganymede in June. The images of the Great Red Spot show temperatures of the atmosphere at the 250 and 500 millibar pressure levels, much like terrestrial weather maps. The Great Red Spot is colder than its surroundings, consistent with earlier Voyager and Earth-based observations in which the spot is modeled as an anticyclonic vortex with central up-welling balanced by subsidence at its edges.

The radiometer also produced temperature data for Io indicating a nighttime temperature about -375 to -380 Fahrenheit. The first midday temperature for Europa, -229 Fahrenheit has allowed the radiometer instrument team to determine that the moon has a more porous or "fluffy" ice surface than the other moons. Researchers said that such porosity indicates Europa's surface is covered with finely powdered ice grains.

The near-infrared mapping spectrometer instrument and Galileo's solid state imaging camera measured hot regions on Io including erupting volcanoes and individual volcanoes, finding temperatures between 296 to 656 degrees Fahrenheit.

On Callisto and Ganymede, the near-infrared mapping spectrometer found surface features indicating the presence of hydrated materials, or possibly carbon dioxide frost.

JPL manages the Galileo mission for NASA's Office of Space Science, Washington, DC.

The Galileo mission home page is on the World Wide Web at:

http://www.jpl.nasa.gov/galileo.

Images from the mission are also posted on NASA's Planetary Photojournal at:

http://photojournal.jpl.nasa.gov

A set of five images described in this news release is available to news media through a fax to the NASA imaging branch at 202/358-4333. Photo numbers are:

	Color	B&W
Io in front of Jupiter:	96-HC-693/	96-H-693
Changing volcanoes on Io:	96-HC-694/	96-H-694
Ice-frosted crater tops on Ganymede	96-HC-695/	96-H-695
Ganymede's Nippur Sulcus	96-HC-696/	96-H-696
Stereo view Galileo Regio/Ganymede	96-HC-697/	96-H-697

-end-

VideoAdvisory

National Aeronautics and
Space Administration

Washington, D.C. 20546
(202) 358-1600

For Release
October 24, 1996

Deanna Corridon
Headquarters, Washington, DC
(Phone: 202/358-1733)

VIDEO ADVISORY: V96-128

STS-79 HIGHLIGHTS, DR. SHANNON LUCID, JOHN BLAHA & INTERNATIONAL SPACE STATION ASSEMBLY ANIMATION

On Thursday the NASA TV Video File will feature IMAX footage of astronauts and cosmonauts onboard the Mir Space Station taken during the STS-79 mission, highlights from Dr. Shannon Lucid's mission on Mir including training and return on STS-79, highlights of John Blaha's current mission on Mir, and animation depicting the assembly sequence of the International Space Station. Replaying on NASA TV will be new images and animation of Jupiter's moons from the Galileo spacecraft's second fly-by of Ganymede. NTV also will replay a movie of Neptune's rotation in primary colors of red, blue, and green, created by images collected from NASA's Hubble Space Telescope.

ITEM #1: STS-79 IMAX FOOTAGE
Footage of astronauts and cosmonauts on Mir as well as images of the station in orbit.

ITEM #2: DR. SHANNON LUCID HIGHLIGHTS
Compilation b-roll of Shannon Lucid. *For more information contact Rob Navias at (713) 483-5111.*

ITEM #3: JOHN BLAHA HIGHLIGHTS
Highlights of Astronaut John Blaha's mission on Mir.

ITEM #4: SPACE STATION ASSEMBLY ANIMATION
Animation depicting the assembly of the International Space Station.

ITEMS #5-14: REPLAY - GALILEO'S SECOND FLY-BY OF GANYMEDE
Animation and the most recent photos from Jovian System.

ITEM #15: REPLAY - NEPTUNE IN PRIMARY COLOR

Video news files air daily at noon, 3, 6, 9 p.m. and midnight EDT.

NASA Television is broadcast on Spacenet 2, transponder 5, channel 9, C-Band, located at 69 degrees West longitude, with horizontal polarization. Frequency is on 3880.0 megahertz, with audio on 6.8 megahertz.

- end -

News Release

National Aeronautics and
Space Administration
Washington, DC 20546
(202) 358-1600

For Release

October 25, 1996

Douglas Isbell
Headquarters, Washington, DC
(Phone: 202/358-1753)

Allen Kenitzer
Goddard Space Flight Center, Greenbelt, MD
(Phone: 301/286-8955)

RELEASE: 96-217

1996 ANTARCTIC OZONE HOLE BELOW RECORD AVERAGE SIZE

Two NASA instruments again have detected substantial depletion of ozone levels over Antarctica, commonly referred to as the Antarctic ozone hole.

The average size of the Antarctic ozone hole during 1996 has been almost as large as in the peak year of 1993, although ozone values are higher than the record lows seen in September 1994, according to preliminary analysis of satellite data by scientists at NASA's Goddard Space Flight Center in Greenbelt, MD. During the current year, the ozone hole covered a surface area over the South Pole roughly equal in size to the North American continent.

These data were recorded by two of NASA's Total Ozone Mapping Spectrometer instruments (TOMS) launched this year, one on board the NASA Earth Probe satellite and another on the Japanese Advanced Earth-Observing Satellite (ADEOS) satellite. Low ozone amounts over the Antarctic continent consistent with these TOMS data also have been validated by ground-based instruments and other satellite-based instruments.

The average size of the ozone hole during this year was 8.3 million square miles, similar to observations in the last four years. The largest observed average size of the ozone hole was in 1993, at 8.5 million square miles.

The hole started to form in mid-August of this year and reached a one-day peak size on Sept. 7, 1996, of about 10 million square miles, then quickly shrunk to values of less than 8.5 million square miles. The previous largest one-day peak size hole was 9.4 million square-miles on Sept. 27, 1992. In comparison, the surface area of North America is 8.1 million square-miles while Antarctica has a surface area of 5.4 million square-miles.

Since the mid-1980s, the region covered by low total ozone begins to grow each year in early August. This region reaches its maximum extent in September, while the lowest ozone values are typically seen in late September and early October. The ozone hole usually disappears by early December. The ozone hole in 1996 opened up slightly earlier than in previous years, but had begun to decrease in surface area below 7.7 million square-miles by Oct. 16, 1996.

-more-

"This ozone hole is very similar to those seen in recent years," said Dr. Paul Newman, research scientist in the Laboratory for Atmospheres at Goddard. "Although its area climbed briefly over that of the previous peak, that is not as great a concern as the average size, because meteorological conditions can cause large day-to-day fluctuations. This is similar to winter temperatures, where one really cold day is not as important as the average temperature over the whole winter season."

The ozone amounts measured by TOMS/ADEOS and TOMS/Earth Probe dropped to 111 Dobson units on Oct. 5 near the center of the Antarctic continent, with values below 220 Dobson units measured over a wide area. Total ozone values less than 100 Dobson units were measured in both 1993 and 1994, with the record low value of 88 Dobson units measured on Sept. 28, 1994.

Ozone, a molecule made up of three atoms of oxygen, comprises a thin layer of the atmosphere which absorbs harmful ultraviolet radiation from the Sun. A Dobson unit is related to the physical thickness of the ozone layer if it were brought to the Earth's surface. The global average ozone layer thickness is 300 Dobson units, which equals 1/8th of an inch, approximately the thickness of two stacked pennies. In contrast, the ozone layer thickness in the ozone hole is about 100 Dobson units (1/25th of an inch), approximately the thickness of a single dime.

Scientists at the South Pole from the National Oceanic and Atmospheric Administration (NOAA), working with balloon-borne measurements, have found low total ozone values similar to those seen in 1995. "However, in the central region of the ozone hole, from 7.5 to 12.5 miles altitude, ozone depletion was more severe than in the past," said Dr. Dave Hofmann of the NOAA Climate Monitoring and Diagnostics Lab in Boulder, CO. The NOAA measurements showed that complete destruction of ozone at an altitude of 10 miles was observed over the period from Sept. 24 to Oct. 14. "Total ozone did not reach record lows because of unusually high ozone above the ozone hole at 15 miles which compensated for the low values in the ozone hole," Hofmann said.

"These deep and large ozone holes are likely to continue to form annually until the stratospheric chlorine amount drops to its pre-ozone hole values," said Dr. Richard Stolarski, also a research scientist at Goddard. "The slightly earlier ozone hole this year probably resulted from the continued increase of Antarctic stratospheric total chlorine levels."

Since the discovery of the ozone hole in 1985, TOMS has been a key instrument for monitoring ozone levels throughout the southern hemisphere. The first TOMS aboard NASA's Nimbus-7 satellite measured Antarctic ozone levels from November 1978 to May 1993, and it helped make ozone a household word through pictures of the Antarctic ozone hole. It was followed by a TOMS sensor on a Russian satellite.

TOMS data also provided part of the scientific underpinning for the Montreal Protocol, under which many of the world's nations have agreed to phase out the use of ozone-depleting chemicals. As a result of restrictions in the Montreal Protocol, chlorine levels have already peaked in the lower atmosphere, and should peak in the Antarctic stratosphere in about three to five years.

The size and depth of the ozone hole, and global ozone levels, depend on meteorological conditions and on the amount of chlorine present in the atmosphere, and may be affected by the presence of sulfate aerosols produced by volcanic eruptions. Scientists speculate that ozone values over Antarctica were low in 1993 and 1994 because of the enhanced presence of sulfuric acid aerosols in the stratosphere due to the June 1991 Mount Pinatubo eruption in the Philippines.

TOMS-Earth Probe, launched in July of this year, is the third in the series of TOMS instruments. Operating from a 312-mile orbit, TOMS-Earth Probe is principally dedicated to collecting ozone and aerosol data in the lower atmosphere. The fourth TOMS instrument was launched in August aboard ADEOS into a 500-mile orbit. ADEOS is an international climate change research mission that includes instruments from the U.S., Japan, and France, with investigators from many countries around the world.

Both TOMS-EP and ADEOS are key parts of a global environmental effort which includes NASA's Mission to Planet Earth, a long term, coordinated research effort to study the Earth as a global environmental system.

TOMS ozone data and pictures are available to anyone with a computer connection to the Internet World Wide Web at :

http://jwocky.gsfc.nasa.gov

The TOMS instruments are managed by the Goddard Space Flight Center for NASA's Office of Mission to Planet Earth, Washington, DC.

-end-

NASA press releases and other information are available automatically by sending an Internet electronic mail message to domo@hq.nasa.gov. In the body of the message (not the subject line) users should type the words "subscribe press-release" (no quotes). The system will reply with a confirmation via E-mail of each subscription. A second automatic message will include additional information on the service. NASA releases also are available via CompuServe using the command GO NASA.

VideoAdvisory

National Aeronautics and
Space Administration

Washington, D.C. 20546
(202) 358-1600

For Release
October 28, 1996

Deanna Corridon
Headquarters, Washington, DC
(Phone: 202/358-1733)

VIDEO ADVISORY: V96-130

FORECASTING EARTHQUAKES; SAC-B TO LAUNCH

On Monday the NASA TV Video File will feature footage of scientists beginning installation of a network of 250 Global Positioning System (GPS) receivers that will measure earthquake fault movement in California. The data will be gathered and analyzed mainly by students helping researchers to predict future earthquake hazards in southern California. NASA TV also will televise b-roll of the Satelite de Aplicaciones Cientificas (SAC-B), which is scheduled to be launched from a Pegasus XL vehicle on Tuesday, Oct. 29, 1996, at approximately 12:20 p.m. EST. SAC-B is an international cooperative project between NASA and Argentina's National Commission of Space Activities (CONAE) designed to examine solar flares, gamma ray bursts, and diffuse cosmic X-ray background and energetic neutral atoms. Replaying on NTV will be footage of how an experimental infrared camera helped a Los Angeles TV news crew see through smoke and pinpoint lingering hotspots of the fires plaguing Southern California.

ITEM #1: FORECASTING EARTHQUAKES
Animation of the GPS Satellite. *For more information contact Doug Isbell at (202) 358-1753 or Mary Hardin at (818) 354-5011.*

ITEM #2: GPS RECEIVERS
Footage of various sites where GPS receivers are used.

ITEM #3: INTERVIEW -- ANDREA DONELLAN, GEOPHYSICIST AT JPL

ITEM #4: SAC-B READIED FOR LAUNCH
B-roll of SAC-B. *For more information contact Jim Sahli at (301) 286-0697.*

ITEM #5: INTERVIEW -- JERRE HARTMAN, MANAGER, INT'L PROJECTS OFFICE

ITEM #6: INTERVIEW -- DR. MARIO ACUNA, SAC-B PROJECT SCIENTIST

ITEM #7: INTERVIEW -- DR. MARCO MACHADO, ARGENTINE SAC-B PROJECT SCIENTIST

ITEM #8: INTERVIEW -- DR. DAVE BURROWS, PENN STATE SAC-B SCIENTIST

ITEMS #9-11: REPLAY - SEEING THROUGH THE SMOKE

Video news files air daily at noon, 3, 6, 9 p.m. and midnight EDT.

NASA Television is broadcast on Spacenet 2, transponder 5, channel 9, C-Band, located at 69 degrees West longitude, with horizontal polarization. Frequency is on 3880.0 megahertz, with audio on 6.8 megahertz.

- end -

News Release

National Aeronautics and
Space Administration
Washington, DC 20546
(202) 358-1600

For Release

October 28, 1996

Douglas Isbell
Headquarters, Washington, DC
(Phone: 202/358-1753)

Mary Hardin
Jet Propulsion Laboratory, Pasadena, CA
(Phone: 818/354-5011)

Cheryl Dybas
National Science Foundation, Arlington, VA
(Phone: 703/306-1070)

Don Kelly
U.S. Geological Survey, Reston, VA
(Phone: 703/648-4466)

RELEASE: 96-218

NEW TECHNOLOGY TO HELP MEASUREMENT AND STUDY OF EARTHQUAKES

Scientists have begun installing a network of 250 Global Positioning System (GPS) receivers that will continuously measure the constant, yet physically imperceptible, movements of earthquake faults throughout southern California. This information, which in many cases will be gathered and analyzed with the help of local students, should help researchers forecast future earthquake hazards in the greater Los Angeles area.

NASA Administrator Daniel S. Goldin dedicated a new site in the Southern California Integrated GPS Network (SCIGN) today at Rialto High School, before a demonstration of the technology to science students from the school. Goldin was accompanied by U.S. Representative George Brown (D-CA), the ranking minority leader of the House Science Committee, and representatives from the National Science Foundation and the U.S. Geological Survey.

"This network is a tremendous example of how technology developed for space benefits life on Earth. This interagency project will give us detailed information never before available to track the invisible geologic strains and stresses that lie beneath the California landscape," Goldin said. "Such data should give us fresh insight into the forces that produce earthquakes, and could one day help reduce the loss of life and property from such disasters."

-more-

GPS uses data transmitted from a constellation of 24 Earth-orbiting satellites that are jointly governed by the departments of Defense and Transportation. The satellites are arranged so that several of them are "visible" from any point on the surface of the Earth at any time. A user on the ground using a GPS receiver can determine the site's precise location by coordinating the signals from the satellites.

"The surface of the Earth is constantly moving and southern California is being squeezed in the process. The GPS network will continuously measure movements of the Earth's crust with a precision of one millimeter per year, which will show us where strain is building up," said Dr. Andrea Donnellan, a member of the SCIGN coordinating committee at NASA's Jet Propulsion Laboratory (JPL), Pasadena, CA.

"GPS is the most important new technology to emerge for the study of earthquakes in decades. This information will permit us to improve our estimates of the regional earthquake hazard in southern California and to prioritize earthquake mitigation activities, including emergency preparedness and retrofit strategies," said Dr. Tom Henyey, director of the USGS-NSF Southern California Earthquake Center (SCEC) in Los Angeles. "Continuous GPS measurements also will allow for more rapid regional damage assessment following large earthquakes."

The earthquake network began in 1990 with only four GPS receivers as a prototype project funded by NASA. It detected very small motions of the Earth's crust in southern California associated with the June 1992 Landers and the January 1994 Northridge earthquakes. "The GPS receivers operating during the Landers earthquake were able to detect for the first time a subtle change in the regional deformation pattern, which is potentially of great importance for studying the physics of earthquakes and hazards mitigation" said Dr. Yehuda Bock, a SCIGN executive board member from Scripps Institution of Oceanography, University of California, San Diego.

Currently, the SCIGN has 40 GPS receivers up and running, with the remaining receivers scheduled to be installed over the next three years.

"With data from the 40 receivers, we have determined that southern California has continued to move since the Northridge quake in 1994. This may mean that stress is being relieved in part without earthquakes, which may reduce the overall earthquake hazard," JPL's Donnellan said. "We will try to determine if other faults have been loaded as a result of the earthquake."

"The survey data are particularly important for identifying active buried faults that do not reach the ground surface. Such faults may be common in the Los Angeles metropolitan region," said Dr. David Jackson, science director of SCEC.

The GPS measurements also will be useful to characterize earthquake damage. "The network will help agencies monitor important structures. GPS receivers placed on or near dams, bridges and buildings would allow off-site detection of probable damage to those structures. We are collaborating with Los Angeles County in a pilot study of continuous GPS monitoring of Pacoima Dam," said Dr. Ken Hudnut, SCIGN executive board member at the U.S. Geological Survey in Pasadena.

Many of the receivers are being placed at schools so that students can be involved in the experiment. SCEC's "Global Science Classroom" at the University of Southern California has formed a partnership with JPL, several school districts and educators' groups to develop a science unit for use in schools. The unit, titled "The Elastic Planet," will give students access to the data being gathered by the network.

"This network is a model of interagency cooperation between NASA, the U.S. Geological Survey and the National Science Foundation, as well as with local governments and schools," Goldin said. "Students will get hands-on science experience in using real data. It should ignite their enthusiasm for science while providing a genuine public service."

SCIGN is a consortium of institutions with a common interest in using GPS for earthquake research and mitigation. The consortium is coordinated by the SCEC, a National Science Foundation Science and Technology Center headquartered at the University of Southern California. The lead institutions in the installation and operation of SCIGN are: JPL, the Institute of Geophysics and Planetary Physics-Scripps Institution of Oceanography at the University of California, San Diego, the United States Geological Survey, the University of California, Los Angeles and USC.

-end-

NASA press releases and other information are available automatically by sending an Internet electronic mail message to domo@hq.nasa.gov. In the body of the message (not the subject line) users should type the words "subscribe press-release" (no quotes). The system will reply with a confirmation via E-mail of each subscription. A second automatic message will include additional information on the service. NASA releases also are available via CompuServe using the command GO NASA.

News Release

National Aeronautics and
Space Administration

Washington, DC 20546
(202) 358-1600

For Release
October 29, 1996

Debbie Rahn/Ed Campion
Headquarters, Washington, DC
(Phone: 202/358-1778)

James Hartsfield
Johnson Space Center, Houston, TX
(Phone: 713/483-5111)

Lisa Malone
Kennedy Space Center, FL
(Phone: 407/867-2468)

NOTE TO EDITORS: N96-72

NASA MANAGERS DEFER SETTING STS-80 LAUNCH DATE PENDING RESOLUTION OF ROCKET MOTOR NOZZLE ISSUE

NASA managers decided late Monday to defer setting a launch date for the next Shuttle mission in order to allow time for additional analysis of nozzle erosion seen on one Reusable Solid Rocket Motor (RSRM) used on the STS-79 launch in September. Managers will meet again Nov. 4 to set a launch date for STS-80.

Meanwhile, the Kennedy Space Center launch team continues to prepare Columbia for an option to launch as early as Nov. 8, pending further review of the nozzle analysis.

The analysis being conducted concerns insulation material located in the nozzle of the RSRM. During the STS-79 post-flight inspection, technicians found the insulation in the nozzle throat area had experienced greater than normal erosion in one of the two RSRM nozzles. The erosion presented no safety of flight issue with the STS-79 launch, but managers want to better understand the situation before committing to the next launch.

"Our decision to defer setting a launch date allows the team time to insure the RSRM nozzles are safe to fly," said Space Shuttle Program Manager Tommy Holloway. "We will take whatever time is necessary to fully understand the phenomenon seen on the STS-79 boosters before we proceed with the STS-80 launch".

- more -

The STS-80 mission is NASA's final Shuttle flight scheduled for 1996. During the planned 16-day mission, Columbia's astronauts will deploy and retrieve two science satellites and two of the astronauts will conduct a pair of space walks to fine-tune techniques which will be used during the assembly of the International Space Station.

- end -

NASA press releases and other information are available automatically by sending an Internet electronic mail message to domo@hq.nasa.gov. In the body of the message (not the subject line) users should type the words "subscribe press-release" (no quotes). The system will reply with a confirmation via E-mail of each subscription. A second automatic message will include additional information on the service. NASA releases also are available via CompuServe using the command GO NASA.

News Release

National Aeronautics and
Space Administration
Washington, DC 20546
(202) 358-1600

For Release

October 29, 1996

Don Savage
Headquarters, Washington, DC
(Phone: 202/358-1547)

Diane Farrar
Ames Research Center, Mountain View, CA
(Phone: 415/604-9000)

RELEASE: 96-219

RESEARCH SUGGESTS MOST OF EARTH'S OXYGEN SUPPLY WAS PRODUCED BY GEOLOGIC EVENTS

Refined calculations and new evidence support a revolutionary suggestion that global-scale geologic events produced the bulk of Earth's oxygen supply, a NASA scientist reported today.

Scientists have long believed that oxygen collected in Earth's early atmosphere as a by-product of plant life from a process called photosynthesis, in which plants take carbon dioxide and water to produce organic matter and oxygen. Dr. David DesMarais, of NASA's Ames Research Center, Mountain View, CA, first suggested in 1992 a relationship between oxygen and the collision of continents, the resultant colossal mountain ranges and increased erosion burying huge amounts of organic matter in ocean beds.

"Although photosynthesis did provide an oxygen source strong enough to sustain the amount of existing oxygen, the creation and assembly of large modern-sized continents was responsible for early dramatic increases in oxygen," DesMarais said.

DesMarais today reported new evidence supporting his findings at the Geological Society of America meeting in Denver.

DesMarais' research correlates oxygen "surges" in the atmosphere 2.2 to 2.0 billion years ago with changes in the amount of carbon stored in Earth's crust at that time. During that time, several of Earth's "micro" continents crashed together forming new, stable modern-sized continents. As the continental fragments collided, towering mountain ranges formed. Their steep slopes produced rapid erosion and sedimentation, key to DesMarais' theory.

Organic matter is normally consumed by bacteria and animals, a process that utilizes oxygen (respiration), producing energy and carbon dioxide and water as by-products. According to DesMarais, when huge amounts of organic matter were buried during cataclysmic collisions, oxygen was freed to accumulate in Earth's early atmosphere.

-more-

"The cycle of photosynthesis (which produces oxygen) and respiration (where oxygen is consumed) is an almost break-even process," DesMarais said. Only when large amounts of organic material are buried in ocean sediments during tectonic upheavals can the amount of oxygen in the atmosphere increase substantially, he added.

An independent recent study concludes that approximately three large continental masses were assembled between 2.5 and 1.9 billion years ago by the collision of smaller land masses. Two of these were assembled between 2.2 and 1.9 billion years ago. These collisions formed Himalayan-class mountains with high rates of sedimentation in the ocean, burying organic matter.

According to DesMarais, the formation of stable, large continents also protects and stores larger amounts of organic carbon for hundreds of millions of years, further allowing the atmosphere to accumulate large amounts of free oxygen.

Furthermore, new calculations by DesMarais reveal that the increases in atmospheric oxygen and sulfate (oxidized sulfur) in seawater, between 2.2 and 2.0 billion years ago were too large to be explained only by the slow decline in volcanic activity over Earth's history. The decline in volcanism had been previously offered as an alternative to DesMarais' continental evolution hypothesis.

DesMarais' research is supported by the space science division at the Ames Research Center and the Exobiology Program in NASA's Office of Space Science, Headquarters, Washington, DC.

-end-

VideoAdvisory

National Aeronautics and
Space Administration

Washington, D.C. 20546
(202) 358-1600

For Release
October 30, 1996

Deanna Corridon
Headquarters, Washington, DC
(Phone: 202/358-1733)

VIDEO ADVISORY: V96-131

**A VOYAGE INTO THE EYE OF HURRICANE FRAN;
SCIENTISTS USE HI-TECH LASER TECHNOLOGY TO COMB BEACHES**

On Wednesday the NASA TV Video File will feature high definition animation of a voyage into the eye of Hurricane Fran. The animation was created from a National Oceanic & Atmospheric Administration (NOAA) GOES satellite image that has been enhanced at NASA's Goddard Space Flight Center Laboratory for Atmospheres, Greenbelt, MD. NASA TV also will televise B-roll of scientists flying up and down the east coast using space-age laser technology to map beach erosion damage created from Hurricane Fran.

ITEM #1: INTO THE EYE OF A HURRICANE
Animation depicting a voyage into the eye of Hurricane Fran. *For more information contact Doug Isbell at (202) 358-1753 or Allen Kenitzer at (301) 286-2806.*

ITEM #2: INTERVIEW -- DR. PETER BLACK, RESEARCH METEOROLOGIST, NOAA/HURRICANE RESEARCH DIVISION
Discusses advances in forecasting hurricanes.

ITEM #3: INTERVIEW -- DR. FRITZ HASSLER, RESEARCH METEOROLOGIST, NASA GODDARD SPACE FLIGHT CENTER
Explains technological advancements in hurricane research.

ITEM #4: HIGH-TECH BEACH COMBING
B-roll from research flight over Wallops Island, VA, and local coastline. *For more information contact Doug Isbell at (202) 358-1753 or Keith Kohler at (804) 824-1579.*

ITEM #5: INTERVIEW -- BILL KRABILL, LASER SCIENTIST
Explains the benefits of the Laser System.

Video news files will air today at 3, 6, 9 p.m. and midnight EDT.

NASA Television is broadcast on Spacenet 2, transponder 5, channel 9, C-Band, located at 69 degrees West longitude, with horizontal polarization. Frequency is on 3880.0 megahertz, with audio on 6.8 megahertz.

- end -

News Release

National Aeronautics and
Space Administration

Washington, DC 20546
(202) 358-1600

For Release

Douglas Isbell
Headquarters, Washington, DC
(Phone: 202/358-1753)

October 30, 1996

Catherine E. Watson
Langley Research Center, Hampton, VA
(Phone: 804/864-6122)

RELEASE: 96-220

NASA TEAM FINDS URBAN-LIKE POLLUTION IN TROPICAL SOUTH ATLANTIC

A NASA research team has found high concentrations of ozone, comparable to urban pollution levels, in the lower atmosphere over the tropical South Atlantic Ocean. The pollution has been linked to intense, seasonal biomass burning in South America and Africa, providing convincing evidence that human activities are extending their impact further, and in more diverse ways, into regions of traditionally pristine air.

"Most people don't realize that over a hundred thousand square miles of vegetation are burned each year in southern Africa, an area larger than that burned in South America," said Dr. Jack Fishman, mission scientist for the experiment from NASA's Langley Research Center, Hampton, VA.

The new research findings are reported today in a special issue of the Journal of Geophysical Research. The findings are based on data from an experiment called the Transport and Chemistry near the Equator over the Atlantic (TRACE-A), which was conducted by NASA, the Brazilian Space Agency (INPE) and scientists in South Africa. "The purpose of our mission was to understand how much each continent contributed to the observed pollution pool, and to gain an understanding of the unusual chemistry taking place in a part of the world's atmosphere so far removed from the origin of the pollution," Fishman said.

According to Fishman, the pollutants drift over the tropical South Atlantic Ocean, where the wind pattern traps them. Chemical processes, driven by very bright sunlight, then produce a smog similar to what is found in industrialized areas of the world. Eventually, the plumes of ozone and other pollutants produced by those chemical processes extend to the far reaches of the Indian Ocean, and there is some evidence that traces are seen as far away as Australia.

-more-

"As a result of TRACE-A, our understanding of the atmospheric chemistry of the entire Southern Hemisphere is greatly improved," Fishman added. "And we now realize that the composition of the atmosphere in what was once thought to be one of the cleanest regions in the world has also been greatly altered by human activity."

Most of the Earth's ozone is found in a layer in the stratosphere, which begins about 20 miles above the surface. It is produced by the interaction of sunlight with oxygen and other gases that occur naturally in the upper atmosphere. The stratospheric ozone layer provides a shield from harmful ultraviolet radiation from the Sun. In the lower atmosphere, however, ozone is a toxic gas that has long been known to exist in harmful amounts over highly populated, heavily industrialized regions. Its occurrence in large amounts in remote parts of the atmosphere has been much rarer, however.

More than 300 scientists from 14 nations participated in TRACE-A and its concurrent counterpart, the Southern African Fire-Atmosphere Research Initiative (SAFARI). Their work has shed new light on the impact and extent of human activities on the atmosphere and has provided data that will help to understand the links that may exist between the chemical makeup of the atmosphere and the Earth's climate.

NASA's major contribution to TRACE-A was a DC-8 research aircraft carrying special instruments for very sensitive measurements of ozone and the gases that produce it in the atmosphere. The instruments carried by the DC-8 could measure a wide variety of trace gases down to the parts per trillion level (one-millionth of a part per million). During TRACE-A, the DC-8 flew more than 70,000 miles, probing the air over South America, southern Africa and the vast expanses of the South Atlantic and Indian Oceans. On-board the DC-8, a dozen scientists and their support crews from several NASA centers and U.S. universities operated sophisticated instruments, including airborne lasers to measure ozone and smoke particles above and below the aircraft.

TRACE-A also utilized an operational satellite to map the large-scale distribution of ozone and biomass burning patterns. In addition, a series of ozone sensors launched aboard weather balloons and enhanced weather measurements provided information about the transport of the various trace gases and the physical processes responsible for their observed distributions in the atmosphere. Computer models also were used to integrate the results and to help interpret them. The experiment is part of NASA's Mission to Planet Earth, a long term, coordinated research effort to study the Earth as a global environmental system.

Additional information and figures for TRACE-A and NASA's Global Tropospheric Experiment are accessible through the Internet at:

http://asd-www.larc.nasa.gov/lidar/lidar.html

A data illustration is available to news media representatives from the NASA Imaging Branch on 202/358-1900. The photo number is 96-HC-715.

-end-

News Release

National Aeronautics and
Space Administration
Washington, DC 20546
(202) 358-1600

For Release

October 30, 1996

Douglas Isbell
Headquarters, Washington, DC
(Phone: 202/358/1753)

Keith Koehler
Wallops Flight Facility, Wallops Island, VA
(Phone: 757/824-1579)

Jennet Robinson
NOAA Coastal Services Center, Charleston, SC
(Phone: 803/974-6210)

RELEASE: 96-221

NASA AND NOAA MAPPING BEACHES TO UNDERSTAND EFFECTS OF COASTAL STORMS

A Category 4 hurricane slowly makes its way up the East Coast of the United States, pounding Atlantic beaches for days with heavy surf and higher than normal tides. As the hurricane makes landfall, a 10-foot storm surge crosses the beach. Days later, the tide returns to normal and officials begin to assess the damage from the storm.

Powerful storms such as hurricanes can dramatically change the face of the coastline, eroding sand beaches in one area while increasing beach areas in another. Properly assessing the impacts of such storms is an enormous task. Now NASA and the National Oceanic and Atmospheric Administration (NOAA) are combining efforts to provide public officials with the tools they need to accurately assess coastal erosion.

The goal of the joint project between the NASA Goddard Space Flight Center's Wallops Flight Facility, Wallops Island, VA, and NOAA's Coastal Service Center (CSC), Charleston, SC, is to produce a highly detailed baseline map of the beaches between Cape Henlopen, DE, and Charleston, an expanse of more than 560 miles, using airborne laser technology.

Federal, state and local agencies have traditionally relied on photographs and spot surveys to assess the changing coastline. While these methods provide much needed data, they do not provide a precise enough account of topographical changes due to storms for the agencies to conduct fully effective shoreline development planning or beach replenishment programs, according to NASA Wallops principal investigator Bill Krabill.

-more-

"The use of the NASA instrumentation will provide cost effective and highly accurate mapping of beach erosion in particular, which is of great interest and concern to coastal communities," said John Brock, Coastal Remote Sensing Program Manager with NOAA. "Due to the high human and economic costs associated with flooding and other coastal hazards, this type of information will help to support sustainable beach development and improved coastal management."

The survey is being performed with the NASA Airborne Terrain Mapper (ATM) flown on a NOAA Twin Otter aircraft. The ATM collects 3,000 to 5,000 spot elevations per second as the aircraft travels over the beach at approximately 150 feet per second. Using the ATM and a Global Positioning System (GPS) satellite receiver, researchers have been able to survey the beach elevations to an accuracy of four inches. NASA has surveyed the beaches from the low water line to the landward base of the sand dunes.

"With the gathering of this baseline data, officials will for the first time have the capability to accurately quantify beach damage from a coastal storm," Krabill said. Once the baseline study is completed and the use of this technology verified, the intent is to turn the technology over to the commercial sector to conduct future mapping for those assessing beach topography, according to Krabill, a researcher in the Observational Science Branch at Wallops.

The ATM has previously been used primarily in the measurement of Greenland and ice sheets in the surrounding area. Scientists are mapping these ice sheets to examine response to climatic changes in the Northern Hemisphere.

The East Coast beach mapping field work is being conducted in two stages. During October 1996, a preliminary survey was made over a number of critical sections. A complete survey is planned for the summer of 1997.

The areas surveyed in October include the coast between Cape Henlopen and Wallops Island; Virginia Beach, VA, to Oregon Inlet on the Outer Banks of North Carolina; Wrightsville, Top Sail and Myrtle Beaches in North and South Carolina recently hit by Hurricane Fran; as well as Folley and Isle of Palms Beaches north of Charleston.

NASA is responsible for the operation of the ATM and the initial processing of the data. Mission planning and the follow-on processing of the survey information and its conversion into a format that can be directly used in Geographic Information Systems will be jointly done by NASA Wallops and CSC.

NOAA will take the lead in coordinating with different state and Federal agencies responsible for beach monitoring. The coordination with these agencies will include the organization of supporting beach ground surveys and the dissemination of the resulting airborne survey data base.

-end-

News Release

National Aeronautics and
Space Administration

Washington, DC 20546
(202) 358-1600

For Release

Dave Steitz
Headquarters, Washington, DC
(Phone: 757/824-1776)

October 30, 1996

Keith Koehler
Wallops Flight Facility, Wallops Island, VA
(Phone: 757/824-1579)

RELEASE: 96-222

SAC-B/HETE LAUNCH HALTED

Launch of the SAC-B and HETE satellites aboard an Orbital Sciences Corporation (OSC) Pegasus XL launch vehicle was halted today during the terminal countdown. Officials said the locking pin on the rudder of the Pegasus vehicle did not disengage. After repeated commands to disengage the pin, the allowable time window for launch after activating the fin battery lapsed. This condition requires an automatic return to the Wallops Flight Facility.

During the flight of the OSC L-1011 carrier aircraft, there were no indications of anomalies with either the SAC-B or HETE spacecraft. The replacement of the single-use thermal battery requires a minimum of two days. However, the new launch date will not be set until analysis of the problem can be completed.

- end -

VideoAdvisory

National Aeronautics and
Space Administration

Washington, D.C. 20546
(202) 358-1600

For Release
October 31, 1996

Deanna Corridon
Headquarters, Washington, DC
(Phone: 202/358-1733)

VIDEO ADVISORY: V96-132

STS-80 SHUTTLE MISSION ANIMATION

On Thursday the NASA TV Video File will feature animation depicting STS-80 Shuttle mission activities, including two planned space walks. Launch is tentatively targeted for November 8. NTV also will replay high definition animation of a voyage into the eye of Hurricane Fran and B-roll of scientists flying up and down the east coast using space-age laser technology to map beach erosion created by Fran.

ITEM #1: STS-80 ANIMATION
Animation depicting upcoming mission activities. *For more information contact Rob Navias at (713) 483-5111.*

ITEM #2: REPLAY - INTO THE EYE OF A HURRICANE

ITEM #3: REPLAY - INTERVIEW -- DR. PETER BLACK, RESEARCH METEOROLOGIST, NOAA/HURRICANE RESEARCH DIVISION

ITEM #4: REPLAY - INTERVIEW -- DR. FRITZ HASSLER, RESEARCH METEOROLOGIST, NASA GODDARD SPACE FLIGHT CENTER

ITEM #5: REPLAY - HIGH-TECH BEACH COMBING

ITEM #6: REPLAY - INTERVIEW -- BILL KRABILL, LASER SCIENTIST

Video news files air noon, 3, 6, 9 p.m. and midnight EDT.

NASA Television is broadcast on Spacenet 2, transponder 5, channel 9, C-Band, located at 69 degrees West longitude, with horizontal polarization. Frequency is on 3880.0 megahertz, with audio on 6.8 megahertz.

- end -

News Release

National Aeronautics and
Space Administration
Washington, DC 20546
(202) 358-1600

For Release

November 1, 1996

Don Savage
Headquarters, Washington, DC
(Phone: 202/358-1547)

Tammy Jones
Goddard Space Flight Center, Greenbelt, MD
(Phone: 301/286-5566)

Ray Villard
Space Telescope Science Institute, Baltimore, MD
(Phone: 410/338-4514)

NOTE TO EDITORS: N96-74

NEW HUBBLE IMAGES SHOW DUST STORMS AT MARS NORTH POLE

Two Hubble Space Telescope images of Mars, taken about a month apart on September 18 and October 15, 1996, reveal a Texas-sized dust storm churning near the edge of the Martian north polar cap. The polar storm is probably a consequence of large temperature differences between the polar ice and the dark regions to the south, which are heated by the springtime Sun.

Mars is famous for large, planet-wide dust storms. Smaller storms resembling the one seen here were observed in other regions by Viking orbiters in the late 1970s. However, this is the first time that such an event has been caught near the receding north polar cap. This kind of advanced planetary "weather report" will be invaluable for aiding preparation for the landing of NASA's Pathfinder spacecraft in July 1997 and the arrival of Mars Global Surveyor (MGS) orbiter in September 1997. The MGS mission is scheduled for launch on November 6, and the Mars Pathfinder is scheduled for launch December 2.

Images to accompany this release are available to news media representatives by calling the Headquarters Imaging Branch at 202/358-1900. The NASA color photo number is 96-HC-716.

The images are also available electronically through the Internet on the NASA Headquarters World Wide Web home page "Today@NASA" located at:
http://www.hq.nasa.gov/office/pao/NewsRoom/today.html

-more-

Image files in GIF and JPEG format and captions may be accessed on the Internet via anonymous ftp from ftp.stsci.edu in /pubinfo.

	GIF	JPEG
PRC96-34 Mars Dust Storms	gif/marsds96.gif	jpeg/marsds96.jpg

Higher resolution digital versions (300 dpi JPEG) of the release photograph are available in /pubinfo/hrtemp: 96-34 (color) and 96-34bw.jpg (black/white).

GIF and JPEG images, captions and press release text are available via World Wide Web at http://www.stsci.edu/pubinfo/PR/96/34.html and via links in: http://www.stsci.edu/pubinfo/Latest.html or http://www.stsci.edu/pubinfo/Pictures.html.

- end -

NASA press releases and other information are available automatically by sending an Internet electronic mail message to domo@hq.nasa.gov. In the body of the message (not the subject line) users should type the words "subscribe press-release" (no quotes). The system will reply with a confirmation via E-mail of each subscription. A second automatic message will include additional information on the service. NASA releases also are available via CompuServe using the command GO NASA.

VideoAdvisory

National Aeronautics and
Space Administration

Washington, D.C. 20546
(202) 358-1600

For Release
November 1, 1996

Deanna Corridon
Headquarters, Washington, DC
(Phone: 202/358-1733)

VIDEO ADVISORY: V96-133

STUDENTS TAKE A VIRTUAL TRIP TO MARS; IMAGES OF DUST STORMS ON MARS

On Friday the NASA TV Video File will feature a group of students taking a virtual trip to Mars when they remotely steer a Russian-built robotic rover called Marsokhod through the Arizona desert located on a Navajo Indian reservation from their classrooms. The test will be used by NASA to simulate future exploration of Mars. NASA TV also will televise two Hubble Space Telescope images of Mars, taken about a month apart, revealing a Texas-sized dust storm near the edge of the Martian north polar cap.

ITEM #1: VIRTUAL TRIP TO MARS
B-roll of students working with rover. *For more information contact Doug Isbell at (202) 358-1753 or Mike Mewhinney at (415) 604-3937.*

ITEM #2: ROVING IN THE DESERT
Footage of the remotely controlled Russian Mars rover on a Navajo Indian reservation in Arizona.

ITEM #3: MARS VIKING VIEW
Panoramic views from the Mars Viking.

ITEM #4: INTERVIEW - DR. CAROL SROKER
Discusses the Russian Mars rover tests.

ITEM #5: SPRING STORM ON MARS
View of a Martian spring storm. *For more information contact Doug Isbell at (202) 358-1753 or Mike Mewhinney at (415) 604-3937.*

ITEM #6: NEW MARS IMAGE
A image of a 600-mile dust storm possibly caused by springtime solar heating.

ITEM #7: MARS ROTATION MOVIE
Animation of previous Hubble Space Telescope observations indicating no storms near the Martian north pole. (From February 25, 1995)

Video news files air noon, 3, 6, 9 p.m. and midnight EDT.

NASA Television is broadcast on Spacenet 2, transponder 5, channel 9, C-Band, located at 69 degrees West longitude, with horizontal polarization. Frequency is on 3880.0 megahertz, with audio on 6.8 megahertz.

- end -

News Release

National Aeronautics and
Space Administration
Washington, DC 20546
(202) 358-1600

For Release

Douglas Isbell
Headquarters, Washington, DC
(Phone: 202/358-1753)

November 1, 1996

Mike Mewhinney
Ames Research Center, Mountain View, CA
(Phone: 415/604-3937)

RELEASE: 96-223

STUDENTS TO REMOTELY CONTROL RUSSIAN MARS ROVER IN DESERT TESTS

A group of young students will take a virtual trip to Mars this month when they remotely steer a Russian-built robotic rover through a barren Arizona desert from their classrooms.

The experiment is one of several NASA activities designed to develop the next generation of planetary rovers that will explore Mars early next century. The first Mars rover, aboard NASA's Mars Pathfinder lander mission, is due for launch on December 2.

Using their computers and the Internet, the students will control the rover as it navigates through a sparsely-vegetated area during a NASA field test to simulate future robotic exploration of the red planet. The test site is located near Flagstaff on a Navajo Indian reservation adjacent to U.S. Highway 160. Students in Tuba City schools will steer the robotic vehicle Nov. 1 and again on Nov. 12.

Scientists consider the site to be an excellent analog for Martian terrain. The fact that the site is located on a Navajo Indian reservation makes it even more special to the science team, according to project leader Dr. Carol Stoker, a planetary scientist from NASA's Ames Research Center, Mountain View, CA.

"Beyond the fact that it's a good Mars analog, a big motivator for us in choosing this site was to give a community that is not extensively involved in space exploration a first-hand, up close and personal kind of experience with NASA scientists in the field," Stoker said.

"You'd think that going out into the middle of a desert, people there would not necessarily be interested in space exploration," Stoker added. "However, what I found is that there is a tremendous amount of excitement about space travel. It was just like I'd walked into the next building back at Ames and was talking to a bunch of rocket scientists."

-more-

"Space travel is kind of a religious, mythical experience for the Navajo people," said Emmit Kerley, community services coordinator for the Tuba City Chapter of the Navajo Nation. "In Navajo mythology, we believe that we came down from the stars and that it is our destiny to return to the stars."

During the field tests from Nov. 4-9, scientists will conduct a six-day Mars science mission simulation using the Marsokhod. The Russian-built robotic vehicle is equipped with American avionics, computers and science instruments.

The Marsokhod, or Mars rover, features six titanium wheels, a robotic arm to pick up rock and sediment samples and stereo video cameras mounted on a pan and tilt platform to transmit live images of the field test via satellite back to scientists at Ames. Scientists at Ames will control the Marsokhod using a Virtual Environment Vehicle Interface (VEVI) rover control software. Scientists will communicate with the rover using a portable satellite communication antenna at the test site.

"We're using virtual reality as a substitute for live video because of the time delay in radio communications between Mars and Earth," Stoker said. "A virtual reality model shows where you are in the terrain and gives you a sense of presence in that space you don't have because of the long time delay."

In addition to Stoker, the six-member field team includes Dr. Michael Sims, Daryl Rasmussen, Dan Christian and Jeff Moore, all from Ames, and Ron Greeley of Arizona State University. On Nov. 12, the scientists will conduct another educational outreach activity involving students from several Arizona schools remotely controlling the Marsokhod using their classroom computers. Persons wishing to access the Internet web site for the field tests may visit the following URL:

http://img.arc.nasa.gov

Approximately 200 students from 10-15 schools in the Tuba City, AZ, area have been invited to participate in the Mars rover activity on Nov. 1. Schools include Greyhills Academy High School, Tuba City High School, Tuba City Junior High School, Tuba City Boarding School (K-8), and Eagles Nest Intermediate School all of Tuba City; Toneala Elementary School; Kayenta High School, Kayenta; Moenkopi Day School; Hopi Junior and Senior High School located on the Hopi Reservation in Keams Canyon, and Shiprock High School, Shiprock, AZ. The Institute for Native Americans at Northern Arizona University and the Rural Systemic Initiative, which is funded by the National Science Foundation, helped arrange the Mars field test on the Navajo Reservation and coordinate the student activities.

Russian engineers from the Lavochkin Association in Moscow and several Navajo students will participate in this month's desert field test by working with the NASA scientists in the remote "mission control station" located at Ames. The technology being tested may be used in a proposed joint Russian-American mission called "Mars Together," tentatively scheduled for launch by the Russians in the year 2001.

-end-

News Release

National Aeronautics and
Space Administration
Washington, DC 20546
(202) 358-1600

For Release

Ed Campion
Headquarters, Washington, DC
(Phone: 202/358-1778)

November 4, 1996

Eileen Hawley
Johnson Space Center, Houston, TX
(Phone: 713/483-5111)

RELEASE: 96-224

CANADIAN PAYLOAD SPECIALIST JOINS STS-85 CREW

Canadian Space Agency astronaut Bjarni Tryggvason has been added to the crew of STS-85 as a payload specialist candidate for Discovery's 11-day mission to study changes in the Earth's atmosphere. The flight is scheduled for launch in July 1997.

Tryggvason will support the Canadian-sponsored Microgravity Vibration Isolation Mount (MIM) investigation. MIM is a small double-locker size device designed to isolate International Space Station payloads and experiments from disturbances created by thruster firings or crew activity. MIM will be operated for 30 hours with real-time data transmission to investigators on the ground.

The rest of the STS-85 crew, Commander Curtis L. Brown, Jr. (Lt. Col., USAF), Pilot Jeffrey S. Ashby (Cmdr., USN) and Mission Specialists N. Jan Davis, Ph.D., Robert L. Curbeam, Jr., (Lt. Cmdr., USN), and Stephen K. Robinson, Ph.D, were named in September.

For complete biographical information on the STS-85 crew and other astronauts, see the NASA Internet astronaut biography home page at address: http://www.jsc.nasa.gov/Bios/

-end-

News Release

National Aeronautics and
Space Administration

Washington, DC 20546
(202) 358-1600

For Release

November 4, 1996

Ed Campion
Headquarters, Washington, DC
(Phone: 202/358-1780)

James Hartsfield
Johnson Space Center, Houston, TX
(Phone: 713/483-5111)

Bruce Buckingham
Kennedy Space Center, FL
(Phone: 407/867-2468)

RELEASE: 96-225

STS-80 LAUNCH TARGETED ONE WEEK LATER TO ALLOW COMPLETION OF SOLID ROCKET NOZZLE EROSION ANALYSIS, EVALUATION

NASA managers today decided to change the target date for Columbia's launch on STS-80 to no earlier than Nov. 15, pending availability of the Eastern Test Range.

The new target date allows engineers additional time to complete their analysis and evaluation of nozzle erosion that was found on one Reusable Solid Rocket Motor from Atlantis' September flight on STS-79. Previously, managers had retained an option of launching Columbia as early as Nov. 8.

Shuttle managers plan to reconvene a Flight Readiness Review panel during the week of Nov. 11 to hear the findings from the solid rocket motor analysis.

"Everyone involved with the investigation of this issue has been doing a superb job and it appears the effort is nearing a point where it will provide us with a good understanding of the phenomenon," Space Shuttle Program Manager Tommy Holloway said. "However, this additional week will ensure the final portions of the investigation are not rushed, and it will allow those involved to organize and present their data in the best way possible as they draw their conclusion."

The STS-80 mission is NASA's final Shuttle flight scheduled for 1996. During the 16-day mission, Columbia's astronauts will deploy and retrieve two science satellites and two of the astronauts will conduct a pair of space walks to fine-tune techniques which will be used during the assembly of the International Space Station.

-end-

News Release

National Aeronautics and
Space Administration
Washington, DC 20546
(202) 358-1600

For Release
November 4, 1996

Douglas Isbell
Headquarters, Washington, DC
(Phone: 202/358-1753)

Franklin O'Donnell
Jet Propulsion Laboratory, Pasadena, CA
(Phone: 818/354-5011)

RELEASE: 96-226

GALILEO MAKES CLOSE PASS BY CALLISTO

For the first time, NASA's Galileo spacecraft flew close to Jupiter's moon Callisto this morning (Nov. 4), passing within 686 miles of the stark, crater-studded natural satellite at 8:34 a.m. EST.

The flyby was by far the closest any spacecraft has ever come to Callisto, the outermost of the four big moons orbiting Jupiter that were first discovered by the spacecraft's namesake, Italian astronomer Galileo Galilee. Signals confirming the event were received on Earth 46 minutes later.

Data from this Callisto flyby and another one next June should help resolve questions about why this seemingly inactive, pockmarked moon is so different from its vastly more active siblings -- tectonic Ganymede, volcanic Io and Europa, which may have an ocean beneath its cracked, icy crust.

Callisto is the outermost and, apparently, least active of Jupiter's four major Galilean satellites. The 2,400-mile-diameter moon is the second largest of Jupiter's 16 known moons. Its aged appearance is its most distinctive known feature. It has the oldest, most cratered face of any body yet observed in the solar system.

"With data from this encounter, we'll know more about why Callisto is so different from Jupiter's more lively moons," said Galileo Project Scientist Dr. Torrence V. Johnson of NASA's Jet Propulsion Laboratory (JPL), Pasadena, CA.

"Some of the most interesting aspects of the Callisto flyby are actually the observations we're making of other bodies, such as Jupiter and Europa. We're coming to within about 21,100 miles of Europa and about 409,000 miles of Jupiter. Looking at their dark sides, we should get some very good data from atmospheric measurements and auroral searches," he said.

-more-

Science instruments on the spacecraft were pre-programmed to take measurements of Callisto's surface to determine its composition and history, to look for evidence of any activity such as tectonism, and to search for hints of any magnetic field that may be generated by the moon. While some of the data are sent back to Earth immediately, much of it, including all the images, are being recorded on the spacecraft tape recorder for playback to Earth over the next few weeks.

Like Jupiter's biggest moon, Ganymede, Callisto seems to have a rocky core surrounded by ice. Unlike the other large moons of Jupiter, however, the surface of Callisto is completely covered with scars left by tens of thousands of meteoric impacts. Although the exact rate of impact crater formation is not known, scientists estimate that it would require several billion years to accumulate the number of craters found there, so Callisto is believed to have been inactive at least that long.

The Callisto flyby marks the start of a new telecommunications capability created to maximize the amount of data that can be received from Galileo. The giant antennas that listen to NASA's exploratory robots in deep space have been augmented this week with the inauguration of a new link between the agency's Deep Space Network telecommunications stations in California and Australia and Australia's Parkes radio astronomy antenna.

NASA's intercontinental link-up -- or "arraying" -- of giant antennas was developed to retrieve the maximum amount of data possible from NASA's Galileo spacecraft, whose planned high-speed, high-power telecommunications voice was reduced to a whisper when its main antenna failed to open four years ago.

For several hours a day, large collecting areas on these big antennas are being devoted to receiving the spacecraft's faint transmissions concurrently as Galileo nears Callisto and returns data from its flyby. The Callisto encounter occurred with the spacecraft at one of its most distant points from the Earth, which makes receipt of Galileo's weak signal even more difficult. The arraying technique, however, allows more of the spacecraft's signal to be captured, thereby enabling a higher data rate. The arraying will be used daily throughout most of the remainder of the mission.

The debut of routine arraying of the Deep Space Network antennas represents the final installment of several imaginative engineering solutions that have enabled the Galileo Project team to carry out its mission despite the loss of the spacecraft's main telecommunications antenna.

"With our spacecraft software and ground receiving station improvements already in place, this new arraying capability is the icing on the cake," said Galileo Mission Director Neal Ausman of JPL. "The new array is critical to getting Galileo's scientific data from the Jupiter orbital tour back to Earth."

Arraying, together with other improvements in the space-to-ground communications link, increases by 10 times the quantity of raw data received from Galileo than would otherwise be possible. Changes in the way the Galileo spacecraft edits and compresses data, results in an additional factor of 10. When taken together, these improvements enable Galileo to meet 70 percent of its original science goals.

Software changes on the spacecraft now ensure that every bit of science and engineering telemetry from the spacecraft is crammed with as much information as possible. So while the data amount received from Galileo is comparatively small, all of it is highly valued.

Galileo's high-gain antenna was to have provided a 134-kilobit-per-second real-time data rate from Jupiter. Had no improvements been made in the Deep Space Network, only a 10-bit-per-second data rate would have been possible with Galileo's small low-gain antenna for most of the mission. These improvements, however, along with the changes made on the spacecraft, further increase the downlinked data to an effective rate of 1,000 bits per second.

"As the Earth turns relative to Galileo's position in the sky, different arrayed antennas will hand-off the receipt of data from Galileo over a 12-hour period," said Leslie J. Deutsch of JPL, one of the principal innovators behind the solution for Galileo's communications problem. The array electronically links the stadium-size, 230-foot diameter dish antenna at the Deep Space Network complex in Goldstone, CA, with an identical antenna located at the Australia site, in addition to two 112-foot antennas at the Canberra complex. The California and Australia sites concurrently pick up communications with Galileo. The Parkes radio telescope joins in with the Canberra station for six hours each day.

"For two hours each day, a total of up to five antennas are pointing in unison to receive transmissions from Galileo," Deutsch said.

The new hardware, software and operations that make antenna arraying possible for Galileo represents a major improvement in the world's deep space telecommunications system for other missions as well, said Paul Westmoreland, director of telecommunications and mission operations at JPL. The effort cost $30.5 million.

"The methods used and much of the equipment will be especially useful for the new era of our faster, better, cheaper interplanetary missions," Westmoreland said. "This opens the way for mission developers to reduce future spacecraft costs by using smaller spacecraft antennas and transmitters."

In the future, after the Galileo mission, other antennas may be added to routine arraying for spacecraft communications and radio science experiments. Among them are the twenty-seven 82-foot diameter antennas that make up the Very Large Array of radiotelescopes in Socorro, NM, and the 210-foot radio telescope facility at Usuda, Japan.

The new arraying capability sprang forth as an emergency measure to mitigate the loss of Galileo's high-gain antenna, but the effort now represents a permanent change and improvement in the way deep space telecommunications will be conducted from now on, said Joseph I. Statman, telecommunications specialist at JPL, who engineered the system.

"Galileo gets credit for giving arraying a huge push," said Statman. "This is the first time we will see routine arraying of antennas for spacecraft communications day in, day out. The Deep Space Network is now implementing arraying at Goldstone, as part of its standard configuration."

Several 112-foot antennas at Goldstone are to be outfitted with the equipment needed so they can operate together as an array, he said. "This represents the wave of the future because no more 70-meter antennas will be built for the Deep Space Network; only 34-meter antennas will be added to the network from now on. When future spacecraft with small transmitters and antennas require a higher downlink data rate, we will have a field of antennas with which we can manage and satisfy our customers' demands for telecommunications resources."

JPL manages the Galileo project for NASA's Office of Space Science, Washington, DC.

-end-

News Release

National Aeronautics and
Space Administration

Washington, DC 20546
(202) 358-1600

For Release

November 4, 1996

David E. Steitz
Headquarters, Washington, DC
(Phone: 202/358-1730)

George Diller
Kennedy Space Center, FL
(Phone: 407/867-2468)

Keith Koehler
Wallops Flight Facility, Wallops Island, VA
(Phone: 757/824-1579)

Barron Beneski
Orbital Sciences Corp., Dulles, VA
(Phone: 703/406-5528)

RELEASE: 96-227

PEGASUS LAUNCH ANOMALY UNDER INVESTIGATION

Preliminary analysis of today's launch of the SAC-B and HETE spacecraft indicates that the Orbital Sciences Corporation's Pegasus XL third stage failed to separate properly. Both spacecraft are still attached to the third stage in low Earth orbit.

Project officials believe up to four of the five scientific instruments aboard SAC-B may still be able to return scientific data. The HETE spacecraft was unable to deploy its solar arrays and battery failure is expected today.

The Pegasus launch occured at approximately 12:09 p.m. EST offshore from NASA's Wallops Flight Facility in Virginia. The Pegasus vehicle achieved the desired orbit of 265 nautical miles by 297 nautical miles at an inclination of 38 degrees.

NASA attempted to acquire a signal from the spacecraft through the Goldstone tracking station in California, and successfully sent commands and received data from SAC-B through the Wallops tracking station at the end of the first orbit.

-more-

Further analysis of the problem is currently underway. An investigation board has been convened by Orbital Sciences to determine the cause of the problem. NASA's Goddard Space Flight Center also has convened an independent board to investigate the launch anomaly.

SAC-B (Scientific Applications Satellite-B), a 400-pound spacecraft, is an international cooperative project between NASA and Argentina's National Commission of Space Activities. HETE (High Energy Transient Experiment), a 275-pound spacecraft, is a cooperative project between the Massachusetts Institute of Technology and the Goddard Space Flight Center's International Projects Office, Greenbelt, MD.

The Pegasus XL, built by Orbital Sciences of Dulles, VA, is a three-stage, solid propellant booster system carried aloft by an L-1011 jet aircraft and released at an altitude of about 40,000 feet and an airspeed of Mach 0.8.

- end -

NASA press releases and other information are available automatically by sending an Internet electronic mail message to domo@hq.nasa.gov. In the body of the message (not the subject line) users should type the words "subscribe press-release" (no quotes). The system will reply with a confirmation via E-mail of each subscription. A second automatic message will include additional information on the service. NASA releases also are available via CompuServe using the command GO NASA.

VideoAdvisory

National Aeronautics and
Space Administration

Washington, D.C. 20546
(202) 358-1600

For Release
November 5, 1996

Deanna Corridon
Headquarters, Washington, DC
(Phone: 202/358-1733)

VIDEO ADVISORY: V96-135

MARS GLOBAL SURVEYOR TO LAUNCH NOVEMBER 6

On Tuesday the NASA TV Video File will feature new animation of the Mars Global Surveyor which is currently scheduled to launch on November 6. The animation depicts the Mars Global Surveyor after lift-off, through the deployment of its solar panels. Replaying on NTV will be footage of a series of giant deep space antenna arrays that have just been linked intercontinentally in California and Australia, expanding the ability of NASA's Deep Space Network to communicate with Galileo. NASA TV also will replay five different views of Jupiter's stark, crater-pitted moon, Callisto, taken by Voyager 1 and 2 in 1979.

ITEM #1: MARS GLOBAL SURVEYOR ANIMATION
Animation depicting orbiter after launch. *For more information contact Doug Isbell at (202) 358-1753 or Frank O'Donnell at (818) 354-5011.*

ITEM #2: REPLAY - LISTENING TO GALILEO
Footage of NASA's Deep Space Network.

ITEM #3: REPLAY - INTERVIEW - NEAL AUSMAN, GALILEO DEPUTY FLIGHT DIRECTOR
Explains how the combination of antenna networks allows Galileo's data rate to be significantly increased.

ITEM #4: REPLAY - INTERVIEW - PAT BEYERS, TELECOMMUNICATIONS AND MISSION MANAGER FOR GALILEO
Discusses new arraying capability of the antenna.

ITEM #5: REPLAY - GALILEO'S NEXT STOP: CALLISTO
A series of images taken of Jupiter's moon Callisto by Voyager 1 & 2 in 1979

ITEM #6: REPLAY - INTERVIEW - DR. TORRENCE JOHNSON, GALILEO PROJECT SCIENTIST
Discusses Galileo's next stop, Jupiter's moon Callisto.

Video news files air noon, 3, 6, 9 p.m. and midnight EDT.

NASA Television is broadcast on Spacenet 2, transponder 5, channel 9, C-Band, located at 69 degrees West longitude, with horizontal polarization. Frequency is on 3880.0 megahertz, with audio on 6.8 megahertz.

- end -

News Release

National Aeronautics and
Space Administration

Washington, DC 20546
(202) 358-1600

For Release

Jim Cast
Headquarters, Washington, DC
(Phone: 202/358-1779)

November 6, 1996

Lee Whitney
Lockheed Martin Corp., Bethesda, MD
(Phone: 301/897-6121)

NOTE TO EDITORS: N96-75

X-33 REVIEW UNDERWAY; PAYTON, MATTINGLY TO MEET PRESS

NASA's Director of Space Transportation, Gary Payton, and the Vice President for Lockheed Martin's Reusable Launch Vehicle Program, T.K. Mattingly, will hold an informal meeting at 11 a.m. EST on Wednesday, November 13, to discuss program status and answer questions on the X-33 -- the flagship technology demonstrator in NASA's Reusable Launch Vehicle Program.

The meeting will be held at NASA Headquarters, 300 E Street, SW, Washington, DC, in a fourth floor conference room (Room 4W23). Due to space limitations, and in order to preserve the informal nature of the meeting, cameras will not be permitted. Separate arrangements will be made to accommodate television needs, if any.

The meeting will follow an X-33 government and industry Preliminary Design Review being conducted this week in California to formalize the engineering baseline of the X-33 vehicle prior to moving on to the detailed design phase. The vehicle is scheduled to begin flight tests in the spring of 1999.

For access/accreditation information, contact the NASA Headquarters Newsroom at 202/358-1600. News media at NASA field centers interested in participating in the session will be connected by telephone. Media interested in participating from NASA centers should contact the appropriate center newsrooms for details no later than Friday, November 8.

- end -

VideoAdvisory

National Aeronautics and
Space Administration

Washington, D.C. 20546
(202) 358-1600

For Release
November 6, 1996

Deanna Corridon
Headquarters, Washington, DC
(Phone: 202/358-1733)

VIDEO ADVISORY: V96-136

ROCK OF AGES ON NTV WEDNESDAY

An international team of scientists whose research is primarily funded by NASA and the National Science Foundation have discovered that life on Earth began at least 400 million years earlier than previous evidence suggested. The evidence was derived from the analysis of a rock formation discovered on Akila Island in Greenland that is at least 3.85 billion years old. Included in today's video file package will be b-roll of researchers examining the rock formation. Replaying on NTV will be animation depicting the Mars Global Surveyor after lift-off, through the deployment of its solar panels.

ITEM #1: ROCK OF AGES
Scientists examine ancient rock formation. *For more information contact Donald Savage at (202) 358-1547.*

ITEM #2: INTERVIEW - STEPHAN J. MOJZSIS, GRADUATE STUDENT, SCRIPPS OCEANOGRAPHIC INSTITUTE

ITEM #3: INTERVIEW - GUSTAF ARRHENIUS, PROFESSOR OF OCEANOGRAPHY, UNIVERSITY OF CALIFORNIA SAN DIEGO

ITEM #4: REPLAY - MARS GLOBAL SURVEYOR ANIMATION

Video news files air noon, 3, 6, 9 p.m. and midnight EDT.

NASA Television is broadcast on Spacenet 2, transponder 5, channel 9, C-Band, located at 69 degrees West longitude, with horizontal polarization. Frequency is on 3880.0 megahertz, with audio on 6.8 megahertz.

- end -

News Release

National Aeronautics and
Space Administration

Washington, DC 20546
(202) 358-1600

For Release

Ed Campion
Headquarters, Washington, DC
(Phone: 202/358-1778)

November 6, 1996

Eileen Hawley
Johnson Space Center, Houston, TX
(Phone: 713/483-5111)

RELEASE: 96-229

VETERAN SHUTTLE COMMANDER RETIRES

NASA astronaut Robert L. "Hoot" Gibson, (Captain, USN Ret.) will leave NASA in mid-November to pursue private business interests.

"We will miss Hoot's leadership capabilities and skills," said David Leestma, director of Flight Crew Operations. "He has played a key role in the astronaut corps and Shuttle program, and we wish him the best in his future endeavors."

Selected as an astronaut in 1978, Gibson first flew as pilot on STS-41B in 1984. He subsequently commanded four shuttle missions, STS-61C in January 1986, STS-27 in December 1988, STS-47 in September 1992 and the first Shuttle/Mir docking mission, STS-71, in June-July 1995.

"While I am looking forward to new challenges and opportunities, I will certainly miss being a part of the NASA team," Gibson said. "I am grateful for the opportunity to work with so many talented and dedicated people over the past 18 years."

For complete biographical information on Gibson and other astronauts, see the NASA Internet biography home page at URL: http://www.jsc.nasa.gov/Bios/

- end -

News Release

National Aeronautics and
Space Administration
Washington, DC 20546
(202) 358-1600

For Release
November 6, 1996

Donald Savage
NASA Headquarters, Washington, DC
(Phone: 202/358-1547)

Stuart Wolpert
UCLA, Department of Earth and Space Sciences
(Phone: 310/206-0511

Cindy Clark
Scripps Oceanographic Institute, San Diego, CA
(Phone: 619/534-1294)

Cheryl Dybas
National Science Foundation, Arlington, VA
(Phone: 703/306-1070)

RELEASE: 96-230

LIFE ON EARTH BEGAN AT LEAST 3.85 BILLION YEARS AGO, 400 MILLION YEARS EARLIER THAN PREVIOUSLY THOUGHT, SCIENTISTS SAY

Life on Earth began at least 3.85 billion years ago, an international team of scientists reports in the cover story of the Nov. 7 issue of the journal Nature.

The scientists, from UC San Diego's Scripps Institution of Oceanography, UCLA's Department of Earth and Space Sciences, the Australian National University and England's Oxford Brookes University, present evidence that pushes back the emergence of life on Earth by 400 million years.

The evidence comes from a rock formation discovered on Akilia Island in southern West Greenland that is at least 3.85 billion years old. The research -- funded primarily by the National Science Foundation and NASA -- has provocative implications.

"Our evidence establishes beyond reasonable doubt that life emerged on Earth at least 3.85 billion years ago, and this is not the end of the story," said Stephen J. Mojzsis, a graduate student in geochemistry at Scripps and the lead author of the article. "We may well find that life existed even earlier."

"We look in rocks like this for chemical suggestions and isotopic evidence, and we found both," said T. Mark Harrison, professor of geochemistry at UCLA and director of UCLA's W.M. Keck Foundation Center for Isotope Geochemistry. "It would be wonderful to see a head and toes, and while we don't have those, we have found very strong isotopic evidence for ancient life."

-more-

"But in the cases of Earth's most ancient rocks and minerals, we are actually better off relying on this type of isotopic evidence -- chemofossils -- rather than on the shape of life-like objects with which nature has often been deceiving the unwary," said Gustaf Arrhenius, professor of oceanography at UC San Diego and principal investigator for the research project.

The carbon inclusions in the rock were analyzed with UCLA's high-resolution ion microprobe -- an instrument that enables scientists to learn the exact composition of samples -- which Mojzsis described as the "world's best instrument" for this research. The microprobe shoots a beam of ions -- charged atoms -- at a sample, releasing from the sample its own ions that are analyzed in a mass spectrometer. Scientists can aim the beam of ions at specific microscopic areas of a sample and analyze them.

The team of scientists, Mojzsis; Arrhenius, who is his research adviser; Harrison; Kevin McKeegan, a researcher in UCLA's Department of Earth and Space Sciences; Allen Nutman, a research fellow at the Australian National University; and Clark Friend, a geologist at Oxford Brookes University, presents the following evidence for the ancient life:

- Most importantly, a high ratio of one form -- an isotope -- of carbon to another, which provides a "signature of life," Mojzsis said. The carbon aggregates in the rock have a ratio of about 100 to one of 12C (the most common isotope form of carbon, containing six protons and six neutrons) to 13C (a rarer isotopic form of carbon, containing six protons and seven neutrons). "The light carbon, 12C, is more than three percent more abundant than scientists would expect to find if life were not present, and three percent is, in this case, a very large amount," Arrhenius said;

- The inclusion of the carbon in a phosphate mineral called apatite, which is also the material of which bones and teeth are made. Apatite is often formed by microorganics, but it can also be formed inorganically. The association of the carbon with the apatite is "suggestive, and not surprising, but does not in itself establish life," Arrhenius said.

The form of life discovered was probably a simple micro-organism, although its actual shape or nature cannot be ascertained, Mojzsis said, because heat and pressure over time have destroyed any original physical structure of the organisms.

Harrison, who directs UCLA's ion microprobe, said of the research, "This was a scientific problem that was waiting for a new generation microprobe of this resolution. The individual samples are very small, and no other instrument would have been sensitive enough to reveal precisely the isotopic composition and location of the carbon inclusions in the rock."

It is unknown when life first appeared on Earth, which is approximately 4.5 billion years old. The previous earliest evidence for life was presented by UCLA paleobiologist J. William Schopf, who showed that on the basis of bacteria-like fossils, primitive life, much like modern "pond scum," existed on Earth 3.46 billion years ago. "The evolution of lifeless matter into primitive life forms, and their organization into the complex structure of cells like those found by Schopf, represent an enormous development in the earliest history before the deposition of the Akilia sediments," Arrhenius said.

The residues of ancient life that the scientists have discovered existed prior to the end of the "late heavy bombardment" of the Moon by large objects, which ended approximately 3.8 billion years ago, Harrison said. The implication, he added, is that the often assumed simultaneous bombardment of Earth did not lead to the extinction of life.

This research shows that life on Earth began during the first approximately 700 million years after the formation of the planet, placing an upper limit on the time needed for the creation of life on Earth, or on the time period available for it to arrive here from elsewhere, the scientists said.

"Life is tenacious, and it completely permeates the surface layer of the planet," Mojzsis said. "We find life beneath the deepest ocean, on the highest mountain, in the driest desert and the coldest glacier, and deep down in the crustal rocks and sediments. Not knowing what conditions are needed for the emergence of life, it is only possible to speculate about its existence elsewhere in the universe. An important contribution to the solution of this problem could come from exploration of the surface of Mars for traces there of extinct life."

An equally interesting question, the scientists agreed, that is currently studied in laboratories on Earth is how life originally could have arisen from lifeless molecules, and evolved into the already sophisticated isotope fractioning life forms recorded in the Akilia rocks.

Mojzsis' research is supported by a graduate fellowship from the NASA Specialized Center for Organized Research and Training (NSCORT) in Exobiology, which is located at Scripps Institution of Oceanography. Arrhenius has received support from NASA's Exobiology Office, from NASA NSCORT and from the NSF (Earth Sciences). Harrison's ion microprobe research is supported by a grant from the NSF's Instrument and Facilities Program. Nutman's research has been supported by the Carlsberg Foundation and the Danish Natural Science Research Council. Friend's research has been supported by the Oxford Brookes University and the Royal Society of London.

- end -

Contract Announcement

National Aeronautics and
Space Administration

Washington, DC 20546
(202) 358-1600

Beth Schmid
Headquarters, Washington, DC
(Phone: 202/358-1600)

For Release
November 7, 1996

Jim Sahli
Goddard Space Flight Center, Greenbelt, MD
(Phone: 301/286-0697)

RELEASE: C96-m

GODDARD SELECTS TEN COMPANIES TO PROVIDE COMPUTER SERVICES

NASA's Goddard Space Flight Center, Greenbelt, MD, has selected ten companies to provide Unix-based workstations and supporting equipment under the Scientific and Engineering Workstation Procurement II project (SEWP II). This $1.8 billion procurement provides for the Agency-wide delivery, installation, maintenance, and support services of eight classes of scientific and engineering Unix-based computer workstations and four supporting equipment classes.

Of the selections made within the twelve categories, fourteen firm-fixed-price indefinite delivery/indefinite quantity contracts will be awarded to support a wide variety of programs and experiments for NASA centers over four years. In addition, the contracts will be made available to other Federal agencies to satisfy requirements for scientific and engineering workstations. Goddard will serve as the focal point for the execution and administration of the contracts.

The selected vendors for each of the workstation and supporting equipment classes are as follows:

Electrical Computer Aided Design (CAD) - Sun Microsystems Federal Inc., Vienna,VA
Mechanical CAD - Hewlett Packard, Rockville, MD
Data Server - International Business Machines, Bethesda, MD
3-D Graphics - Silicon Graphics Incorporated, Silver Spring, MD
Software Development - Sun Microsystems Federal Inc., Vienna, VA
General Purpose - Digital Equipment Corp., Greenbelt, MD, Compaq Computer Corp., Houston; Unisys Corporation, Hanover, MD
Geographic Information System - Hewlett Packard, Rockville, MD
Computer Support Devices - Government Technology Services, Inc., Chantilly, VA

-more-

Networking - Unisys Corporation, Hanover, MD
Administrative File Server - Government Technology Services, Inc., Chantilly, VA
Storage Devices - Sylvest Management Systems, Landover, MD
Computer Server - Cray Research, Inc., Eagan, MN

Contract award is anticipated for mid-November 1996 following successful completion and implementation of electronic data interchange processes between Goddard and the selected vendors.

-end-

News Release

National Aeronautics and
Space Administration
Washington, DC 20546
(202) 358-1600

For Release

Jim Cast
Headquarters, Washington, DC
(Phone: 202/358-1779)

November 7, 1996

RELEASE: 96-228

NASA ANNOUNCES 1995 STTR PHASE II SELECTIONS

NASA's Office of Aeronautics has selected fourteen research proposals for immediate negotiation of Phase II contracts in NASA's Small Business Technology Transfer (STTR) Pilot Program. The proposal selections are in support of the research topics included in the Agency's 1995 STTR solicitation.

A total of twenty-six Phase II proposals were submitted by contractors completing Phase I projects. All proposals were peer reviewed for both technical merit and commercial potential. Selections were based on the following factors: scientific and technical merit, results of Phase I, evidence of commercial potential, and capability of the small business concern.

The objective of a Phase I project is to determine the feasibility of the proposed research. Phase II continues the research of the most promising Phase I projects. Each of the fourteen selected Phase II proposals will be awarded a fixed-price contract valued up to $500,000 with a two-year performance period.

The STTR Program is similar to the Small Business Innovation Research (SBIR) Program but varies by requiring a small business concern to conduct cooperative research and development by partnering with a research institution. At least 40% of the work must be performed by the small business concern, and at least 30% of the work must be performed by the research institute.

-end-

NOTE TO EDITORS: A listing of the selected proposals is available on the Internet at the following URL:

http://nctn.hq.nasa.gov/nctn/SBIR/SBIR.html

National Aeronautics and Space Administration
Small Business Technology Transfer (STTR) Pilot Program

95-1 Phase II
November 7, 1996

Alabama

AI SIGNAL RESEARCH INC
3322 SOUTH MEMORIAL PKWY SUITE 67
HUNTSVILLE, AL 35801
JEN-YI JONG *205-880-1968*
GEORGIA INSTITUTE OF TECHNOLOGY
SCHOOL OF AEROSPACE ENGINEERING
ATLANTA, GA 30332-0150
95-1-04-950010 MSFC
ACOUSTIC EMISSION BEARING FAULT DIAGNOSTICS SYSTEM

PHYSITRON INC
3304A WESTMILL DR
HUNTSVILLE, AL 35805
JOHN M. MCSWAIN *205-534-4844*
UNIV OF ALABAMA HUNTSVILLE
HUNSTVILLE, AL 35899
95-1-05-950024 GSFC
MISSION-INTELLIGENT VISUALIZATION TOOLS AND DATA SERVICES

California

OPTO-KNOWLEDGE SYSTEMS INC
1737 THIRD ST
MANHATTAN BEACH, CA 90266-6308
LINDA PAPERMASTER *310-372-6665*
JPL/CALIFORNIA INSTITUTE OF TECHNOLOGY
4800 OAK GROVE DR
PASADENA, CA 91109
95-1-05-950003 GSFC
NOVEL NEURAL NETWORK TECHNOLOGY FOR VERY FAST ANALYSIS OF HYPERSPECTRAL IMAGERY

ACTA INC
23430 HAWTHORNE BLVD SUITE 300
TORRANCE, CA 90505-4723
JAMES M. HUDSON 310-378-6254
UNIV OF HOUSTON DEPT OF MECH ENG
4800 CALHOUN RD
HOUSTON, TX 77204-4792
95-1-02-950039 LaRC
INTEGRATED SOFTWARE FOR IMPROVING THE DESIGN AND PERFORMANCE OF ADVANCED AEROSPACE STRUCTURES

Connecticut

D-STAR ENGINEERING
5-B DAISY DR
SEYMOUR, CT 06483
S. PAUL DEV *203-881-0074*
SOUTHWEST RESEARCH INSTITUTE
6220 CULEBRA RD
SAN ANTONIO, TX 78228
95-1-01-950048 LeRC
JET-A/DIESEL-COMPATIBLE LIGHT-WEIGHT AIRCRAFT ENGINE USING TWO-STROKE CYCLE, CERAMIC INSERTS AND NEW DESIGN FEATURES

D-STAR ENGINEERING
5-B DAISY DR
SEYMOUR, CT 06483
S. PAUL DEV *203-881-0074*
SOUTHWEST RESEARCH INSTITUTE
6220 CULEBRA RD
SAN ANTONIO, TX 78228
95-1-01-950049 LeRC
LIGHT-WEIGHT LOW-COST FUEL EFFICIENT LOW-EMISSIONS AIRCRAFT ENGINE USING 2-STROKE CYCLE, IN-CYLINDER INJECTION AND NEW DESIGN FEATURES

District of Columbia

JACKSON & TULL
2705 BLADENSBURG RD NE
WASHINGTON, DC 20018
KNOX W. TULL, JR. *202-333-9100*
WOODS HOLE OCEANOGRAPHIC INSTITUTION
WOODS HOLE, MA 02543
95-1-05-950073 GSFC
MODULAR OFFSHORE DATA ACQUISITION SYSTEM

Florida

MOD WORKS INC
8250 SKYLANE WAY
PUNTA GORDA, FL 33982
TIM COONS 813-637-6770
FLORIDA INSTITUTE OF TECHNOLOGY
150 WEST UNIVERSITY BLVD
MELBOURNE, FL 32901-6988
95-1-01-950061 LaRC
OPTIMIZATION OF GENERAL AVIATION ENGINE MONITORING, FLIGHT, AND COCKPIT SYSTEMS BY PRACTICAL APPLICATION OF HUMAN FACTORS ENGINEERING TECHNOLOGIES

National Aeronautics and Space Administration
Small Business Technology Transfer (STTR) Pilot Program

95-1 Phase II
November 7, 1996

Massachusetts

AIRBORNE RESEARCH ASSOC
46 KENDAL COMMON RD
WESTON, MA 02193
RALPH J. MARKSON *617-899-1834*
MIT/LINCOLN LAB
244 WOOD ST
LEXINGTON, MA 02173-9108
95-1-01-950002 LaRC
ATLM: AIRCRAFT TOTAL LIGHTNING MAPPER

Michigan

ADVANCED MODULAR POWER SYSTEMS INC
4667 FREEDOM DR
ANN ARBOR, MI 48108-9784
ROBERT K. SIEVERS *313-677-3027*
UNIV OF MICHIGAN
303 SOUTH STATE ST
ANN ARBOR, MI 48109-1274
95-1-03-950041 LeRC
INEXPENSIVE POLYMER PRECURSOR BETA-ALUMINA ELECTROLYTES FOR AMTEC POWER SYSTEMS AND NA/S BATTERIES

New York

LASER PHOTONICS TECHNOLOGY INC
1576 SWEET HOME RD
AMHERST, NY 14228
MARTIN CASSTEVENS *716-688-8251*
CLARK ATLANTA UNIV
NASA HIPPAC CENTER
ATLANTA, GA 30314
95-1-02-950060 LaRC
OPTICAL INFORMATION STORAGE DEVICES MADE FROM HIGHLY STABLE POLYIMIDE BASED PHOTOREFRACTIVE POLYMERS

Utah

LONE PEAK ENGINEERING INC
12660 SOUTH FORT ST
DRAPER, UT 84020
E.A. GRIFFIN *801-553-1732*
AMES LABORATORY
IOWA STATE UNIV
AMES, IA 50011-3020
95-1-04-950037 MSFC
DESKTOP MANUFACTURING OF CERAMIC COMPONENTS FOR SPACE APPLICATIONS

Washington

VISION MICRO DESIGN INC
5501 EAST RD
BELLINGHAM, WA 98226
LANCE G. TURK *216-398-1833*
UNIV OF TEXAS AT AUSTIN COMP ENG RES CTR
ENS 433A MC78800
AUSTIN, TX 78712
95-1-01-950046 LaRC
A REDUNDANT LOW-COST SOLID STATE INERTIAL REFERENCE SYSTEM WITH GPS AIDING FOR GENERAL AVIATION

Wisconsin

STRESS PHOTONICS INC
565 SCIENCE DR
MADISON, WI 53711
BRADLEY R. BOYCE *608-233-2878*
COL OF WILLIAM AND MARY
APPLIED SCIENCE PROGRAM P.O. BOX 8795
WILLIAMSBURG, VA 23187-8795
95-1-02-950020 LaRC
A STRESS IMAGER INTEGRATING THERMOELASTIC AND PHOTOELASTIC STRESS ANALYSIS

News Release

National Aeronautics and
Space Administration
Washington, DC 20546
(202) 358-1600

David E. Steitz
Headquarters, Washington, DC
(Phone: 202/358-1730)

For Release
November 7, 1996

Jim Sahli
Goddard Space Flight Center, Greenbelt, MD
(Phone: 301/286-0697)

RELEASE: 96-231

SAC-B/HETE SPACECRAFT NO LONGER OPERATIONAL

Spacecraft managers at the Goddard Space Flight Center, Greenbelt, MD, believe that the SAC-B (Scientific Applications Satellite-B) spacecraft is no longer operating due to the loss of onboard battery power. Project officials said the spacecraft battery lost power early on Tuesday, Nov. 5.

None of the five SAC-B instruments have been operating since the battery failure. HETE (High Energy Transient Experiment) project officials at the Massachusetts Institute of Technology confirmed that because the HETE spacecraft was not separated from the Pegasus XL third stage, HETE was not able to deploy its solar arrays. HETE is designed to remain dormant until the solar arrays detect sunlight, an event unlikely to occur since HETE remains sealed in the interior of a dual payload support structure.

Officials said the SAC-B solar arrays did not deploy automatically after launch since the Pegasus XL third stage remained attached to the spacecraft. The solar arrays were deployed by commands issued during the spacecraft's first pass over the Wallops Operational Tracking Station, Wallops Island, VA, on Monday, Nov. 4. Ground tracking after launch showed the spacecraft tumbling. Due to the tumbling, combined with the shadowing of the Pegasus XL third stage, the SAC- B solar arrays were not able to generate enough power to keep the satellite's batteries charged.

By early Nov. 5 morning during a spacecraft pass over the Wallops station, there were no signals detected from SAC-B. The SAC-B attitude control system had been turned on in an attempt to stabilize the spacecraft, but with the additional mass of the Pegasus XL third stage, the batteries were discharged before control could be established. Although there is the possibility that SAC-B could be reactivated if the current tumbling of the spacecraft were to stop, that possibility is considered remote by NASA managers.

-more-

HETE officials said that the spacecraft was powered on after launch because of a previously programmed timer. Signals were able to penetrate the Pegasus canister and were detected during a pass at 7 a.m. on Nov. 5 by a NOAA satellite receiving station at Wallops. In a subsequent pass, signals were present but weak. Project officials said on the next pass, no signals were detected. Managers said that spacecraft batteries were probably depleted at that time.

The Pegasus launch occurred Nov. 4 at approximately 12:09 p.m. EST offshore from NASA's Wallops Flight Facility, Wallops Island, VA. The Pegasus vehicle achieved the desired orbit of 265 nautical miles by 297 nautical miles at an inclination of 38 degrees. Analysis of the launch shows that the Orbital Sciences Corporation's Pegasus XL third stage failed to separate from the satellites.

-end-

News Release

National Aeronautics and
Space Administration

Washington, DC 20546
(202) 358-1600

For Release

November 12, 1996

Ed Campion
Headquarters, Washington, DC
(Phone: 202/358-1778)

Rob Navias/James Hartsfield
Johnson Space Center, Houston, TX
(Phone: 713/483-5111)

Lisa Malone/Bruce Buckingham
Kennedy Space Center, FL
(Phone: 407/867-2468)

RELEASE: 96-232

NASA CLEARS COLUMBIA FOR FLIGHT -- LAUNCH SET FOR NOV. 15

After completion of a follow-up flight readiness meeting today, NASA managers cleared Space Shuttle Columbia for launch on STS-80 and set November 15 as the official launch date. The STS-80 launch was originally planned for earlier this month, but was delayed to allow engineers additional time to complete their testing, analysis and evaluation of nozzle erosion that was found on one Reusable Solid Rocket Motor from Atlantis' September flight on STS-79.

Engineers have concluded that the most likely cause for the unusual erosion pattern seen on the STS-79 booster was due to a pocketing erosion effect triggered by slight ply distortions in the ablative material of the nozzle throat ring and normal variations in other material properties.

The manufacture of the throat ring is accomplished by wrapping the ablative material in a criss-cross fashion and curing at elevated temperatures and pressures. Engineers believe that in the curing process, the material near the surface of the insulation shifts slightly, thus creating distortions near the surface.

During the motor operation when hot gas is flowing, the distortion can significantly raise stresses in the material that could result in a pocketing effect that causes the ablative material to wear away unevenly. Analysis shows that even with the ply distortion condition in the worst possible configuration, significant safety margins are maintained.

-more-

The launch window on Nov. 15 opens at 2:50 p.m. EST and extends for 2 1/2 hours. The STS-80 mission has a planned duration of 16 days. An on-time launch and nominal mission would result in a landing for Columbia at the Kennedy Space Center, FL, on Sunday, Dec. 1 around 7:30 a.m. EST. The Nov. 15 launch date is contingent upon a commercial Atlas rocket launch planned for Wednesday, Nov. 13. If the Atlas launch is delayed one day for some reason, the Shuttle launch would move one day later due to Air Force range safety support logistics.

"I am very proud of this Shuttle team and their efforts in reviewing the nozzle issue," Space Shuttle Program Manager Tommy Holloway said. "I believe we now have a good understanding of the phenomenon seen on the STS-79 booster and are ready for Columbia's launch. The time we took to make sure all of the data was properly reviewed and analyzed once again demonstrates that safety remains the number one priority of this program."

The STS-80 mission is NASA's final Shuttle flight scheduled for 1996. During the mission, Columbia's astronauts, led by Commander Ken Cockrell, will deploy and retrieve two science satellites and two of the astronauts will conduct a pair of space walks to fine-tune techniques which will be used during the assembly of the International Space Station.

-end-

News Release

National Aeronautics and
Space Administration

Washington, DC 20546
(202) 358-1600

Don Nolan-Proxmire
Headquarters, Washington, DC
(Phone: 202/358-1983)

Keith Henry
Langley Research Center, Hampton, VA
(Phone: 804/864-6120)

For Release
Nov. 12, 1996

RELEASE: 96-233

AIRCRAFT FLIGHT CONTROL SYSTEM WINS "BEST OF WHAT'S NEW"

An experimental aircraft flight control system that learns as it flies has been honored as one of the best technology developments of 1996.

Developed for NASA and the U.S. Air Force, the computerized flight control system has been installed on an 8-foot-4-inch remotely piloted aircraft called"LoFLYTE" being prepared for flight demonstrations this month. The jet-powered aircraft was developed by Accurate Automation Corp., Chattanooga, TN, under the Small Business Innovation Research program.

The LoFLYTE hypersonic waverider aircraft was named one of the 100 "Best of What's New" in the annual Popular Science magazine competition. Winners were announced today at an exhibition in New York City's Central Park and will be featured in the magazine's December issue.

The experimental LoFLYTE aircraft will be used to explore new flight control techniques involving neural networks, which allow the aircraft control system to learn by mimicking the remotely-sited pilot. Technologies being implemented in the LoFLYTE program could eventually find their way into commercial, general aviation and military aircraft. Flights are taking place at Edwards,CA, with the support from NASA's Dryden Flight Research Center.

The model is a Mach 5 waverider concept, a futuristic hypersonic aircraft configuration that could cruise on top of its own shockwave if powered to reach hypersonic speeds. LoFLYTE represents the first known flying waverider vehicle configuration. In the current flight tests it is powered by a small-scale jet engine and will reach subsonic speeds to explore takeoff and landing control issues.

-more-

The aircraft has been designed to demonstrate that neural network flight controls are superior to conventional flight controls. Neural networks are computer systems that actually learn by doing. The computer network consists of many interconnected control systems, or nodes, similar to neurons in the brain. Each node assigns a value to the input from each of its counterparts. As these values are changed, the network can adjust the way it responds.

The LoFLYTE aircraft's flight controller consists of a network of multiple-instruction, multiple-data neural chips. The network will be able to continually alter the aircraft's control laws in order to optimize flight performance and take the pilot's responses into consideration. Over time, the neural network system could be trained to control the aircraft. The use of neural networks in flight could help pilots of future aircraft to fly in quick-decision situations and help damaged aircraft land safely even when controls are partially disabled.

The waverider was chosen as the testbed for the neural networks because the configuration has an inherently high lift-to-drag ratio at hypersonic speeds. If neural networks can control this "worst-case scenario" configuration, then they should be able to handle virtually any conventional configuration, project officials say.

Individuals and organizations cited for their work with LoFLYTE are James L. Hunt, NASA Langley Research Center, Hampton, VA; Dr. Kervyn Mach, Air Force Wright Laboratory Dayton, OH; and Bob Pap, Accurate Automation.

- end -

VideoAdvisory

National Aeronautics and
Space Administration

Washington, D.C. 20546
(202) 358-1600

For Release
November 13, 1996

Debbie Rivera
Headquarters, Washington, DC
(Phone: 202/358-1743)

VIDEO ADVISORY: V96-137

PARTNERS IN RESEARCH ON NTV WEDNESDAY

NASA and FAA will sign an agreement that initiates joint research and development activities to improve the efficiency of the nation's airspace system. Also on NTV will be images taken by NASA's Airborne Visible and Infra-Red Imaging Spectrometer (AVIRIS) of the damages to the Santa Monica Mountains caused by the Calabasa/Malibu fire. NTV also will air LoFLYTE footage and STS-80 animation and interviews.

ITEM #1: Partners in Research
NASA and FAA sign a joint NASA/FAA Integrated Plan for Air Traffic Management Research and Technology on November 13.

ITEM #2: AVIRIS/Malibu Fire
Images taken by NASA's Airborne Visible and Infra-Red Imaging Spectrometer of the Calabasas/Malibu fire.

ITEM #3a: B-Roll of AVIRIS
Footage of the AVIRIS instrument being installed on NASA's ER-2 airplane.

ITEM #3b: INTERVIEW-Gregg Sawyze, U.S. Geological Survey. Swayze

ITEM #3c: INTERVIEW-Robert Green, Jet Propulsion Laboratory.

ITEM #4: LoFLYTE is the "Best of What's New"
An experimental aircraft flight control system that learns as it flies.

ITEM #5: STS-80 Animation
Animation depicting the STS-80 mission including the two planned Extravehicular Activities.

ITEM #6: STS-80 Crew Training
The STS-80 crew prepares for their upcoming mission.

ITEM #7: ORFEUS-SPAS
Free-flying experiment payload a board Columbia which will study the origin and makeup of stars. B-roll from STS-51.

ITEM #7a: INTERVIEW-Dr. Ron Polidan, NASA ORFEUS-SPAS 1 Mission Specialist

ITEM #8: Hands-on Space Experiment
The Space Experiment Module is an education initiative that provides increased access to space.

ITEM #8a: INTERVIEW-Stephanie Kallab, Student@Hampton Elem., Lutherville, MD

ITEM #8b: INTERVIEW-Mary Davem-Fitzsimmons, Student@Hampron Elem., Lutherville, MD

ITEM #8c: INTERVIEW-Dr. Ruthan Lewis, SEM Mission Manager

ITEM #9-13: INTERVIEWS of STS-80 Crew

Video news files air noon, 3, 6, 9 p.m. and midnight EDT.

NASA Television is broadcast on Spacenet 2, transponder 5, channel 9, C-Band, located at 69 degrees West longitude, with horizontal polarization. Frequency is on 3880.0 megahertz, with audio on 6.8 megahertz.

-end-

News Release

National Aeronautics and
Space Administration
Washington, DC 20546
(202) 358-1600

For Release

Douglas Isbell
Headquarters, Washington, DC
(Phone: 202/358-1753)

November 13, 1996

Mary Hardin
Jet Propulsion Laboratory, Pasadena, CA
(Phone: 818/354-5011)

RELEASE: 96-234

NASA AIRBORNE SENSOR AIDS STUDIES OF MALIBU BRUSH FIRES BEFORE AND AFTER

Vegetation maps of the Santa Monica Mountains produced from a NASA airborne sensor taken before and after the 1996 Calabasas/Malibu brush fire are helping scientists improve predictions of fire hazards in the area and may one day reduce the risk of catastrophic fires.

The maps of chaparral vegetation were created with advanced measurements from NASA's Airborne Visible and Infra-Red Imaging Spectrometer (AVIRIS) which was developed and is managed by the Jet Propulsion Laboratory (JPL), Pasadena, CA. The images were taken on Oct. 17 and Oct. 23. The fire started in Calabasas on Oct. 21 and eventually burned more than 12,000 acres.

"With AVIRIS, we've been working on techniques to use the spectral information measured by the instrument to map different vegetation communities in the Santa Monica Mountains," said Dr. Dar Roberts of the University of California, Santa Barbara. "This information should improve our ability to assess fire risk and predict fire behavior, and perhaps could provide more effective information for planners and agencies concerned with fire prevention. We can also predict moisture content in the foliage which helps us understand how different areas will burn."

The AVIRIS instrument flies aboard a NASA ER-2 airplane. While being carried 12 miles above sea level at a speed of 450 miles per hour, the instrument can take approximately 7,000 measurements per second. Earth scientists use AVIRIS to conduct research and applications across a range of scientific disciplines, including ecology, geology, mineral hazards, snow and ice, coastal and inland waters, and wild fires.

-more-

"This technique of imaging spectroscopy implemented with AVIRIS represents a fundamental new way of studying the Earth. We are measuring in detail how light is absorbed or reflected by various materials on the Earth's surface. In the case of the Santa Monica Mountains, we are measuring the presence of molecules such as chlorophyll, leaf water and cellulose. By measuring these molecules we can map different vegetation types, vegetation moisture and the overall amount of vegetation, all of which play a role in predicting wild fire hazards," said Robert Green, the AVIRIS experiment scientist at JPL.

"The value in repeated flights is that if we have sufficient information over time, we can presumably build up a very complete understanding of the links between vegetation patterns and fire behavior," said Dr. John Gamon, associate professor of Biology and Microbiology at California State University, Los Angeles. "This issue will not go away with a single fire, but will come back repeatedly to haunt us, as demonstrated by the most recent burn. It is important to remember that fire is an integral part of the southern California ecosystem, and is here to stay."

Scientists and fire agencies will use the AVIRIS vegetation maps and measurements they have taken on the ground to produce computer models to forecast how and where a fire would burn in the area. Such information could assist firefighters to prepare for future fires that reach across both wildland and urban areas.

"An accurate fire model could be very useful in allowing us to strategize by staying one or two steps ahead of an actual fire as it burns, allowing more efficient deployment of resources during an emergency. The AVIRIS information can tell us what kinds of fuel are present and that could help us plan safe and effective 'prescribed' burns. If we could burn the vegetation more frequently and in small patches, then it would reduce the risk of catastrophic fires," said Herb Spitzer, assistant fire chief at the Forestry Division of the Los Angeles County Fire Department.

The AVIRIS program is managed by JPL for NASA's Office of Mission to Planet Earth, Washington, DC. The Mission to Planet Earth is a long-term, coordinated program to study the Earth's air, water, land and life as a global environmental system.

A still color image to support this news release comparing vegetation coverage before and after the recent Santa Monica Mountain fires is available to news media by contacting the Headquarters Imaging Branch on 202/358-1900. The photo number is 96-HC-726.

-end-

News Release

National Aeronautics and
Space Administration

Washington, DC 20546
(202) 358-1600

For Release

Don Nolan-Proxmire
Headquarters, Washington, DC
(Phone: 202/358-1983)

November 13, 1996

Hank Price
FAA, Washington, DC
(Phone: 202/267-8521)

RELEASE: 96-235

NASA AND FAA JOIN IN AIR TRAFFIC MANAGEMENT RESEARCH

NASA Associate Administrator of Aeronautics, Dr. Robert Whitehead and George L. Donohue, the FAA's Associate Administrator for Research and Acquisitions, have agreed to a NASA/FAA Integrated Plan for Air Traffic Management Research and Technology that initiates research and development to improve service to the flying public.

Using the latest aerospace technology, NASA and FAA initiatives will improve the efficiency of our nation's airspace system. The initiative will be managed by a NASA/FAA Integrated Product Team that will address both near and long-term requirements, with initial emphasis on improvements that can be implemented within the next 10 years.

Specific areas for joint NASA/FAA activities will include, but will not be limited to:

- *Roles of flight crews and air traffic controllers*: More flexible flight operations may involve new roles for flight crews and air traffic controllers;

- *Integration of air traffic management, cockpit and fleet management:* Emerging technologies may permit closer integration of air traffic management, cockpit flight management, and operational control centers;

- *Cockpit situation awareness:* Technologies developed for the Traffic Alert and Collision Avoidance System (TCAS) and Automatic Dependent Surveillance Broadcast (ADS-B) offer new opportunities to improve cockpit situational awareness both on the airport surface and throughout airspace. Further development will increase flight crew participation in air traffic management decision-making;

-more-

- *Conflict detection and resolution:* Development of automation technologies and pilot/controller roles will enable users to accurately predict and resolve conflicts in an efficient and safe manner;

- *Flight restrictions:* Development of concepts, technologies, responsibilities, and procedures will minimize flight restrictions and maximize aircraft operations. Restrictions will continue to be imposed in high density areas;

- *Safety analysis:* The highest level of safety will be maintained. This will require analyses and simulations of safety hazards and development of tools for proactive detection of potentially hazardous situations;

- *All vehicle classes:* Flight operations will accommodate all users including but not limited to: transport, general aviation, rotorcraft and military aircraft. The system will accommodate each aircraft class while assuring that avionics requirements are cost effective and affordable;

- *Cost-benefit assessments:* Each step in the transition to more flexible flight operations will be substantiated by cost-benefit estimates. Projections will include impacts on both airspace users and air traffic management service providers.

-end-

News Release

National Aeronautics and
Space Administration

Washington, DC 20546
(202) 358-1600

Douglas Isbell
Headquarters, Washington, DC
(Phone: 202/358-1547)

Diane Ainsworth
Jet Propulsion Laboratory, Pasadena, CA
(Phone: 818/354-5011)

Diane Farrar
Ames Research Center, Mountain View, CA
(Phone: 415/604-3934)

For Release
November 13, 1996

RELEASE: 96-236

U.S. SOIL EXPERIMENT READY FOR LAUNCH ABOARD RUSSIA'S MARS `96

An instrument developed by the United States to measure the rate at which metals and organics corrode when exposed to the Martian environment is set for launch on Nov. 16, aboard two small landing stations on the Russian Mars '96 spacecraft.

The instrument, called the Mars Oxidant Experiment (MOx), was built at the Jet Propulsion Laboratory, Pasadena, CA, and is part of expanding U.S.-Russian cooperative efforts in space exploration.

Integration and final testing of the experiment on the Russian landers, also referred to as "small autonomous stations," was completed in late October at the Lavochkin Research and Production Association in Moscow, where the landers were designed and assembled, said Mark Herring, manager of the experiment at JPL. Two of the MOx instruments will fly on the mission, one on each of its two landers.

"This was a major engineering milestone for the U.S. experiment, culminating a development effort which started in 1992," Herring said. "In the course of integration on the landers, the U.S. team was required to take numerous trips to Helsinki and Moscow during the past year. We've gained valuable experience in what is involved with participation on an international mission."

-more-

The goal of the Mars '96 mission, set for launch aboard a Russian Proton launch vehicle from Baikonur Cosmodrome in Kazakstan, is to investigate the evolution of the Martian atmosphere, surface and interior by acquiring comprehensive measurements of the physical and chemical processes that occur on Mars today and those that may have taken place in the past.

The Mars Oxidant Experiment was developed to further investigate the presence of a strong oxidizing agent in the Martian soil that was inferred from the results of the biology experiments onboard the NASA Viking landers in the mid-1970s.

"We hope MOx will be able to tell us more about the surprisingly reactive properties of the Martian soil first detected by the Viking biology experiments and tell us if this reactivity is the cause of the complete absence of organics in the surface soil on Mars," said Dr. Christopher McKay, project scientist at NASA's Ames Research Center, Mountain View, CA.

"If we plan to search for the organic remnants of early life on Mars with future missions, then we have to understand the processes that are destroying these organics on the surface so that we know how deep we have to dig to reach unoxidized material," he added. "Viking, for instance, dug under a rock as deep as 4 inches (11 centimeters) but found only oxidized sand."

MOx uses chemical sensor technology originally developed at the Sandia National Laboratories, Albuquerque, NM. The instrument measures the oxidizing power of the Martian soil and atmosphere using a detector that monitors the change in reflectivity of a thin chemical film that is exposed to the Martian environment. The instrument, which weighs only three pounds, relies on its own power source -- a set of batteries -- to carry out the measurements.

Upon landing and deployment, MOx will operate autonomously, Herring said, according to a sequence that is programmed into its internal "read-only memory." While the mission is designed for a one-year lifetime, the operating life of MOx will be limited by its battery power source. Depending on the actual conditions on the surface of Mars, the operating time will be between 80 and 160 days.

"The instrument's sensor head is located on a petal of each of the two Russian small stations and is comprised of eight sensor cell assemblies, four of which are designed to contact the soil and four that will be exposed to the atmosphere," Herring said. "Within each cell assembly there are six active sensing sites and six reference sites, for a total of 96 sites.

"The active sites are protected by thin membranes of silicon nitride, which protect the sensor films from premature oxidation," he explained. "These membranes will be broken upon deployment, exposing the active films. The reference sites will remain permanently sealed. The sensor films have been selected to provide a broad range of chemical reactions. Each film type is duplicated in the air and soil cells."

Each of the 96 sensor sites is illuminated by two light-emitting diodes (LEDs), one operating at a wavelength of 590 nanometers and the other at 870 nanometers. The reflected signal will be measured by a silicon photodiode detector array. The sensor sites are coupled to the LEDs and the detector array through fiber optics.

A key feature of the experiment's data transmission sequencing is its ability to transmit data three times in order to reduce the data loss associated with various communications links. During the mission, the experiment team will distribute calibration data and mission data sets in which data from the instruments are merged with pertinent mission information.

Another U.S. instrument aboard Mars '96 is the Tissue-Equivalent Proportional Counter (TEPC). The TEPC instrument was developed at NASA's Johnson Space Flight Center, Houston, TX, to measure and store accumulated radiation spectra during the interplanetary cruise phase of the mission, as well as upon arrival in Mars orbit. This information should yield important insight into the space radiation environment and potential health risks involved in future human spaceflight.

Also aboard the spacecraft, attached to the MOx electronics case, is a CD-ROM, entitled "Visions of Mars," produced by The Planetary Society, Pasadena, CA, which is analogous to the records carried into space in 1977 by the twin Voyager spacecraft. The Mars `96 CD-ROM contains a collection of science fiction stories, sounds and artwork which chronicle humanity's fascination with Mars over four centuries of human history, 10 alphabets, 17 languages and 26 nations. The collection covers the earliest references to Mars in science fiction to present day stories about the red planet. A label pointing to the location of the CD-ROM is mounted on the outside of the spacecraft and includes a microdot of 100,000 names of Planetary Society members and instructions on how to use the CD-ROM.

If launched on time, Mars `96 will reach the orbit of Mars in mid-September 1997, at about the same time as NASA's Mars Global Surveyor (MGS) orbiter, which was launched successfully on Nov. 7. Mars '96 will deploy the two small stations and two penetrators on the surface of the planet shortly after arriving in Mars orbit. On-time launches of both spacecraft will enable MGS to assist in relaying data from the Russian small stations once the MGS primary mapping mission begins in March 1998.

-end-

News Release

National Aeronautics and
Space Administration

Washington, DC 20546
(202) 358-1600

Don Savage
Headquarters, Washington, DC
(Phone: 202/358-1547)

For Release
November 14, 1996

Tammy Jones
Goddard Space Flight Center, Greenbelt, MD
(Phone: 301/286-5566)

Ray Villard
Space Telescope Science Institute, Baltimore, MD
(Phone: 410/338-4514)

NOTE TO EDITORS: N96-76

NEW HUBBLE FINDINGS ON QUASARS PRESENTED AT BRIEFING NOV. 19

Dramatic Hubble Space Telescope images, which show that quasars live in a remarkable variety of galaxies, many of which are violently colliding, will be presented at a Space Science Update (SSU) on Tuesday, Nov. 19, at 9 a.m. EST. Noted astronomers John Bahcall and Mike Disney will present their significant new findings which suggest there may be a variety of mechanisms causing quasars -- the universe's most energetic objects -- to "turn on" and that quasars may be relatively short lived phenomena which many galaxies, including the Milky Way, experienced long ago.

The SAU will be carried live on NASA Television, with two-way question-and-answer capability for reporters covering the event from participating NASA Centers. NASA Television is carried on Spacenet-2, transponder 5, channel 9, at 69 degrees West longitude, frequency 3880.0 MHz, audio 6.8 Megahertz.

The 9 a.m. EST start time of the SSU is due to coverage of the STS-80 Space Shuttle mission, scheduled to launch at 2:53 p.m. EST Nov. 19. Live coverage and launch commentary on NASA TV will begin at the conclusion of the SSU at 10 a.m. EST. Audio of the SSU will be available on an audio circuit via telephone by calling 407/867-1260. During the SSU, pre-launch Shuttle activities will be carried live on the audio circuits via telephone on 407/867-1220 and 407/867-1240.

Panelists for the SSU will be:

Dr. John Bahcall, Institute for Advanced Study, Princeton, NJ
Dr. Mike Disney, University of Wales, Cardiff
Dr. Alex Filippenko, Center for Particle Physics, University of CA, Berkeley
Dr. Bruce Margon, University of Washington, Seattle
Dr. Stephen Maran, Goddard Space Flight Center, Greenbelt, MD, panel moderator.

- end -

REPRODUCED AT GOVT. EXPENSE

Video Advisory

National Aeronautics and
Space Administration

Washington, DC 20546
(202) 358-1600

For Release

Sonja A. Maclin
Headquarters, Washington, DC
(Phone: 202/358-1600)

November 14, 1996

VIDEO ADVISORY: V96-138

ACTIVE THRUST ON NTV

NASA's Dryden Flight Research Center, Edwards, CA recently achieved a significant milestone in advancing the capabilities of high-performance aircraft when a highly-modified F-15 aircraft employed thrust-vectoring of its engine exhausts at speed of almost Mach 2

ITEM #1: Active Thrust
Highly-modified F-15 aircraft employed thrust vectoring of its engine exhausts at speeds of almost Mach 2.
ITEM #2: Partners in Research
NASA and FAA sign a joint NASA/FAA Integrated Plan for Air Traffic Management Research and Technology on November 13.
ITEM #3: AVIRIS/Malibu Fire
Images taken by NASA's Airborne Visible and Infra-Red Imaging Spectrometer of the Calabasas/Malibu fire.
ITEM #3a: B-Roll of AVIRIS
Footage of the AVIRIS instrument being installed on NASA's ER-2 airplane.
ITEM #3b: INTERVIEW-Gregg Sawyze, U.S. Geological Survey
ITEM #3c: INTERVIEW-Robert Green, Jet Propulsion Laboratory
ITEM #4: LoFLYTE is the "Best of What's New"
An experimental aircraft flight control system that learns as it flies.
ITEM #5: STS-80 Animation
Animation depicting the STS-80 mission including the two planned Extravehicular Activities.
ITEM #6: STS-80 Crew Training
ITEM #7: STS-80 Calcium Experiment
Rats with high blood pressure flying on STS-80 may help scientists better understand how calcium helps maintain human health.
ITEM #7a: INTERVIEW-Dr. David McCarron, Professor of Medicine, Oregon Health Science University
ITEM #8: ORFEUS-SPAS
Free-flying experiment payload aboard Columbia which will study the origin and makeup of stars. B-roll from STS-51.
ITEM #8a: INTERVIEW-Dr. Ron Polidan, NASA ORFEUS-SPAS 1 Mission Specialist
ITEM #9: Hands-on Space Experiment
The Space Experiment Module is an education initiative that provides increased access to space.
ITEM #9a: INTERVIEW-Stephanie Kallab, Student@Hampton Elem., Lutherville, MD
ITEM #9b: INTERVIEW-Mary Davem-Fitzsimmons, Student@Hampron Elem., Lutherville, MD
ITEM #9c: INTERVIEW-Dr. Ruthan Lewis, SEM Mission Manager
ITEM #10-14: INTERVIEWS of STS-80 Crew

Video news files air noon, 3, 6, 9 p.m. and midnight EDT.

NASA Television is broadcast on Spacenet 2, transponder 5, channel 9, C-Band, located at 69 degrees West longitude, with horizontal polarization. Frequency is on 3880.0 megahertz, with audio on 6.8 megahertz.

- end -

News Release

National Aeronautics and
Space Administration

Washington, DC 20546
(202) 358-1600

For Release

November 14, 1996

Michael Braukus
Headquarters, Washington, DC
(Phone: 202/358-1979)

Ann Hutchison
Ames Research Center, Mountain View, CA
(Phone: 415/604-4968)

RELEASE: 96-237

SHUTTLE EXPERIMENT TO STUDY HIGH BLOOD PRESSURE

Rats with high blood pressure flying on the next Space Shuttle mission, STS-80, may help scientists better understand how calcium helps maintain human health.

An experiment by Drs. David McCarron and Daniel Hatton, hypertension specialists from the Oregon Health Sciences University in Portland, will examine calcium's role in blood pressure regulation. Calcium has long been recognized as a critical mineral in the normal development and function of bone and muscle.

"A large body of evidence indicates that problems in the way the body processes calcium also can lead to hypertension, or high blood pressure," Hatton said. "This flight experiment will help us clarify the role calcium levels play in this condition."

Hypertension affects over 50 million Americans and contributes to heart attack, stroke and kidney disease. It costs the nation's health care system billions of dollars annually, McCarron said. Dietary calcium appears to have its greatest effect on blood pressure when calcium demands on the body are highest.

McCarron and Hatton were among the first to propose that adequate dietary calcium is essential for normal cardiovascular function. They have tested their hypothesis in studies with humans and rats, with both normal and elevated blood pressures. The model for their studies is known as the Spontaneously Hypertensive Rat, which is genetically predisposed to calcium-related high blood pressure. It is thought that space flight causes a decrease in intestinal absorption of dietary calcium. Study of this animal model will enable the investigators to determine how the changes occurring in dietary calcium absorption affect blood pressure control.

-more-

NASA is interested in how changes in gravity affect the metabolism of calcium, since loss of bone mass during space flight may cause osteoporosis in astronauts earlier than in people on Earth. Because bones, which support the body against gravity's pull, are not stressed in space, they shed calcium into the blood and then out of the body. The process begins immediately upon leaving Earth's gravity and appears to continue unabated for the entire time in microgravity. After just a few months in space, an astronaut's mass in supporting bones will drop 8 -10 times faster than corresponding loss of bone mass for aging people on Earth.

This is NASA's first study on calcium and blood pressure in space. Known as NIH-R4, this experiment is the fourth in a series of life sciences studies jointly sponsored by NASA and the National Institutes of Health (NIH). The NIH-R experiments use rodents to study various biological aspects of space flight. NASA's Ames Research Center, Mountain View, CA, is the experiment developer.

This flight experiment will include two groups of rats, one on a high-calcium diet, the other on a diet low in calcium. After the flight, scientists will conduct tests on tissues from the rats to find out how the different calcium intakes affected blood pressure and cardiovascular functioning in the microgravity environment.

"This research offers hope to the tens of millions of people suffering from calcium-related conditions such as osteoporosis and hypertension," McCarron said.

For more information about the NIH-R4 study, see the home page at URL http://weboflife.arc.nasa.gov/EXPLORATIONS/MISSIONS/nihr4.html.

-end-

News Release

National Aeronautics and
Space Administration

Washington, DC 20546
(202) 358-1600

Ed Campion
Headquarters, Washington, DC
(Phone: 202/358-1778)

Eileen Hawley
Johnson Space Center, Houston, TX
(Phone: 281/483-5111)

For Release
November 14, 1996

RELEASE: 96-238

CREW NAMED TO FOURTH MICROGRAVITY INVESTIGATION FLIGHT

Astronaut Kevin Kregel will command the crew of the fourth U. S.Microgravity Payload flight scheduled for an October 1997 launch on board Columbia on mission STS-87. Kregel will be joined by Pilot Steven W. Lindsey (Major, USAF) and Mission Specialists Winston E. Scott (Captain, USN), Kalpana Chawla, Ph.D. and Takao Doi, Ph.D. of the National Space Development Agency of Japan (NASDA)

During 16 days on orbit, the astronauts will support fundamental science investigations and studies on the effects of microgravity on a variety of materials. The studies will focus on how materials, including metal and crystals, solidify when removed from the distorting effects of Earth's gravity, and will provide a better understanding of basic physics problems.

Scott and Doi also will perform a spacewalk during the flight. Doi will be the first Japanese astronaut to conduct a spacewalk.

STS-87 will mark Kregel's third space flight, his first as Commander. During his most recent space flight, he was the pilot on Columbia on STS-78, the longest duration Shuttle mission to date lasting 17 days. Scott will be making his second Shuttle flight, having flown previously on STS-72 in January 1996 during which he performed a spacewalk. Lindsey, Chawla and Doi are members of the 1995 Astronaut Class. They will be making their first journey to space during STS-87 having completed more than one year of training to prepare them for assignment to a Shuttle flight. Doi was selected by NASDA in 1985 and participated in training as a backup candidate for a Japanese Spacelab mission prior to being named to the 1995 class.

For complete biographical information on the STS-87 crew, or any astronaut, see the NASA Internet biography home page at URL:http://www.jsc.nasa.gov/Bios/

-end-

News Release

National Aeronautics and
Space Administration

Washington, DC 20546
(202) 358-1600

For Release

Don Nolan-Proxmire
Headquarters, Washington, DC
(Phone: 202/358-1983)

November 14, 1996

Fred Brown
Dryden Flight Research Center, Edwards, CA
(Phone: 805/258-2663)

RELEASE: 96-239

F-15 ACTIVE ACHIEVES FIRST-EVER MACH 2 THRUST-VECTORING

A significant milestone in advancing the capabilities of high-performance aircraft was achieved recently at the Dryden Flight Research Center, Edwards, CA, when a highly-modified F-15 aircraft employed thrust-vectoring of its engine exhausts at speeds of almost Mach 2.

Don Gatlin, Project Manager of the F-15 Advanced Control Technology for Integrated Vehicles (ACTIVE) program at Dryden, said the four flights Oct. 31 and Nov. 1 marked the first time that vectoring -- or deflecting -- of engine thrust had been accomplished at such speeds. The tests were carried out in restricted airspace at an altitude of about 45,000 feet.

"We did both pitch (up-and-down) and yaw (side-to-side) vectoring at more than Mach 1.95, and to our knowledge, that's the first time in history it's been done," he added. "That's given us the ability to do thrust vectoring anywhere in the (flight) envelope of this aircraft."

The F-15 being flown in the ACTIVE research program is a highly-modified two-seat "B" model of the Air Force tactical fighter. It employs a digital flight control system, active canards mounted ahead of the wings and prototype Pitch-Yaw Balance Beam Nozzles developed by engine manufacturer Pratt and Whitney which are mounted on the aircraft's F100-PW-229 engines.

ACTIVE is a joint program between Dryden, the Air Force Flight Dynamics Laboratory, Pratt and Whitney and the McDonnell Aircraft Division of McDonnell-Douglas Aerospace. It seeks to improve performance of both commercial and military aircraft by integrating a variety of advanced propulsion, aerodynamic and control system technologies.

-more-

"The intent is to look at not only performance and maneuvering benefits, but to look at safety improvements," said ACTIVE Chief Engineer Gerard Schkolnik. "These are things which hadn't really been addressed by previous thrust-vectoring programs such as the X-31, the F-18 High-Angle-of-Attack Vehicle or the F-16 multi-axis thrust-vectoring programs."

Although significant improvements in maneuvering capability due to thrust vectoring were demonstrated in those programs, speeds were limited to about Mach 1.2, or slightly above the speed of sound, Schkolnik noted. The current program is designed to explore the technology across the entire flight regime of the F-15, which is capable of speeds in excess of Mach 2 for short periods.

Dryden Research Pilot Jim Smolka, who flew two of the four milestone flights in the ACTIVE F-15, pointed out that thrust-vectoring technology has applications for commercial as well as military aircraft.

"In the commercial arena, it will improve the cruise performance of future supersonic transports by reducing the aerodynamic drag on the airplane and will allow the engines to pick up some of the control," he said. "In the tactical arena, we're hoping that aircraft will be able to sustain higher load factors and better maneuverability due to thrust-vectoring capabilities," Smolka added.

Gatlin noted that thrust vectoring nozzles also have the potential for reducing noise at takeoff and landing, a critical design consideration in development of next-generation supersonic airliners.

The thrust-vectoring nozzles are capable of swiveling up to 20 degrees in any direction. The aircraft's engine mounts, as well as the engine cases themselves, were modified to withstand the higher dynamic forces resulting from thrust vectoring. The nozzles were designed by Pratt and Whitney to be adaptable to current or future aircraft employing the same engine with only minor changes.

The ACTIVE F-15 engines produce about 29,000 lbs. of thrust each at full power. With a maximum takeoff weight of 47,000 lbs., the research aircraft has a thrust-to-weight ratio greater than one to one. The aircraft is 64 feet long, excluding its flight-test nose probe, and has a wingspan of about 43 feet.

-end-

NOTE TO EDITORS: A number of still photos are avilable to support this release. Photos are also available on the Internet under "NASA Dryden Research Aircraft Photo Archive, Dryden News and Feature Photos, URL: http://www.dfrc.nasa.gov/PhotoServer/photoserver.html."

News Release

National Aeronautics and
Space Administration

Washington, DC 20546
(202) 358-1600

For Release

November 15, 1996

Brian Welch
Headquarters, Washington, DC
(Phone: 202/358-1600)

RELEASE: 96-240

VENNERI NAMED NASA CHIEF TECHNOLOGY OFFICER

Samuel L. Venneri has been named Chief Technologist at NASA Headquarters, Washington, DC. Venneri will report directly to Administrator Daniel S. Goldin, and serve as the principal advisor and advocate on matters concerning Agencywide technology policy and programs. As Chief Technologist, Venneri also will chair NASA's Technology Leadership Council, whose members consist of the Enterprise Associate Administrators, the Chief Engineer and Chief Scientist, the Comptroller and NASA Center Directors.

"Sam brings great knowledge and expertise to this new position," said NASA Administrator Daniel S. Goldin. "As Chief Technologist he will provide a technology strategy, organizational structure and development process that will result in a stronger, more integrated Agencywide technology program." The appointment is effective immediately.

Before being named Chief Technologist, Venneri served as Director of the Spacecraft Systems Division in the former Office of Space Access and Technology. In that position he was responsible for the planning, advocacy and direction of all spacecraft and advanced instrument research and technology activities within that office.

Venneri started his career at NASA in 1981 as a Program Manager in the Materials and Structures Office, Office of Aeronautics and Space Technology. He was responsible for the technical direction, management and coordination of programs in spacecraft design technology, structural dynamics, computational analysis and design methodology and aircraft and engine materials and structures technology. Venneri was named Director of that office in 1984.

Prior to joining NASA, Venneri was an aerospace consultant with Swales and Associates, and principal engineer with Fairchild Space Electronics. In those positions, he worked in a variety of areas relating to spacecraft structural design and analysis as well as launch vehicle systems.

Venneri received his B.S. in aerospace engineering from Pennsylvania State University in 1969, and his M.S. in engineering science from George Washington University in 1975. He is presently completing a doctoral program in engineering at George Washington University.

-end-

Video Advisory

National Aeronautics and
Space Administration

Washington, DC 20546
(202) 358-1600

For Release

Sonja A. Maclin
Headquarters, Washington, DC
(Phone: 202/358-1600)

November 18, 1996

VIDEO ADVISORY: V96-139

CHEAPER, BETTER AND FASTER WAY TO RESURFACE BRIDGES ON NTV

NASA's Marshall Space Flight Center, Huntsville, AL, in cooperation with the Alabama Department of Transporation and USBI Co., recently used an environmently safe spray system developed from Space shuttle technology to quickly apply a non-skid surface to bridges. Using this new spray system--what once took several days to complete is completed in several hours. Also on NTV, will be NSCAT images, new X-ray technology and replays of STS-80 experiments and interviews.

ITEM #1: Fast Drying Space Spray
New spray sytem that can resurface bridges in hours instead of days.
ITEM #1a: INTERVIEW-Vernotto McMillan, NASA Engineer
ITEM #1b: INTERVIEW-Kyle Hamlin, Materials Engineer
ITEM #1b: INTERVIEW-James Keith, Alabama Dept. of Transportation
ITEM #2: NSCAT Global Land
Global image of land surfaces as seen by the NASA Scatterometer (NSCAT) aboard Japan's Advanced Earth Observing Satellite.
ITEM #2a: NSCAT/South America
Radar image of the Amazon rainforest in South America.
ITEM #2b: NSCAT/Antarctica
Image of Antarctica and the surrounding sea-ice pack constructed from six days of data collected by NSCAT.
ITEM #3: Revolutionary X-ray Device-Marshall Space Flight Center
B-roll of of collaborative research agreement between NASA and the National Institute of Health to facilitate the development of new X-ray technology that could improve scientific research and more.
ITEM #3a: INTERVIEW-Dr. Daniel Carter, NASA Research Scientist
ITEM #3b: INTERVIEW-Dr. David Gibson, X-Ray Optical Systems Inc
ITEM #3c: INTERVIEW-Dr. Walter Gibson-Professor of Physics, Univ. of NY
ITEM #4: STS-80 Animation
Animation depicting the STS-80 mission including the two planned space walks.
ITEM #5: STS-80 Crew Training
ITEM #6: STS-80 Calcium Experiment
Rats with high blood pressure flying on STS-80 may help scientists better understand how calcium helps maintain human health.
ITEM #6a: INTERVIEW-Dr. David McCarron, Professor of Medicine, Oregon Health Science University
ITEM #7: ORFEUS-SPAS
Free-flying experiment payload aboard Columbia which will study the origin and makeup of stars.
ITEM #7a: INTERVIEW-Dr. Ron Polidan, ORFEUS-SPAS 1 Mission Specialist
ITEM #8: Hands-on Space Experiment
The Space Experiment Module is an education initiative that provides increased access to space.
ITEM #8a: INTERVIEW-Stephanie Kallab, Student@Hampton Elem., Lutherville, MD
ITEM #8b: INTERVIEW-Mary Davem-Fitzsimmons, Student@Hampton Elem., Lutherville, MD
ITEM #8c: INTERVIEW-Dr. Ruthan Lewis, SEM Mission Manager
ITEM #9-13: INTERVIEWS of STS-80 Crew

Video news files air noon, 3, 6, 9 p.m. and midnight EDT.

NASA Television is broadcast on Spacenet 2, transponder 5, channel 9, C-Band, located at 69 degrees West longitude, with horizontal polarization. Frequency is on 3880.0 megahertz, with audio on 6.8 megahertz.

- end -

News Release

National Aeronautics and
Space Administration

Washington, DC 20546
(202) 358-1600

For Release

November 18, 1996

Michael Braukus
Headquarters, Washington, DC
(Phone: 202/358-1979)

Steve Roy
Marshall Space Flight Center, Huntsville, AL
(Phone: 205/544-0034)

RELEASE: 96-241

AGENCIES SIGN UP TO DEVELOP REVOLUTIONARY X-RAY DEVICE

NASA and the National Institutes of Health signed an agreement to facilitate the development of new X-ray technology with the potential to improve scientific research and enhance people's quality of life through better medical imaging instruments.

The collaborative research agreement takes new X-ray technology recently developed by NASA's Marshall Space Flight Center, Huntsville, AL, X-Ray Optical Systems, Inc., Albany, NY, and the Center of X-Ray Optics of the State University of New York at Albany and enhances its imaging capabilities for a variety of commercial uses.

A primary use of the new technology is in research leading to the development of new disease-fighting drugs. "Once developed, the X-ray device will enhance a researcher's ability to determine difficult protein structures at a faster pace, which is critical to new drug design," said Dr. Dan Carter of Marshall's Laboratory for Structural Biology.

Other expected applications in scientific research and medicine include better manufacturing control for semi-conductor circuits and better medical imaging, such as in mammography and improved forensics.

The NASA developed X-ray technology is capable of generating beams that are more than 100 times the intensity of conventional X-rays. At the heart of the NASA technology is a new type of optics for X-rays called Capillary Optics. The X-rays can be controlled by reflecting them through tens of thousands of tiny curved channels or capillaries, similar to the way light is directed through fiber optics. The high-intensity beams will permit scientific and medical research to be performed in less time with higher accuracy and could permit the use of smaller, lower-cost and safer X-ray sources.

-more-

"The technology can be applied to research on the Space Shuttle and International Space Station," said Joel Kearns, Program Manager of NASA's Microgravity Research Program. NASA's contribution to the agreement is sponsored by Kearn's program conducted at Marshall for the Office of Life and Microgravity Sciences and Applications at NASA Headquarters, Washington, DC. The agreement between NASA and the National Institutes of Health will be effective until Sept. 30, 1999.

-end-

News Release

National Aeronautics and
Space Administration

Washington, DC 20546
(202) 358-1600

For Release

James Cast
Headquarters, Washington, DC
(Phone: 202/358-1779)

November 18, 1996

Dave Drachlis
Marshall Space Flight Center, Huntsville, AL
(Phone: 205/544-0034)

RELEASE: 96-242

SPACE SHUTTLE TECHNOLOGY LEADS TO A CHEAPER, BETTER AND FASTER WAY TO RESURFACE BRIDGES

The era when it takes two-to-three days for workers to resurface a bridge as commuters crawl and sometimes sit in heavy traffic may be over thanks to NASA, the Alabama Department of Transportation and USBI Co.,Huntsville, AL.

An environmentally friendly spray system developed from Space Shuttle technology was used to quickly apply a non-skid surface to a bridge south of Huntsville, AL. Four hours after the surface was applied, traffic was again crossing the bridge.

Using the spray process, researchers completed the resurfacing job in a fraction of the time conventional methods take. Once the surface is prepared, the current method requires workers to apply a resin system to the roadway, manually lay down a coat of gravel or non-skid materials and finally apply a second coat of resin. This new process does the entire job in one pass.

NASA's Marshall Space Flight Center, Huntsville, AL, and USBI designed the resurfacing tool, which uses a USBI-developed Convergent Spray Technologies spray process and nozzle. The Convergent Spray Technologies process is currently used to apply a heat-resistant coating to the Shuttle's Solid Rocket Boosters.

"Not only does it shorten the job, but the process does not harm the environment. It uses a solvent-free spray, significantly reducing hazardous waste normally associated with most spray applications," said Kyle Hamlin, materials engineer at USBI.

-more-

Another plus for the environment is that common and recycled filler materials and common resin systems can be used with the spray equipment. For this project, investigators used a mixture of ground flint and resin to resurface the bridge. The new coating provides a higher grade of traction and will better protect the bridge from erosion than current bridge coatings.

"This project gives us the opportunity to evaluate a new pollution-prevention technology and to try out different adhesives and filler materials which could be used for other NASA programs," said Vernotto McMillan, a technical manager at Marshall.

"We wanted to take existing NASA technology and develop it for use in other NASA and commercial applications, then demonstrate that its use affords a cheaper, better and faster product," he said.

The bridge resurfacing project is a product of a 1994 agreement between Marshall and the Federal Highway Administration's Region 4 office for the Southeastern United States. Marshall and its contractors agreed to provide innovative technology derived from the space program and put it to use for a variety of highway applications, including corrosion resistant coatings for metal bridges and non-skid surface treatment for pavements.

This multi-use time and money-saving process could have many applications. So far, investigators are evaluating applications of low-solvent coatings on low-slope roofs for commercial buildings and working with a food company to spray toppings on snack foods.

"The successful commercial adaptation of this space program technology is yet another example that shows America's space program is paying off for American business and industry," said Harry G. Craft Jr., manager of the technology transfer office at Marshall.

"Technologies developed for the nation's space program by NASA and its contractors are now at work in thousands of American firms, benefiting millions of Americans," he said.

-end-

News Release

National Aeronautics and
Space Administration
Washington, DC 20546
(202) 358-1600

For Release

November 18, 1996

Douglas Isbell
Headquarters, Washington, DC
(Phone: 202/358-1753)

Mary Hardin
Jet Propulsion Laboratory, Pasadena, CA
(Phone: 818/354-5011)

Hideo Hasegawa/Hiroyuki Ikenono
National Space Development Agency of Japan, Tokyo
(Phone: 81-3-5470-4127)

RELEASE: 96-243

INGENUITY ENABLES NASA SCATTEROMETER TO STUDY ICE, RAINFORESTS

Recent images produced from the NASA Scatterometer (NSCAT) are giving scientists new insight into the Antarctic ice sheet and the Amazon rainforest, after researchers devised ways of using the ocean-monitoring instrument to study land and ice.

The scatterometer's primary function is to study winds over the oceans. A scientist at Brigham Young University (BYU), Provo, UT, however, has developed a way of enhancing the resolution of the instrument's radar backscatter to take a detailed look at land and ice surfaces as well.

"A radar scatterometer measures the radar backscattering cross-section of the Earth's surface. Measurements of the backscatter over the ocean are used to infer the near-surface wind speed and direction, but also can be used over land to study ice and vegetation," said Dr. David Long, an NSCAT team member at BYU. "Areas which reflect more microwaves are typically rougher and appear brighter in the images than smoother areas, which reflect less. The electrical properties of the surface also affect the image brightness. This is the first time we've been able to provide rapid, global coverage that is both uniform and accurate at this resolution."

The polar regions play a central role in regulating global climate, and it is important to accurately record and monitor the extent and surface conditions of the Earth's major ice masses, according to Long. Scientists are using the Antarctic image to understand the effects of the ice pack on the oceans and on related climate systems. The image shows variations in the ice sheet, as well as a "super-iceberg" that broke off the Thwaites ice tongue and is now circulating in the sea-ice pack.

-more-

"Spaceborne radar remote sensors are uniquely well-suited for mapping the polar regions since the radar can image the surface through clouds, both day and night. Similarly, radars also are useful for vegetation studies because different vegetation types and densities have different radar responses," Long said. "Tropical rainforests are critical to the climatic health of the Earth and are thought to contain half of all the world's species."

The new NSCAT image shows the extent of the tropical rainforest. The false color image is being used by scientists to identify types of vegetation on the surface, which allows them to differentiate between areas of tropical rainforest and regions of woodlands and savanna.

"This technique of using the scatterometer to study land and ice is a great new application of this radar instrument. We can get measurements of ice extent for use in research and as an aid to shipping, and we get them accurately and frequently under all weather conditions," said Jim Graf, the NSCAT Project Manger at the Jet Propulsion Laboratory (JPL), Pasadena, CA. "We can view large scale vegetation changes enabling us to track the processes of desertification and deforestation. Data from the NSCAT instrument is extremely versatile and can be used to measure short-term changes over the oceans and long-term changes over the land and ice."

The scatterometer uses an array of stick-like antennas that radiate microwave pulses in the Ku-Band across broad regions of the Earth's surface. A small fraction of the energy in the radar pulses is reflected back and captured by NSCAT's antennas. At any given time NSCAT's array of six dual-beam antennas scans two swaths of ocean or land -- one on either side of the satellite's near-polar, sun-synchronous 500-mile orbit. Each swath is 375 miles wide.

The scatterometer makes 30-mile resolution measurements of the wind over the oceans. This resolution is too coarse for most land and ice studies, but through computer enhancement of the data, Long is able to produce images with a virtual resolution of 4.8 miles or better. "This resolution is still coarse when compared with photographs, but it is nearly ideal for studying many land and ice processes," Long concluded.

The NSCAT instrument was launched on August 16, 1996, aboard Japan's Advanced Earth Observing Satellite (ADEOS). ADEOS is an international global change research mission of the National Space Development Agency of Japan, which includes instruments from the United States, Japan and France, with investigators from many other countries. The satellite is a key part of an international environmental research effort that includes NASA's Mission to Planet Earth (MTPE) program, a long-term, coordinated research effort to study the Earth as a global environmental system. The goal of MTPE is to develop a better scientific understanding of natural environmental changes and to distinguish between natural and human-made changes and impacts.

JPL developed, built and manages the NSCAT instrument for NASA's Office of Mission to Planet Earth, Washington, DC.

Images to accompany this release are available to news media representatives by calling the Headquarters Imaging Branch at 202/358-1900. The NASA photo numbers are:

South America	96-HC-737	(color)
Antarctic	96-H-738	(B&W)
Global view	96-H-739	(B&W)

The images also are available electronically through the Internet on the following URL:
http://www.jpl.nasa.gov/winds/

-end-

Video Advisory

National Aeronautics and
Space Administration

Washington, DC 20546
(202) 358-1600

For Release

Sonja A. Maclin
Headquarters, Washington, DC
(Phone: 202/358-1600)

November 19, 1996

VIDEO ADVISORY: V96-140

SPACE SHUTTLE LAUNCH, NEW HUBBLE SPACE TELESCOPE IMAGES ON NTV

NASA TV will air live coverage of the STS-80 Space Shuttle Columbia launch at 2:53 pm EST tomorrow. NTV also will air dramatic new Hubble Space Telescope images that show quasars in a variety of galaxies.

ITEM #1: Animation-Birth of a Quasar
Animation of a quasar erupting in the core of a normal galaxy.

ITEM #2: Animation-Merging Galaxies
Animation of two interacting galaxies being drawn together by gravity

ITEM #3: Quasars Host Galaxies
Hubble Space Telescope (HST) images of six quasars host galaxies.

ITEM #4: Spiral Galaxy
HST image of a quasar 1.4 billion light-years from Earth.

ITEM #5: Elliptical Galaxy
HST image of a quasar 1.5 billion light-years from Earth.

ITEM #6: Colliding Galaxies
HST image that reveals evidence of a catastrophic collision between two galaxies.

ITEM #7: Merging *Galaxies*
HST image of a quasar located 1.6 billion light years from Earth merging with a bright galaxy .

ITEM #8: Peculiar Galaxy I
HST images showing a tidal tail of dust and gas beneath a quasar that is 2.2 billion light-years from Earth.

ITEM #9: Peculiar Galaxy II
HST image that reveals evidence of a dance between two merging galaxies

ITEM #10: INTERVIEW-Dr. Chris Blades, European Team Member Investigating Quasar Host Galaxies

ITEM #11: INTERVIEW-Dr. John Bahcall, Principal Investigator of Quasar Host Galaxies

Video news files air noon, 3, 6, 9 p.m. and midnight EST.

NASA Television is broadcast on Spacenet 2, transponder 5, channel 9, C-Band, located at 69 degrees West longitude, with horizontal polarization. Frequency is on 3880.0 megahertz, with audio on 6.8 megahertz.

- end -

News Release

National Aeronautics and
Space Administration

Washington, DC 20546
(202) 358-1600

For Release

November 19, 1996

Don Savage
Headquarters, Washington, DC
(Phone: 202/358-1547)

Tammy Jones
Goddard Space Flight Center, Greenbelt, MD
(Phone: 301/286-5566)

Ray Villard
Space Telescope Science Institute, Baltimore, MD
(Phone: 410/338-4514)

RELEASE: 96-244

HUBBLE SURVEYS THE "HOMES" OF QUASARS

Two teams of astronomers are releasing dramatic Hubble Space Telescope images today, which show that quasars live in a remarkable variety of galaxies, many of which are violently colliding. This complicated picture suggests there may be a variety of mechanisms -- some quite subtle -- for "turning on" quasars, the universe's most energetic objects.

The Hubble researchers also are intrigued by the fact that the quasars studied do not appear to have obviously damaged the galaxies in which they live. This could mean that quasars are relatively short-lived phenomena which many galaxies, including the Milky Way, experienced long ago.

John Bahcall of the Institute for Advanced Study, Princeton, NJ, emphasizes that Hubble's clarity opens a complicated picture. "If we thought we had a complete theory of quasars before, now we know we don't," says Bahcall. "No coherent, single pattern of quasar behavior emerges. The basic assumption was that there was only one kind of host galaxy, or catastrophic event, which feeds a quasar. In reality we do not have a simple picture -- we have a mess."

Mike Disney, University of Wales College, Cardiff, U.K., who is the leader of the European team, says, "People had suspected that collisions might be an important mechanism for feeding black holes and generating the vast amounts of energy emitted by quasars. Now we know they are and we didn't know that before Hubble. This is a really exciting achievement."

Though a number of the images show collisions between pairs of galaxies which could trigger the birth of quasars, some pictures reveal apparently normal, undisturbed galaxies possessing quasars. "We were amazed by the beauty and clarity of the Hubble images, as well as the diversity of quasar environments," says Donald Schneider of Pennsylvania State University, State College, PA.

-more-

Discovered only 33 years ago, quasars are among the most baffling objects in the universe because of their small size and prodigious energy output. Quasars are not much bigger than Earth's solar system but pour out 100 to 1,000 times as much light as an entire galaxy containing a hundred billion stars.

A super massive black hole, gobbling up stars, gas and dust, is theorized to be the "engine" powering a quasar. Most astronomers agree an active black hole is the only credible possibility that explains how quasars can be so compact, variable and powerful. Nevertheless, conclusive evidence has been elusive because quasars are so bright they mask any details of the "environment" where they live.

"These problems couldn't be solved without the Hubble Telescope," Disney said. "I gave up on studying quasars 20 years ago, because I realized we had to wait for a space telescope to provide a clear enough view for solving mysteries."

Observations by the European team, using the Wide Field Planetary Camera 2 (WFPC2) in high-resolution mode, reveal that quasars appear to be born in environments where two galaxies are interacting violently and probably colliding. "This had long been suspected as a mechanism for igniting a quasar but no one knew whether the idea was really right, before the Hubble," says Peter Boyce of the European team.

"In nearly every quasar we look at we clearly see one galaxy apparently swallowing another," Disney said. He selected three quasars known to be strong infrared emitters, suggesting that they might be in spiral galaxies, which typicallycontain a great deal of gas and dust. "When we image them with Hubble we see the most colossal smashups, where two giant spiral galaxies like our own Milky Way have crashed head on into one another and flung off pieces violently in all directions. Some of those bits seem to have finished up in the nucleus of one of the spirals where there is probably a giant black hole feeding on it."

Bahcall, Schneider and Sofia Kirkahos also used the WFPC2, but in wide-field mode, to survey 20 quasars. Bahcall finds about half of the quasars studied have host galaxies which look undisturbed. "Either the interacting companion is very close to the nucleus and below Hubble's resolution, or other mechanisms are at work in igniting quasars."

Both teams agree that Hubble images do show conclusively:

• That most quasars lie at the cores of luminous galaxies, both spiral and elliptical. Though underlying galaxies were suggested in ground-based quasar observations, astronomers had to wait for Hubble's capabilities to show the host galaxies clearly enough for astronomers to begin to classify their shapes.

* Interactions between galaxies, either through direct collisions or near encounters, can be important in "turning on" a quasar, by dumping fuel onto a black hole. However, some quasars look unperturbed, so there may be other, more subtle mechanisms for feeding the black hole. "Some of the galaxies we observed don't appear to know they have a quasar in their cores," says Bahcall. "This may be a very important clue, since it was a completely unexpected result."

* Quasars that are "radio quiet" are often in elliptical galaxies, not always in spiral galaxies, as previously believed.

Further quasar research will be challenging because of the great distance and long time scales involved. "It's like having a few still shots of a football game and trying to decipher both the rules and the final score. It's very challenging, and great fun, but you are obviously open to making the most dramatic mistakes. We'll get there in the end but we may need a lot of Hubble pictures to be certain what is going on," Disney said.

Now that more is known about the environments in which quasars exist, the teams emphasize astronomers must address even larger puzzles. Do most quasars flare up for a brief period of a galaxy's life (100 million years or less)? If so, then most galaxies, including our Milky Way, could be "burned out" quasars. If, alternatively, quasars are long-lived, it implies they are more rare. "This means a few extremely massive black holes formed very early in the universe," says Disney.

Astronomers also need to address a "chicken and egg" problem about the birth of quasars. Did the massive black holes form first and the galaxies formed around them, or did galaxies precede black holes, which quickly grew in their cores though stellar collision and merger?

Advanced instruments planned for Hubble should also help pin down more details. The Near Infrared Camera and Multi-Object Spectrometer (NICMOS), to be installed in 1997, and the Advanced Camera, to be installed in 1999, will have coronagraphic devices which will block out the glare of a quasar, allowing astronomers to see closer into a galaxy's nucleus. By viewing galactic structures in infrared light, the NICMOS should be able to provide important new details about the host galaxies of quasars.

The Space Telescope Science Institute is operated by the Association of Universities for Research in Astronomy, Inc. (AURA) for NASA, under contract with the Goddard Space Flight Center, Greenbelt, MD. The Hubble Space Telescope is a project of international cooperation between NASA and the European Space Agency.

- end -

EDITOR'S NOTE: Images to accompany this release are available to news media representatives by calling the Headquarters Imaging Branch on 202/358-1900.

NASA photo numbers are:

Color: 95-HC-729	B&W: 955-H-729
Color: 95-HC-730	B&W: 955-H-730

The images also are available electronically through the Internet via World Wide Web, ftp or Gopher. The Internet addresses are:

ftp: ftp.stsci.edu (IP address: 130.167.1.2)
WWW URL: http://www.stsci.edu
Gopher: www.stsci.edu

The image file name is: /pubinfo/gif/N132D.gif OR /pubinfo/jpeg/N132D.jpg

News Release

National Aeronautics and
Space Administration
Washington, DC 20546
(202) 358-1600

For Release

November 20, 1996

Michael Braukus
Headquarters, Washington, DC
(Phone: 202/358-1979)

Kyle Herring
Johnson Space Center, Houston, TX
(Phone: 281/483-5111)

Jim Keller
Boeing Public Relations, Huntsville, AL
(Phone: 205/461-2803)

RELEASE: 96-245

FIRST U.S. SPACE STATION MODULE SUCCESSFULLY COMPLETES FINAL PRESSURE TEST; LAUNCH JUST ONE YEAR AWAY

The first U.S. component of the International Space Station, known as Node 1, has successfully completed its last proof pressure test before it is launched next year and the construction of the Space Station gets underway.

Boeing engineers in Huntsville, AL, conducted the pressure test on Node 1 at the Boeing Huntsville plant. During the four-hour test, the node was successfully pressurized to 22.8 pounds per square inch, or 1.5 times normal maximum operating pressure. This final successful test confirms the effectiveness of the eight struts installed at the node's radial ports. As in a previous successful test last August, the strains in the node's radial port were substantially reduced from those encountered during previous testing without the installed struts.

"This successful pressure test on Node 1 proves that we have designed and built a critical Space Station component that will perform as required in space," said Ross Dessert, Boeing lab/hab program manager.

Node 1 is the first U.S. Space Station component scheduled to be launched in December 1997. The node serves as connecting passageway to other modules on the International Space Station. With the pressure test now completed, Node 1 will be moved out of the Boeing test facility and returned to the space station manufacturing building for assembly and check-out activities at NASA's Marshall Space Flight Center in Huntsville.

-more-

Last August, Node 1 and the laboratory module successfully completed a series of proof pressure tests. Like this last Node 1 test, data analysis from the August tests indicated both modules' performance was excellent. Just six months from now -- May 1997 -- Node 1 will be shipped out of Huntsville to the Kennedy Space Center in preparation for its early December 1997 Shuttle launch to join the Russian functional energy block (FGB). The FGB is scheduled for launch in late November 1997, just one week before it is joined by Node 1, 220 miles above the Earth.

The FGB is a self-powered vehicle that provides attitude control and electrical power through the early assembly stages of the Space Station.

Boeing, the United States' prime contractor for the International Space Station, is building five modules at Marshall. In addition to Node 1, Boeing also is building the U.S. habitat, or living quarters module, the laboratory module, another node and an airlock. The major structural manufacturing of all these modules has been completed. Additional assembly work currently is underway, including mechanical installation.

Fourteen nations are involved in the International Space Station: the U.S., Russia, Japan, Canada, Belgium, Denmark, France, Germany, Italy, the Netherlands, Norway, Spain, Sweden and Switzerland.

The International Space Station will be the largest and most complex structure ever placed in orbit, sprawling across an area nearly the size of two football fields and visible to the naked eye as it passes overhead.

Once assembled, the International Space Station will have a mass of nearly one million pounds and provide 46,000 cubic feet of pressurized living and working space for astronauts and scientists.

Construction is scheduled to be completed in June 2002.

-end-

VideoAdvisory

National Aeronautics and
Space Administration

Washington, D.C. 20546
(202) 358-1600

For Release

Sonja A. Maclin
Headquarters, Washington, DC
(Phone: 202/358-1600)

November 21, 1996

VIDEO ADVISORY: V96-141

TELEROBOTICS ON NTV

NASA and the University of North Dakota are working together to offer a computerized course in telerobotics. This course will enable students to attend virtual classrooms on the Internet and earn college credits as well.

ITEM #1: Russian Rover Animation
Animation of a remotely controlled Russian rover. **This project is scheduled for a future launch.**

ITEM #2 Roving In The Desert
Footage of a remotely controlled Russian Mars rover on a Navajo Indian Reservation in Arizona.

ITEM #3 INTERVIEW: Dr. Carol Stokes
Dr. Stokes discusses Russian Mars Rover tests.

Video news files air noon, 3, 6, 9 p.m. and midnight EST.

NASA Television is broadcast on Spacenet 2, transponder 5, channel 9, C-Band, located at 69 degrees West longitude, with horizontal polarization. Frequency is on 3880.0 megahertz, with audio on 6.8 megahertz.

- end -

News Release

National Aeronautics and
Space Administration

Washington, DC 20546
(202) 358-1600

For Release

November 21, 1996

Don Nolan-Proxmire
Headquarters, Washington, DC
(Phone: 202/358-1983)

John Bluck
Ames Research Center, Mountain View, CA
(Phone: 415/604-5026)

Dr. Charles Wood
University of North Dakota, Grand Forks, ND
(Phone: 701/777-3167)

RELEASE: 96-246

NASA LIVE INTERNET COURSE OFFERED

NASA and the University of North Dakota are collaborating to offer a computerized course in 'telerobotics' -- enabling students to attend virtual classrooms on the Internet and to earn college credit. Telerobotics is the operation and control of a robot at some distance from the workplace.

The experimental course, offered by the university's Dept. of Space Studies, will run from Jan. 22 through March 26, 1997. More than one hundred students from countries including England, Australia, Malaysia and Canada will hear lectures on "Robotic Vision" and "Automating a Dexterous Robotic Arm" during the course.

"The project is designed to demonstrate a new and unique distance learning technology model that has not been attempted at this advanced level for college credit," said Mark Leon, Information Infrastructure Technology and Applications (IITA) Deputy Program Manager at NASA's Ames Research Center, Mountain View, CA. "Our intention is to present an evaluation of the course at the Internet Society Conference to be held in Malaysia in June 1997," he said.

"At the end of the course, students in this class will be allowed to drive a robot at a distance from their remote sites," Leon added. For the course, registered students will need at least a 28.8 kbps computer connection to see video that will feature eight presenters.

Students who wish to receive university credit must register with the University. For students outside North Dakota, an enrollment fee of $294.95 is required. Enrollment deadline is Jan. 22. Registration information can be found at:
http://www.space.edu

-more-

"There are a limited number of Real Audio channels and CU-SeeMe channels and these will be reserved for registered students," Leon said. Real Audio permits students to hear live sound via their personal computers that are hooked to the Internet class. CU-SeeMe is computer software technology that allows a student to see the professor and others in the class as well as to see robotic vision with the computer monitor.

"Many others will be able to participate in this course without registering, although their experience could be limited if instructional channels are all in use," Leon added. "Anyone on the Internet, even those with slow speed connections, can participate," he explained. More information about how to participate is found at: http://quest.arc.nasa.gov/courses/telerobotics

"We will be making provisions so that anyone can participate in the course through such mechanisms as computer 'chat windows,' e-mail and the World Wide Web," Leon said. Chat windows permit users to submit typed questions as well as review text being exchanged by other students, the presenters and the professor.

If there is a high demand for information presented in the course, a second transmission of the classes will be made over the Internet. Other topics covered during the course will include: Remote Science Applications of Robots, Human Interface for Robotic Control, Elements of Field Robotic Design, Information Technology, Telemedicine Applications and Operating a Remotely Operated Vehicle over the Internet. A final examination also will be given to students via the World Wide Web.

The project is part of a three year, $170,000 NASA grant to the university that is funded until 1998. "Under this grant, we will continue to develop distant learning models," Leon said. "So, it is likely that another class will emerge next semester." The telerobotics course is one of two distant learning projects that the IITA K-12 is exploring, he added.

"The other project is expected to take place in the continental United States and involves teaching an aeronautics course.

IITA is part of a larger government initiative to accelerate the development, application and transfer of high-performance technologies to U.S. engineering and science communities. IITA funds more than 50 different programs.

The goal of IITA is to promote the growth of a National Information Infrastructure using the vast amount of information that NASA has acquired since its creation. Access to this knowledge will allow the public and industry to contribute to rapid and significant advances in science, engineering, and technology.

-end-

News Release

National Aeronautics and
Space Administration

Washington, DC 20546
(202) 358-1600

Douglas Isbell
Headquarters, Washington, DC
(Phone: 202/358-1753)

George H. Diller
Kennedy Space Center, FL
(Phone: 407/867-2468)

Diane Ainsworth
Jet Propulsion Laboratory, Pasadena, CA
(Phone: 818/354-5011)

For Release
November 25, 1996

NOTE TO EDITORS: N96-77

MARS PATHFINDER SPACECRAFT SCHEDULED FOR LAUNCH DEC. 2

The launch of NASA's Mars Pathfinder spacecraft aboard a McDonnell Douglas Delta II rocket is scheduled for Monday, Dec. 2, at 2:09 a.m. EST. This is a single instantaneous target launch time without a second opportunity on that day. Liftoff will occur from Pad B at Launch Complex 17 on Cape Canaveral Air Station, FL. There is a 24-day launch opportunity that extends through Dec. 31.

The Mars Pathfinder, built by the Jet Propulsion Laboratory (JPL), Pasadena, CA, will descend through the Martian atmosphere to land on the planet's surface on July 4, 1997. It will deploy a small instrumented rover to investigate the terrain surrounding the spacecraft. Together, the Mars Pathfinder and rover will investigate the geology and elemental composition of the Martian rocks and soil, the Martian atmosphere and surface weather.

The Mars Pathfinder has completed final checkout and was mated to the Delta II rocket on Nov. 21.

PRELAUNCH NEWS CONFERENCE

A prelaunch news conference is scheduled for Saturday, Nov. 30, at 11 a.m. EST in the KSC News Center auditorium and will be carried live on NASA Television. Participating in the briefing will be:

Norman Haynes, Director of the Mars Exploration Directorate, JPL
Floyd Curington, NASA Launch Manager, Kennedy Space Center (KSC), FL

-more-

David Mitchell, Launch Services Manager, Goddard Space Flight Center, Greenbelt, MD
Rich Murphy, Flight Director, McDonnell Douglas
Don Ketterer, Program Executive, NASA Headquarters
Tony Spear, Mission Director/Project Manager, JPL
Joel Tumbiolo, Launch Weather Officer, USAF

A post-launch news conference will be held at the KSC News Center no earlier than two hours after launch to discuss the countdown, launch and current state of health of the Mars Pathfinder spacecraft.

ROVER DEMONSTRATION

Outside of the KSC News Center, following the prelaunch news conference, news media will be able to film and test drive a demonstration model of Mars Pathfinder's small rover.

ACCREDITATION

Those media without permanent accreditation who wish to cover the launch of Delta/Mars Pathfinder including the prelaunch news conference on L-1 day should send a letter of request to the KSC News Center on news organization letterhead. It should include name and Social Security number or passport number of those wishing accreditation. Letters should be faxed to 407/867-2692 or addressed to:

Mars Pathfinder Launch Accreditation
NASA PA-MSB
Kennedy Space Center, FL 32899

Mars Pathfinder mission badges may be picked up at the KSC News Center on Saturday, Nov. 30. On launch day, Mars Pathfinder mission badges will be available at Gate 1 on Cape Canaveral Air Station located on SR 401 prior to departure for Press Site 1.

STS-80 mission badges will be valid for the prelaunch news conference on L-1 day. However, a Delta/Mars Pathfinder mission badge is required for all media covering the launch from Press Site 1 on launch day. For further information on Mars Pathfinder launch accreditation, contact Selina Scorah at the KSC News Center at 407/867-2468.

REMOTE CAMERAS

Media wishing to establish remote cameras at the launch pad should meet at the KSC News Center at 11:30 a.m. EST on Sunday, Dec. 1, to be escorted to Launch Complex 17.

LAUNCH COVERAGE

The evening before launch, after the mobile service tower has been retracted from around the Delta II rocket at Complex 17, a photo opportunity will be available for the news media. A convoy will depart Gate 1 on Cape Canaveral Air Station located on State Road 401 at 5:45 p.m. EST, Sunday, Dec. 1.

Media covering the launch should assemble at the Gate 1 Pass & Identification Building on Cape Canaveral Air Station. The convoy for Press Site 1 will depart at 12:30 a.m. EST. After launch, media may leave via Gate 1 or may convoy under escort to the KSC News Center for the post-launch press conference.

The NASA News Center codaphone will carry Delta/Mars Pathfinder prelaunch status reports beginning at L-3 days, on Friday, Nov. 29, and may be dialed at 407/867-2525.

NASA TELEVISION AND V CIRCUIT COVERAGE

NASA Television will carry the prelaunch news conference at 11 a.m. EST on Saturday, Nov. 30. On launch day, Dec. 2, countdown coverage will begin at midnight.

The post-launch news conference will not be carried live on NASA Television but will be replayed at 5:30 a.m. EST on Dec. 2.

NASA Television is available on Spacenet 2, transponder 5, channel 9 located at 69 degrees West longitude.

Audio coverage of Delta/Mars Pathfinder activities will be available on the "V3" circuit which may be dialed directly at 407/867-1260. The "V1" and "V2" circuits (407/867-1220 and 1240) will carry live Space Shuttle Columbia mission audio.

-end-

VideoAdvisory

National Aeronautics and
Space Administration

Washington, D.C. 20546
(202) 358-1600

For Release

Sonja A. Maclin
Headquarters, Washington, DC
(Phone: 202/358-1600)

November 25, 1996

VIDEO ADVISORY: V96-142

SPACE HARVEST AND PATHFINDER ON NASA TV

MIR NASA TV will air footage of astronaut John Blaha conducting the wheat experiment aboard ~~STS-80~~. The wheat experiment is important research for considering plants as a major contributor to life support systems for space flight. NASA TV also will air footage of the record-setting Pathfinder as it resumes flight testing at the Dryden Flight Research Center, Edwards, CA. The Pathfinder is a solar powered research aircraft.

ITEM #1: Space Harvest

Footage of astronaut John Blaha conducting the wheat experiment aboard ~~STS-80~~ MIR. The broadcast also includes IMAX footage of the Mir and the Space Shuttle

ITEM #2: Pathfinder Returns

Footage of the solar-powered research aircraft as it resumes flight testing.

Video news files air noon, 3, 6, 9 p.m. and midnight EST.

NASA Television is broadcast on Spacenet 2, transponder 5, channel 9, C-Band, located at 69 degrees West longitude, with horizontal polarization. Frequency is on 3880.0 megahertz, with audio on 6.8 megahertz.

- end -

News Release

National Aeronautics and
Space Administration

Washington, DC 20546
(202) 358-1600

Don Nolan-Proxmire
Headquarters,Washington, DC
(Phone: 202/358-1983)

Fred Brown
Dryden Flight Research Center, Edwards, CA
(Phone: 805/258-2663)

For Release
November 25, 1996

RELEASE: 96-247

SOLAR-POWERED PATHFINDER RETURNS TO SKIES

The record-setting Pathfinder solar-powered research aircraft has resumed flight testing at NASA's Dryden Flight Research Center, Edwards, CA.

This was the first flight for Pathfinder since Sept. 11, 1995, when it set an altitude record of more than 50,500 feet on a flight from Dryden which lasted nearly 12 hours. The uncrewed ultralight craft, developed and operated by AeroVironment, Inc., of Simi Valley, CA, flew for approximately two hours earlier last week during a low-altitude checkout flight over the northern portion of Rogers Dry Lake at Edwards Air Force Base.

The remotely-piloted craft was operated by two pilots in both stationary and mobile ground-control stations during the flight. Pathfinder flew in a racetrack pattern in the Unmanned Aerial Vehicle area at altitudes ranging from about 300 to 1,000 feet while engineers checked out various aircraft systems.

A wealth of data was obtained on the operation of the solar-cell arrays (which cover more than 72 percent of the Pathfinder's upper wing surface), structural integrity and aircraft control systems.

John Del Frate, Dryden's Project Manager for Pathfinder, said NASA is pleased with the progress of the program, despite a setback a year ago when the craft was extensively damaged in a ground accident inside a hangar.

"It had been damaged following a static display last October," he said. "NASA is quite pleased that AeroVironment has been able to repair it and get it back in the air in just a little over a year."

-more-

In addition to repairing the damage, AeroVironment made several structural and systems improvements, including installation of stronger, lighter composite rib structures and higher-efficiency solar cells on the wing sections that had been damaged.

Pathfinder's current flights at Dryden are intended to check out systems prior to moving flight operations to the Navy's Pacific Missile Range Facility (PMRF) in Hawaii early next year for further tests. One or more flights at both low and high altitudes may be flown from Dryden within the next couple of months to check out Pathfinder's systems in a much colder environment.

Low sun angle and limited hours of sunlight during the winter will limit Pathfinder's altitude capability to about 20,000 feet. That limitation is one of the reasons that the project will be transferred to the PMRF on the island of Kauai, which lies at a lower latitude. Kauai's latitude and more favorable prevailing northerly winds will allow more opportunity for high-altitude solar-powered flying during a five-month flight test program.

Pathfinder is one of several remotely-piloted aircraft being evaluated under NASA's Environmental Research Aircraft and Sensor Technology (ERAST) program. The joint NASA-industry alliance is seeking to develop technologies required to operate slow-flying unpiloted aircraft at altitudes up to 100,000 feet on environmental-sampling missions lasting up to a week or longer.

Originally designed for a classified military program in the early 1980's, Pathfinder went through several modifications before being adopted into the ERAST program in 1993. With a span of 99 feet, Pathfinder is basically a flying wing. Only two small pods extend below the wing's center section to carry a variety of scientific sensors and support the craft's landing gear. The solar arrays on the wing can provide as much as 7,200 watts of power at high noon on a summer day to power the craft's six electric motors and other electronic systems. A backup battery system can provide power for up to two hours to fly the craft after the sun is down.

Built primarily of lightweight composite structure, plastic foam and a thin plastic covering, Pathfinder weighs about 500 lbs.

-end-

NOTE TO EDITORS:

Photos are available at Dryden to support this release. Photos also are available on the Internet at:

http://www.dfrc.nasa.gov/PhotoServer/photoserver.html.

News Release

National Aeronautics and
Space Administration

Washington, DC 20546
(202) 358-1600

For Release

Don Nolan-Proxmire
Headquarters, Washington, DC
(Phone: 202/358-1983)

November 26, 1996

Catherine E. Watson
Langley Research Center, Hampton, VA
(Phone: 757/864-6122)

NOTE TO EDITORS: N96-78

FIRST FLIGHT OF U.S.-RUSSIAN SUPERSONIC TESTBED SCHEDULED FOR NOV. 29

A modified Russian supersonic passenger jet will fly on Nov. 29 for the first time as part of a joint six-month flight research program between NASA, a U.S. industry team and the Russian aeronautics establishment.

The first flight of the supersonic Tu-144LL aircraft is scheduled for 10 a.m. local time at the Zhukovsky Airfield south of Moscow. Photo and interview opportunities will be available throughout the day.

During six months of flight tests, the Tu-144LL will carry NASA-sponsored experiments in support of the agency's High-Speed Research (HSR) program. The experiments will be conducted in cooperation with the Russian Tupolev Design Bureau. The HSR program, begun in 1990, teams NASA and U.S. industry to develop technology for a High-Speed Civil Transport. The U.S. industry team for the Tu-144 flight experiments is led by Boeing, with McDonnell Douglas, Rockwell, Pratt & Whitney and GE participating. The HSR program is managed by NASA's Langley Research Center, Hampton, VA.

Media who need accreditation in Russia should contact Thomas Thomson in Moscow at 7-095/258-4450 (Phone); or 7-095/258-4455 (Fax).

-end-

VideoAdvisory

National Aeronautics and
Space Administration

Washington, D.C. 20546
(202) 358-1600

For Release
November 27, 1996

Deanna Corridon
Headquarters, Washington, DC
(Phone: 202/358-1733)

VIDEO ADVISORY: V96-143

RUSSIAN SUPERSONIC JET TO BEGIN TESTS; EARLY DETECTION OF EYE DISEASE POSSIBLE

On Wednesday the NASA TV Video File will include B-roll of the TU-144L modified Russian supersonic passenger jet scheduled to make its first flight on November 29, in Moscow as part of a joint six-month high-speed flight research program between NASA, a U.S. industry team and Russia. The Video File also will feature a NASA-developed laser light scattering diagnostic probe that could possibly help ophthalmologists spot eye diseases and cataracts before they are severe enough to require surgery. NASA and the National Institutes of Health/National Eye Institute will work together to engineer and test this eye diagnostic system. NASA TV also will continue to provide live coverage of the Space Shuttle Columbia's ongoing mission operations.

ITEM #1: FIRST FLIGHT FOR SUPERSONIC JET
B-roll of the TU-144LL including rollout in March. For more information *contact Don Nolan-Proxmire at (202) 358-1983 or Catherine Watson at (757) 864-6122.*

ITEM #2: LASER DETECTS EYE DISEASE
Hope for finding eye disease before surgery is required. *For more information contact Mike Braukus at (202) 358-1979 or Lori Rachul at (216) 433-8806..*

ITEM #3: INTERVIEW -- DR. RAFAT R. ANSARI, PROJECT SCIENTIST
Discusses the benefits of the laser diagnostic probe.

Video news files will air today at noon and 3 p.m. EDT.

NASA Television is broadcast on Spacenet 2, transponder 5, channel 9, C-Band, located at 69 degrees West longitude, with horizontal polarization. Frequency is on 3880.0 megahertz, with audio on 6.8 megahertz.

- end -

REPRODUCED AT GOVT. EXPENSE

News Release

National Aeronautics and
Space Administration

Washington, DC 20546
(202) 358-1600

Michael Braukus
Headquarters, Washington, DC
(Phone: 202/358-1979)

Lori Rachul
Lewis Research Center, Cleveland, OH
(Phone: 216/433-8806)

For Release
November 27, 1996

RELEASE: 96-248

NASA-DEVELOPED LASER MAY DETECT SERIOUS EYE DISEASE EARLY

Ophthalmologists may be able to trace the early symptoms of eye diseases and spot cataracts before they are severe enough to require surgery thanks to an agreement between NASA and the National Institutes of Health (NIH)/National Eye Institute (NEI).

The agreement will use the unique talents and experience of both agencies to explore the use of a NASA-developed laser light scattering diagnostic probe for early detection and diagnosis of eye diseases such as cataracts, diabetic retinopathy, and the inflammatory diseases of the anterior chamber of the eye.

The goal of this agreement is to perfect and test the NASA advanced fiber optic eye diagnostic system's ability to detect the early subtle changes during the development of cataracts and other eye diseases. The second goal is to evaluate, assess and apply the instrumentation in a broader spectrum of uses for laser light scattering that would benefit eye research at NIH and the external biomedical community.

The NASA-developed laser light scattering diagnostic probe has already been used in experiments investigating cataracts during the early stages of formation. The instrument is nearly ready for clinical trials.

The fiber optic probe—about the size of a pencil—can detect protein crystals suspended in the fluid inside the eyes. Ophthalmologists suspect that it is these crystallins that form the cloudy mass that leads to cataracts. Without having to penetrate the eye, the probe allows for the study of the eye's anterior chamber, lens and posterior chamber.

The research conducted between NASA and NEI on this fiber optic probe could allow ophthalmologists to trace the beginnings of eye diseases and invent treatments to combat them before they reach a stage where surgical intervention is necessary. The agreement will allow characterization of the instrument, aiding in its eventual commercial acceptance and FDA approval, and ensuring its eventual availability in the biomedica community.

-end-

News Release

National Aeronautics and
Space Administration

Washington, DC 20546
(202) 358-1600

Don Savage
Headquarters, Washington, DC
(Phone: 202/358-1547)

Jane Platt
Jet Propulsion Laboratory, Pasadena, CA
(Phone: 818/354-5011)

For Release
November 27, 1996

RELEASE: 96-249

ODDBALL ASTEROID CAPTURED ON NEW VIDEO COMPUTER SIMULATION

A new computer-generated video visualization is giving planetary scientists a fresh look at the topsy-turvy rotation of the intriguing asteroid Toutatis, which is due to pass near Earth on Nov. 29.

Dr. Eric De Jong and animator Shigeru Suzuki of NASA's Jet Propulsion Laboratory (JPL), Pasadena, CA, combined several computer simulation and scientific visualization techniques to show the bizarre rotation and surface details of Toutatis as it tumbles erratically on its journey around the Sun. The video includes images of Toutatis from various vantage points, including the perspective of someone standing on its surface. In addition, trajectories and explosive surface impacts are shown for a more typical near-Earth asteroid, named Castalia.

The animation was created at the JPL Digital Image Animation Laboratory (DIAL) from a model based on a previous sequence of delay-Doppler radar images. Those images were recorded at NASA's Deep Space Network 70-meter and 34-meter radio/radar antennas in Goldstone, CA, and the 305-meter Arecibo Radio Telescope in Puerto Rico.

"It's amazing that the shape of Toutatis can be determined so accurately from ground-based observations," De Jong said. "This technology will provide us with startling, close-up views of thousands of asteroids that orbit near the Earth."

Dr. Scott Hudson of Washington State University, Pullman, WA, collaborated on the venture, along with scientists at NASA's Ames Research Center, Mountain View, CA. "We used the computer to mathematically create a three-dimensional model of the surface and rotation of Toutatis," Hudson said. "It's as though we put a clay model in space and molded it until it matched the appearance of the actual asteroid."

-more-

The video is of particular interest as Toutatis nears Earth and makes its closest approach on Friday, Nov. 29, when it will pass by at a distance of 3.3 million miles (5.3 million kilometers), or about 14 times the distance from the Earth to the Moon. In 2004, Toutatis will pass only four lunar distances from Earth, closer than any known Earth-approaching object expected to pass by in the next 60 years.

However, "Toutatis poses no significant threat to Earth, at least for a few hundred years," according to JPL senior research scientist Dr. Steven Ostro, who observed Toutatis in 1992 and is studying the asteroid once again this week at Goldstone.

Discovered in 1989 and named after a Celtic god, the asteroid Toutatis has dimensions of 2.9 by 1.5 by 1.2 miles (4.6 by 2.4 by 1.9 kilometers.) It is considered one of the strangest bodies in the Solar System, given its peculiar rotation and odd shape, which resembles two chunks of rock connected by a narrow neck-like structure. The rocky body's strange traits are believed to be the result of a history of violent collisions.

Asteroids, sometimes known as minor planets, are small orbiting bodies composed of rock and metals. They hold special fascination for scientists because of their age, quantity and proximity to the Earth. Scientists estimate that there are more than 100,000 near-Earth asteroids larger than a football stadium.

"The discovery that we live in an asteroid swarm is important for the future of humanity," said Ostro. "These leftover debris from planetary formation can teach us a good deal about the formation of our Solar System. Asteroids also contain valuable minerals and many are the cheapest possible destinations for space missions."

For example, a flyby of the asteroid McAuliffe is planned by the first flight mission in NASA's New Millenium Program, which is designed to test and apply new technologies for use in future space science and Earth science missions. New Millennium is managed by JPL for NASA's Offices of Space Science and Mission to Planet Earth, Washington, DC.

In addition, NASA's Near Earth Asteroid Rendezvous (NEAR) mission, launched in February 1996, is en route to the asteroid Eros, which it will orbit beginning in January 1999.

Additional information on Toutatis and other asteroids is available at the following websites:

http://echo.jpl.nasa.gov

http://www.eecs.wsu.edu/~hudson/asteroids.html.

-end-

News Release

National Aeronautics and
Space Administration
Washington, DC 20546
(202) 358-1600

For Release
November 27, 1996

Douglas Isbell
Headquarters, Washington, DC
(Phone: 202/358-1753)

Diane Ainsworth
Jet Propulsion Laboratory, Pasadena, CA
(Phone: 818/354-5011)

RELEASE: 96-250

MARS GLOBAL SURVEYOR SOLAR PANEL WILL NOT HINDER MISSION GOALS

Mission engineers studying a solar array on NASA's Mars Global Surveyor that did not fully deploy during the spacecraft's first day in space have concluded that the situation will not significantly impair Surveyor's ability to aerobrake into its mapping orbit, or affect its performance during the cruise and science portions of the mission.

The solar panel under analysis is one of two 11-foot (3.5-meter) wings that were unfolded shortly after the Nov. 7 launch and are used to power Global Surveyor. Currently, the so-called -Y direction array is tilted 20.5 degrees away from its fully deployed and latched position.

"After extensive investigation with our industry partner, Lockheed Martin Astronautics, using a variety of computer-simulated models and engineering tests, we believe the tilted array poses no extreme threat to the mission," said Glenn Cunningham, Mars Global Surveyor project manager at NASA's Jet Propulsion Laboratory (JPL), Pasadena, CA. "We plan to carry out some activities in the next couple of months using the spacecraft's electrically driven solar array positioning actuators to try to gently manipulate the array so that it drops into place. Even if we are not able to fully deploy the array, we can orient it during aerobraking so that the panel will not be a significant problem."

Diagnosis of the solar array position emerged from two weeks of spacecraft telemetry and Global Surveyor's picture-perfect performance during the first trajectory maneuver, which was conducted on Nov. 21. The 43-second burn achieved a change in

-more-

spacecraft velocity of about 60 miles per hour (27 meters per second), just as expected. The burn was performed to move the spacecraft on a track more directly aimed toward Mars, since it was launched at a slight angle to prevent its Delta third-stage booster from following a trajectory that would collide with the planet.

Both the telemetry data and ground-based computer models indicate that a piece of metal called the "damper arm," which is part of the solar array deployment mechanism at the joint where the entire panel is attached to the spacecraft, probably broke during the panel's initial rotation and was trapped in the two inch space between the shoulder joint and the edge of the solar panel, Cunningham said.

Engineers at JPL and Lockheed Martin Astronautics, Denver, CO, are working to develop a process to clear the obstruction by gently moving the solar panel. The damper arm connects the panel to a device called the "rate damper," which functions in much the same way as the hydraulic closer on a screen door acts to limit the speed at which the door closes. In Global Surveyor's case, the rate damper was used to slow the motion of the solar panel as it unfolded from its stowed position.

Engineers have been re-evaluating the aerobraking phase of the Global Surveyor mission, which begins in September 1997 after the spacecraft is captured into an elongated orbit around the planet using its on-board rocket engine. The solar arrays are essential to the aerobraking technique and will be used to drag the spacecraft into its final, circular mapping orbit. First tested on the Magellan spacecraft at Venus, aerobraking allows the spacecraft to carry less fuel to a planet and take advantage of its atmospheric drag to gradually lower itself into the correct orbit.

"Since we launched early in our window of opportunity, we will not have to aerobrake as fast to reach the mapping orbit, and this reduces the amount of heating that the solar panels are exposed to," Cunningham said. "In the event that our efforts to latch the solar array properly in place are not successful, this reduced heating should allow us to tilt the array in such a way to prevent it from folding up and yet still provide enough useful aerobraking force." Additional analysis and testing will be performed over the next several months to verify this hypothesis.

Meanwhile, Mars Global Surveyor continues to perform very well as it completes its first two weeks in space, with on-going science instrument calibrations being performed this week. At the same time, the Mars Relay radio transmitter has been turned on for a post-launch checkout. Radio amateurs around the world are gearing up to participate in a radio tracking experiment in which they will become receiving stations for the low-power beacon signal transmitted by the Mars Relay radio system.

Mars Global Surveyor is approximately 3.4 million miles (5.5 million kilometers) from Earth today, traveling at a speed of about 74,000 miles per hour (119,000 kilometers per hour) with respect to the Sun.

Mars Global Surveyor is the first mission in a sustained program of robotic exploration of Mars, managed by JPL for NASA's Office of Space Science, Washington, DC.

-end-

[Note to Editors: A line-drawing of Mars Global Surveyor showing the current position of the solar panel in its fully deployed position, including a blow-up which shows the area in which the broken deployment mechanism is located, can be found under "News Flashes" on JPL's World Wide Web home page using the following URL: http://www.jpl.nasa.gov]

VideoAdvisory

National Aeronautics and
Space Administration

Washington, D.C. 20546
(202) 358-1600

For Release
November 29, 1996

Deanna Corridon
Headquarters, Washington, DC
(Phone: 202/358-1733)

VIDEO ADVISORY: V96-144

MARS PATHFINDER SPACECRAFT READIES FOR LAUNCH

On Friday the NASA TV Video File will include a compilation of animation and B-roll for the Mars Pathfinder Launch scheduled for December 2, at 2:09 a.m. EST. The Mars Pathfinder spacecraft will land on Mars July 4, 1997, where it will investigate the geology/composition of rocks and soil, study the Martian atmosphere and provide meteorological data on surface weather. NASA TV also will replay new computer-generated animation of asteroid Toutatis developed from radar data gathered by NASA's Deep Space Network antennas in Goldstone, CA, and the Arecibo Radio Telescope in Puerto Rico. Toutatis is due to pass near Earth on Nov. 29.

ITEM #1: MARS PATHFINDER
Compilation of B-roll and animation. *For more information contact Doug Isbell at (202) 358-1753, George Diller at (407) 867-2468, or Diane Ainsworth (818) 354-5011.*

ITEM #2: REPLAY - ASTEROID TOUTATIS ANIMATION
Computer-generated animation depicting the topsy-turvy rotation of Toutatis. *For more information contact Don Savage (202) 358-1547 or Jane Platt at (818) 354-5011.*

Video news files will air today at noon and possibly 3 p.m. EDT.

NASA Television is broadcast on Spacenet 2, transponder 5, channel 9, C-Band, located at 69 degrees West longitude, with horizontal polarization. Frequency is on 3880.0 megahertz, with audio on 6.8 megahertz.

- end -

NASA News

National Aeronautics and
Space Administration

John F. Kennedy Space Center
Kennedy Space Center, Florida 32899
AC 407 867-2468

For Release:

Dec. 1, 1996

George H. Diller
407/867-2468

NASA LAUNCH ADVISORY:
MARS PATHFINDER LAUNCH POSTPONED TO DEC. 3

The launch of NASA's Mars Pathfinder spacecraft aboard a McDonnell Douglas Delta II rocket has been postponed 24 hours due to forecast weather conditions associated with an approaching cold front. There is a 90% probability of not meeting the launch weather criteria due to wind, thick low clouds and showers or thunderstorms. On Tuesday the probability decreases to only a 10% chance of weather criteria violation.

The launch time on Tuesday, Dec. 3, is 2:03:07 a.m.

The time for all press activities will remain the same. Media should meet at the Gate 1 Pass & Identification Building on Cape Canaveral Air Station at 5:45 p.m. on Monday, Dec. 2, for the Delta photo opportunity at Complex 17. Departure for Press Site 1 to cover launch will occur at 12:30 a.m. on Tuesday, Dec. 3.

NASA Television coverage remains planned to begin at 12 midnight.

###

George H. Diller
Kennedy Space Center
407/867-2468

Dec. 3, 1996

DELTA/MARS PATHFINDER LAUNCH ADVISORY

The launch of Mars Pathfinder aboard a McDonnell Douglas Delta II rocket was postponed today one minute thirty three seconds before launch. A propulsion console in the blockhouse lost synchronization with a launch-mandatory alarm system. This alarm system assures that no launch parameters are out of limit during the final four minutes of the countdown.

Pending resolution of the problem, the launch has been rescheduled for Wednesday, Dec. 4 at 1:58:07 a.m. A meeting will be held early Tuesday to determine launch readiness.

There is a 90% chance of acceptable launch weather conditions on Wednesday morning.

###

News Release

National Aeronautics and
Space Administration

Washington, DC 20546
(202) 358-1600

Sarah Keegan
Headquarters, Washington, DC
(Phone: 202/358-1600)

For Release
December 3, 1996

STATEMENT FROM DR. WESLEY HUNTRESS, ASSOCIATE ADMINISTRATOR, OFFICE OF SPACE SCIENCE, ON CLEMENTINE ICE DISCOVERY

"Today's announcement by a joint DoD-NASA science team that data from the Clementine mission suggest the existence of ice in the permanently shaded south polar region of the Moon is exciting news. This is especially true for the NASA-Lockheed Martin team working on the development of the Lunar Prospector spacecraft, a NASA Discovery Program mission scheduled for launch in September 1997.

Beyond the pure scientific significance of water ice being able to cling to such a dry and harsh environment, its existence on the Moon could be a key ingredient in the support of future human lunar exploration, due to its potential value as a source of the components of rocket fuel.

Lunar Prospector will use a different, more direct technique in an attempt to confirm this finding. It will employ two neutron spectrometers to measure the amount of hydrogen on the lunar surface and its location, to an accuracy of 50 parts-per-million. This will permit scientists to infer the presence or absence of ice with greater precision than possible via the innovative but indirect method used by the Clementine team."

- end -

VideoAdvisory

National Aeronautics and
Space Administration

Washington, D.C. 20546
(202) 358-1600

For Release
December 6, 1996

Deanna Corridon
Headquarters, Washington, DC
(Phone: 202/358-1733)

VIDEO ADVISORY: V96-145

UNEARTHING THE SECRETS OF THE NILE; NIFTY SHUTTLE LANDING SHOTS

On Friday the NASA TV Video File will feature images of the Nile River in Egypt taken by the Spaceborne Imaging Radar C/X-Band Synthetic Aperture Radar (SIR-C/X-SAR). The image reveals an ancient river channel buried under the Sahara Desert in Africa which means that the river once flowed through the largest and driest desert on Earth. The discovery of the river channel will enable scientists to better understand what controls the course of the river and help predict Nile behavior, which is critical because the river is essential to millions of people.

SEE THE SHUTTLE LAND AS THE PILOT SEES IT, LIVE ON NASA TELEVISION AT 8:03 A.M. EST.

ITEM #1: SECRETS OF THE NILE
SIR-C images of the Nile River. *For more information contact Doug Isbell at (202) 358-1753 or Mary Hardin at (818) 354-5011.*

ITEM #2: SIR-C/X-SAR FOOTAGE
Animation depicting how the instrument collects data and B-roll of the launch of the instrument.

ITEM #3: INTERVIEW - DR. BOB STERN, UNIVERSITY OF TEXAS AT DALLAS
Discusses the radar images of the Nile.

Video news files air daily at noon 3, 6 and 9 p.m. EDT.

NASA Television is broadcast on Spacenet 2, transponder 5, channel 9, C-Band, located at 69 degrees West longitude, with horizontal polarization. Frequency is on 3880.0 megahertz, with audio on 6.8 megahertz.

- end -

News Release

National Aeronautics and
Space Administration

Washington, DC 20546
(202) 358-1600

Douglas Isbell
Headquarters, Washington, DC
(Phone: 202/358-1753)

Mary Hardin
Jet Propulsion Laboratory, Pasadena, CA
(Phone: 818/354-5011)

Dave Schulz
University of Texas at Dallas
(Phone: 972/883-2293)

For Release
December 6, 1996

RELEASE: 96-251

SPACE RADAR UNEARTHS SECRETS OF THE ANCIENT NILE

One of the many great mysteries of the Nile river may be solved with the discovery of an ancient river channel buried under layers of sand in the Sahara Desert in Africa.

The buried river channel was revealed in images taken by the Spaceborne Imaging Radar C/X-Band Synthetic Aperture Radar (SIR-C/X-SAR) that flew twice on the Space Shuttle Endeavour in 1994. The radar images were processed at NASA's Jet Propulsion Laboratory (JPL), Pasadena, CA, and the University of Texas at Dallas (UTD).

"One of the things this discovery helps us examine is the origin of what's called the Great Bend of the Nile," said Dr. Bob Stern, a SIR-C science team member at UTD. "The Nile generally flows due north, but in the Sudan, it makes a huge, looping bend that is really remarkable because the river is flowing through the Sahara Desert, the largest, driest desert on the face of the Earth. There must be a very good reason for the river to make this great bend, otherwise we would expect it to flow straight to the Mediterranean Sea." Instead, it bends southwestwards and wanders through the Sahara for another 200 miles before resuming its northward course.

"The discovery of the river channel shows us that probably sometime between 10,000 and 1,000,000 years ago, the Nile was forced to abandon its bed and take up a new course to the south. This buried channel proves that this region has been tectonically active and shows us how this activity has forced the river to change its course," Stern said. "Understanding what controls the course of the Nile is a critical part of understanding Nile history and predicting Nile behavior, which is important because the river is essential to millions of people in Egypt, Sudan, and Ethiopia."

-more-

A scientific paper on the discovery written by Stern and co-authored with UTD geologist Dr. Mohamed Gamal Abdelsalam appears in the Dec. 6 issue of Science magazine. The discovery grew out of research that the scientists have been doing on plate tectonics and the formation of a "supercontinent" more than 600 million years ago.

"Our original experiment involved studying ancient structures in Precambrian rocks that formed where two supercontinents collided hundreds of millions of years ago. In the course of our study, we became interested in how these structures influenced the course of the Nile," explained Stern.

It was the tantalizing radar images of the area hidden beneath the sands of the Sahara that turned the scientists' work in a new direction.

"This discovery wouldn't have happened without SIR-C/X-SAR imagery. Our work in northeast Africa would have been limited to what we could see on the ground or could be seen in satellite photographs. The radar is much more efficient in getting information from these sand covered areas because the radar waves are able to penetrate the sand. SIR-C/X-SAR imagery has revealed a huge piece of the Earth's surface -- an area that's never been seriously explored before," Stern noted.

"This is one of the most exciting discoveries from the SIR-C/X-SAR mission to date. I expect we'll continue to be surprised by fascinating results like these as the science team continues to analyze the radar data," said Dr. Diane Evans, the SIR-C project scientist at JPL. "More and more we are finding the radar data have applications to answer questions about the Earth that were not originally anticipated."

SIR-C/X-SAR is a joint mission of the United States, German and Italian space agencies. JPL built and manages the SIR-C portion of the mission for NASA's Office of Mission to Planet Earth, a program to study the Earth's land, oceans, atmosphere and life as a total, integrated system.

-end-

A still color image to illustrate this release is available to news media by contacting the Headquarters Imaging Branch at 202/358-1900. The photo number is 96-HC-754.

News Release

National Aeronautics and
Space Administration

Washington, DC 20546
(202) 358-1600

Debra Rahn
Headquarters, Washington, DC
(Phone: 202/358-1778)

Eileen Hawley
Johnson Space Center, Houston, TX
(Phone: 281/483-5111)

For Release
December 6, 1996

RELEASE: 96-252

WETHERBEE TO LEAD INTERNATIONAL CREW ON SEVENTH SHUTTLE/MIR MISSION

Astronaut James D. Wetherbee (Capt., USN) will command an international crew on STS-86, the seventh of nine planned missions to dock the Space Shuttle with Russia's Mir space station. STS-86 is targeted for a September 1997 launch.

Joining Wetherbee on Atlantis' flight deck will be Pilot Mike Bloomfield (Major, USAF), a member of the 1995 astronaut class. Mission Specialists are Scott Parazynski, MD, Vladimir Titov (Col., Russian Air Force) of the Russian Space Agency and Jean-Loup Chretien (Brigadier-General, French Air Force) of the French Space Agency, CNES.

Previously named to the crew is Wendy Lawrence (Cmdr., USN), who will remain on Mir for a four-month research mission as a member of the Mir 23 and 24 crews. Lawrence will replace astronaut Mike Foale who will end his four-month stay as part of the Mir 23 crew and return to Earth on board Atlantis as a member of the STS-86 crew.

STS-86 reunites three members of the STS-63 crew which performed the first rendezvous of an American spacecraft with Mir in 1995. Wetherbee, Titov and Foale were members of Discovery+s mission in which the Shuttle approached to within 37 feet (ten meters) of Mir in a dress rehearsal for the first Shuttle/Mir docking.

Highlights of the 9-day mission include five days of docked operations between Atlantis and Mir and the exchange of crew members Foale and Lawrence to continue a permanent American presence of the Russia complex. A spacewalk is scheduled to retrieve the four Mir Environmental Effects Payloads which were attached to the Mir's docking module by Linda Godwin and Rich Clifford during STS-76 to characterize the environment surrounding the Mir space station. Atlantis will carry the SPACEHAB double module to support the transfer of logistics and supplies for Mir and the return of experiment hardware and specimens to Earth.

-more-

"We're very pleased with the selection of Jim Wetherbee to command this crew," said David C. Leestma, Director, Flight Crew Operations. "His involvement with the entire human space flight programs and his flight experience provide him with an excellent background for this challenging mission."

Wetherbee, who is currently Deputy Director of Johnson Space Center, will be making his fourth space flight on STS-86. He flew as pilot on STS-32 in 1990 and was the commander for STS-52 in 1992 and STS-63 in 1995.

Bloomfield will be making his first space flight during STS-86 following the successful completion of more than a year of training and technical assignments to prepare for assignments to a Shuttle mission. STS-86 makes the second space flight for Parazynski, who previously few on STS-66 in 1994.

Titov is a veteran Russian cosmonaut with three space flights and more than one year of accumulated time spent in space. During a previous flight on Mir, Titov spent a full year in orbit, at that time a human endurance record. He will become the first Russian cosmonaut to fly more than one mission on the Space Shuttle.

Chretien also is a veteran space flyer having spent more than 32 days in space on two flights on Russian space stations. He was a member of the 1982 Salyut 7 crew, spending more than one week in orbit. He flew again as a member of a Mir crew in 1988, spending more than three weeks in space. STS-86 will be Chretien+s third space flight, his first on the Space Shuttle.

For complete biographical information on the STS-86 crew, or any astronaut, see the NASA Internet biography home page at URL:http://www.jsc.nasa.gov/Bios/

-end-

VideoAdvisory

National Aeronautics and
Space Administration

Washington, D.C. 20546
(202) 358-1600

For Release
December 9, 1996

Deanna Corridon
Headquarters, Washington, DC
(Phone: 202/358-1733)

VIDEO ADVISORY: V96-146

SPACE STATION...ONE STEP CLOSER TO COMPLETION

On Monday the NASA TV Video File will televise B-roll of the completion of the first module to make up the International Space Station by Khrunichev Industries. The module, or Functional Cargo Block (FGB) will be launched from Baikonur, Russia, in November, 1997, and will provide initial power and propulsion for the International Space Station. NASA TV also will replay images of the Nile River in Egypt taken by the Spaceborne Imaging Radar C/X-Band Synthetic Aperture Radar (SIR-C/X-SAR) revealing an ancient river channel buried under the Sahara

ITEM #1: ONE STEP CLOSER
B-roll of the module assembly. *For more information contact Michael Braukus at (202) 358-1979 or Kyle Herring at (713) 483-5111.*

ITEM #2: REPLAY - SECRETS OF THE NILE
SIR-C images of the Nile River. *For more information contact Doug Isbell at (202) 358-1753 or Mary Hardin at (818) 354-5011.*

ITEM #3: REPLAY - SIR-C/X-SAR FOOTAGE
Animation depicting how the instrument collects data and B-roll of the launch of the instrument.

ITEM #4: REPLAY - INTERVIEW - DR. BOB STERN, UNIVERSITY OF TEXAS AT DALLAS
Discusses the radar images of the Nile.

Video news files air daily at noon 3, 6 and 9 p.m. EDT.

NASA Television is broadcast on Spacenet 2, transponder 5, channel 9, C-Band, located at 69 degrees West longitude, with horizontal polarization. Frequency is on 3880.0 megahertz, with audio on 6.8 megahertz.

- end -

News Release

National Aeronautics and
Space Administration

Washington, DC 20546
(202) 358-1600

For Release

December 9, 1996

Michael Braukus
Headquarters, Washington,
(Phone: 202/358-1979)

Kyle Herring
Johnson Space Center, Houston, TX
(Phone: 281/483-5111)

Kari Kelley
Boeing Public Relations, Houston, TX
(Phone: 281/283-4844)

RELEASE: 96-253

STATION'S FIRST MODULE ASSEMBLED; READY FOR TESTING

The first major component of the International Space Station (ISS) has been completed on schedule and on budget.

Russia's Khrunichev Industries, working under contract to NASA's ISS prime contractor, The Boeing Company, has completed assembly of the Functional Cargo Block, or FGB, which will be launched in one year and will provide initial power and propulsion for the ISS.

The FGB, a 20-ton pressurized spacecraft, will be launched on a Russian Proton vehicle in November 1997.

"The first piece of Space Station is on track and will be ready to launch in just twelve months," said Virginia Barnes, FGB program manager. "The people of Khrunichev worked hard to make this happen, and we are all excited to be playing such a crucial role in this new chapter of space exploration."

In May 1997, the FGB will be transported from Moscow to the Baikonur launch complex, where it will undergo final checkout and testing, and be mated to the Proton rocket.

"Most of the subsystem hardware has been installed including the propulsion system, the onboard computers, lighting power supply, solar array orientation system, thermal controls, fire detection, and guidance, navigation and control," said Barnes. "The subsystems will now undergo functional testing until the FGB is transported to the launch site."

-more-

A week after the FGB launch, an interconnecting node module, built by Boeing in Huntsville, AL, will be launched from the Kennedy Space Center, FL, aboard a Space Shuttle. Astronauts will link the two modules in space, signaling the beginning of the largest space-based construction project in history. The FGB will provide orbital control, communications and power to the node.

During this period, the FGB will control the motion and define the altitude of the Station's orbit. Later in the assembly sequence of the Station, as additional modules are added, the FGB will serve as a storage and experimentation facility. In addition, its external fuel tanks will continue to be used throughout the lifetime of the Station.

"This is an exciting time for the FGB team," said Barnes. "In the next 12 months we will be preparing to launch and to unite our two countries in building the International Space Station."

In August 1995, Boeing Defense & Space Group and Russia's Khrunichev State Research and Production Space Center, signed a $190 million contract for all phases of development and production of the spacecraft.

-end-

News Release

National Aeronautics and
Space Administration

Washington, DC 20546
(202) 358-1600

For Release

Beth Schmid
Headquarters, Washington, DC
(Phone: 202/358-1600)

December 10, 1996

Carlos Fontanot
Johnson Space Center, Houston, TX
(Phone: 281/483-5111)

RELEASE: C96-n

INFORMATION DYNAMICS, INC. AWARDED CONSOLIDATED TELEVISION ENGINEERING AND IMAGERY SUPPORT CONTRACT

The NASA Johnson Space Center (JSC) has awarded a potential seven-year contract with an annual value of approximately $14 million for sustained television engineering and communications support for the Space Shuttle and Space Station programs at JSC to Information Dynamics, Inc., (IDI) of Washington, DC. The contract also includes responsibility for information and imagery support for JSC.

The contract, under which work is scheduled to begin on Jan. 1, 1997, includes a two-year base period, two two-year extension options and one one-year extension option. The contract will consolidate work that is currently performed under individual contracts with Hernandez Engineering, Inc., Media Services, and Taft Broadcasting, all from Houston, TX, and RMS Photographic Services, of Webster, TX. Media Services is a subcontractor to IDI. It is anticipated that a significant part of the incumbent workforce will become part of IDI.

Other companies that had submitted proposals for the contract included Enterprise Advisory Services, Inc., GB Tech, Inc. and StellaCom, Inc., all of Houston; and HP Services, Inc. of Webster, TX.

-end-

News Release

National Aeronautics and
Space Administration
Washington, DC 20546
(202) 358-1600

Douglas Isbell
Headquarters, Washington, DC
(Phone: 202/358-1753)

Mary Beth Murrill
Jet Propulsion Laboratory, Pasadena, CA
(Phone: 818/354-5011)

For Release
December 10, 1996

NOTE TO EDITORS: N96-79

NEW GANYMEDE RESULTS FROM GALILEO TO BE PRESENTED

New details about Jupiter's moon Ganymede - and a preview of the Galileo spacecraft's upcoming flyby of the Jovian moon Europa -- will be discussed at a press briefing on Thursday, Dec. 12, at 2 p.m. EST (11 a.m. PST) originating from NASA's Jet Propulsion Laboratory, Pasadena, CA. The briefing will be carried live on NASA Television.

The briefing will include the debut of spacecraft data that has been translated into an audio recording to allow scientists to hear the particle activity that Galileo's instruments measured during two close flybys of Ganymede earlier this year. Scientists also will discuss findings to be published in the scientific journal Nature this week regarding Ganymede's interior and the magnetic environment that surrounds the large, icy moon.

New images taken by the spacecraft, in addition to new animation illustrating Galileo's recent discoveries, will be shown.

Galileo scientists will then describe plans to study Europa, the Jovian moon that may have a liquid ocean beneath its ice crust, during the spacecraft close pass of the moon on Dec. 19 at 1:53 a.m. EST (Dec. 18 at 10:53 p.m. PST.) The flyby will occur at an altitude of just 433 miles.

NASA Television is available through the Spacenet 2 satellite on transponder 5, channel 9, 69 degrees West longitude, frequency 3880 MHz, audio subcarrier 6.8 MHz, horizontal polarization. Two-way question and answer capability will be available to reporters at participating NASA centers.

-end-

News Release

National Aeronautics and
Space Administration
Washington, DC 20546
(202) 358-1600

Dwayne Brown
Headquarters, Washington, DC
(Phone: 202/358-1726)

Lori Rachul
Lewis Research Center, Cleveland, OH
(Phone: 216/433-8806)

For Release
December 10, 1996

NOTE TO EDITORS: N96-80

SIGNING CEREMONY TO INITIATE DEVELOPMENT OF REVOLUTIONARY AIRCRAFT ENGINES

The development of revolutionary aircraft engines and the huge potential for the U.S. general aviation industry will be the focus of a signing ceremony and media availability next week. NASA Administrator Daniel S. Goldin will welcome Members of Congress, government officials and aviation industry executives to the ceremony at 2 p.m. EST, Monday Dec. 16, in the NASA Headquarters auditorium, 300 E Street SW, Washington, DC.

Two companies, Williams International, Walled Lake, MI, and Teledyne Continental Motors, Mobile, AL, have been selected as part of NASA's General Aviation Propulsion (GAP) program to develop technologies and manufacturing processes for revolutionary, low-cost, environmentally-compliant general aviation propulsion systems and test them on advanced aircraft.

GAP works in concert with the NASA/FAA/Industry Advanced General Aviation Transport Experiments (AGATE) Consortium which is developing advanced cockpit and airframe technologies. Both AGATE and GAP will promote U.S. economic growth by supporting the revitalization of the general aviation industry in the global market place.

U.S. general aviation serves 17,800 airports, provides the only air transportation for millions of people to many communities throughout the U.S. and the world and provides hundreds of thousands of U.S. jobs.

The ceremony will be shown live on NASA television, Spacenet 2, 69 degrees West longitude, transponder 5 Channel 9, frequency 3880 MHz, horizontal polarization. Two-way question and answer capability for media will be provided by participating NASA centers.

-end-

News Release

National Aeronautics and
Space Administration

Washington, DC 20546
(202) 358-1600

For Release

Debra Rahn
Headquarters, Washington, DC
(Phone: 202/358-1639)

December 11, 1996

Rob Navias
Johnson Space Center, Houston, TX
(Phone: 281/483-5111)

NOTE TO EDITORS: N96-81

BRIEFINGS SET FOR NEXT SHUTTLE-MIR DOCKING MISSION

A series of briefings on the next flight of the Shuttle Atlantis to link up to the Russian space station Mir will be held at the Johnson Space Center (JSC), Houston, TX, on Friday, Dec. 20. The briefings will be broadcast live on NASA Television.

The first mission of 1997, STS-81 is targeted for launch around January 12 to carry six astronauts into orbit, including Jerry Linenger, who will become the fourth U.S. astronaut to conduct research on Mir. Linenger will replace John Blaha, who arrived on the Mir in September as part of the STS-79 crew. Blaha will return home aboard Atlantis.

The briefings will begin on Dec. 20 at 10 a.m. EST (all times listed are EST) with an overview of the Shuttle-Mir Phase One Program, followed at 11 a.m. with the Mission Overview briefing, conducted by STS-81 Lead Flight Director Bill Reeves. The NASA TV Video File will air at noon. The briefings will resume at 1 p.m. with the SPACEHAB briefing, followed at 1:30 p.m. with the briefing on the KidSat experiment. The briefings will wrap up with the STS-81 Crew News Conference at 3 p.m.

Individual round-robin interviews with the STS-81 astronauts will be held after the crew news conference for reporters attending the briefings at JSC and for those who make special arrangements in advance to conduct interviews by phone. Reporters interested in round-robin interviews with the STS-81 astronauts should contact Eileen Hawley at 281/483-5111 by close of business on Dec. 18. The round-robin interviews will not be seen on NASA TV.

NASA Television is carried on Spacenet 2, Transponder 5, Channel 9 at 69 degrees West longitude, horizontal polarization, frequency 3880 Mhz, audio 6.8 Mhz. Two-way question and answer capability will be available for media at participating NASA Centers.

-more-

STS-81 Briefings (all times are EST)

10 a.m.	Phase One Overview (JSC) Jim Van Laak, Phase One Deputy Program Director Dr. John Charles, NASA-Mir Mission Scientist
11 a.m.	Mission Overview (JSC) Bill Reeves, STS-81 Lead Flight Director
12:00 p.m.	NASA Television Video File (NASA HQ)
12:30 p.m.	Mission Update Program (JSC)
1 p.m.	Spacehab Overview (JSC) Mike Bain, Shuttle-Mir Program Manager, SPACEHAB
1:30 p.m.	KidSat Overview (JSC) Pam Mountjoy, Education Program Manager, NASA HQ Phyllis Grounds, Electronic Still Camera Project Manager, JSC
3:00 p.m.	STS-81 Crew News Conference (JSC) Mike Baker, Commander (CDR) Brent Jett, Pilot (PLT) Jeff Wisoff, Mission Specialist 1 (MS 1) John Grunsfeld, Mission Specialist 2 (MS 2) Marsha Ivins, Mission Specialist 3 (MS 3) Jerry Linenger, Mission Specialist 4 (MS 4-up)

-end-

VideoAdvisory

National Aeronautics and
Space Administration

Washington, D.C. 20546
(202) 358-1600

For Release
December 12, 1996

Deanna Corridon
Headquarters, Washington, DC
(Phone: 202/358-1733)

VIDEO ADVISORY: V96-147

AMBER WAVES OF SPACE GRAIN; SHUTTLE ENGINE TECHNOLOGY IMPROVES FUEL EFFICIENCY

On Thursday the NASA TV Video File will include an interview of Astronaut John Blaha and "Good Morning America." Blaha is currently doing research on the effects of gravity on dwarf wheat grown aboard the Russian Mir Space Station. The wheat study is important considering plants might eventually be involved in life support systems in space. In addition to today's file, there will be B-roll of a Boeing 777 equipped with Shuttle engine technology which has led to the design of a more fuel-efficient jet engine.

Please also note that Thursday at 2:00 P.M. there will be a Galileo Space Science Update about new results gathered by the Galileo spacecraft's fly-by of Jupiter's moon's Ganymede, Callisto and Europa. Supporting video will be shown on the Video File.

ITEM #1: INTERVIEW - JOHN BLAHA
Talks with Good Morning America about his experiments onboard the Mir Space Station.

ITEM #2: FIRST SPACE CROP
Footage of the first crop of healthy plants grown through their complete life cycle aboard the Mir Space Station.

ITEM #3: SPACE HARVEST
Footage includes John Blaha's wheat experiment from Nov. 13, 1996 and IMAX footage of the Mir Space Station.

ITEM #4: SPACE WHEAT
The wheat is the first crop developed specifically for growth in space.

ITEM #5: INTERVIEW - FRANK SALISBURY, PRINCIPAL INVESTIGATOR
Discusses the Super-Dwarf Wheat experiment onboard Mir and Utah State University's involvement in the experiment. *For more information contact Michael Braukus at (202) 358-1979.*

ITEM #6: CUTTING AIRLINE COSTS
Footage of the Boeing 777 and Shuttle engine testing.

ITEM #7: INTERVIEW - STEPHEN GADDIS, NASA ENGINEER
Discusses the turbine efficiency testing at the Marshall Space Flight Center, Huntsville, AL. *For more information contact Dave Drachlis at (205) 544-0034.*

Video news files air daily at noon 3, 6 and 9 p.m. EDT.

NASA Television is broadcast on Spacenet 2, transponder 5, channel 9, C-Band, located at 69 degrees West longitude, with horizontal polarization. Frequency is on 3880.0 megahertz, with audio on 6.8 megahertz.

-end-

News Release

National Aeronautics and
Space Administration
Washington, DC 20546
(202) 358-1600

Jim Cast
Headquarters, Washington, DC
(Phone: 202/358-1779)

June Malone
Marshall Space Flight Center, Huntsville, AL
(Phone: 205/544-0034)

For Release
December 12, 1996

RELEASE: 96-254

APPLYING NASA SHUTTLE ENGINE TEST FINDINGS MAY SAVE AIRLINES MILLIONS IN FUEL COSTS

Results from tests aimed at improving the performance of NASA's Space Shuttle engines are expected to save airlines millions of dollars in fuel costs each year.

The tests, performed at NASA's Marshall Space Flight Center in Huntsville, AL, have led to improvements in the design of a new, more fuel-efficient jet engine for the Boeing 777.

A full half-percent was gained in energy efficiency -- meaning a savings of hundreds of gallons of fuel per flight and annual savings of millions of dollars for the airline industry.

Tests performed at Marshall's turbine airflow test facility in 1992 were a joint project by NASA and Pratt & Whitney, a leader in commercial and military aircraft engine design and manufacturing.

Analyzing the test results, engineers noticed that the information showed the effects of small fluttering "wakes" of gases -- the unsteadiness of gases flowing through the turbine airfoils -- on turbine efficiency. A turbine is a mechanical device used to provide power or thrust in rockets or jet engines. The turbine is similar in concept to a household fan: The fan rotates with blades on a shaft, just as a turbine rotates on a shaft with layers of blades, called airfoils.

Engineers explored the existence of an "optimum position" for the turbine airfoils, which could mean less energy to drive the turbines, resulting in lower engine temperatures, longer-lasting hardware, less maintenance time and lower operational costs.

Marshall and Pratt & Whitney engineers then repeated the initial tests, this time for the engine of the wide-bodied Boeing 777 aircraft, which was to be put into commercial service in 1995.

-more-

Stephen Gaddis, project engineer in Marshall's Structures and Dynamics Laboratory where the tests were conducted, explained, "Wakes flowed through the turbine airfoils, coming out high in some places, low in others. We knew if we could align the airfoils or wakes, we could also get the peaks and valleys to align -- all for better turbine efficiency."

The principle is much like one used by competitors in bicycle races: A cyclist will move in behind another racer to benefit from "drafting" created by the front cyclist. The biker in front serves to break the winds' force, so the cyclist in the rear does not have to pedal as hard as the leader. Pratt & Whitney took these findings and modified their PW-4084 engine for the Boeing 777.

"We had been looking for ways to achieve efficiency improvement," said Frank W. Huber, manager of turbine aerodynamics for Pratt & Whitney's Government Engine Division in West Palm Beach, FL. "The clocking concept -- the aligning of the airfoils -- was not new, but there were not sufficient data to validate this technique."

"The tests at Marshall demonstrated that the concept worked -- clearly showing the benefit of aligning the turbine airfoils," said Huber. "We ultimately found that we could achieve significant improvement in engine performance."

Technology developed by NASA has given Pratt & Whitney and the Boeing Company a competitive edge in world markets, with an aircraft engine that can realize substantial fuel savings.

Today, both government and private industry researchers are using the Marshall test results to fine-tune the large, electricity-generating turbines used by America's electric companies, in an effort to save fuel.

-end-

News Release

National Aeronautics and
Space Administration
Washington, DC 20546
(202) 358-1600

Douglas Isbell
Headquarters, Washington, DC
(Phone: 202/358-1753)

Mary Beth Murrill
Jet Propulsion Laboratory, Pasadena, CA
(Phone: 818/354-5011)

For Release
December 12, 1996

RELEASE: 96-255

BIG ICY MOON OF JUPITER FOUND TO HAVE A 'VOICE' AFTER ALL; EUROPA FLYBY NEXT FOR GALILEO

Jupiter's big moon Ganymede is not only the size of a planet -- it sounds like one too, as heard in audio recordings made from data returned by NASA's Galileo spacecraft released today.

Characterized by a soaring whistle and hissing static, Ganymede's song reveals that the Solar System's largest moon is also the only one known to possess a planet-like, self-generated magnetic cocoon called a magnetosphere, which shields the moon from the magnetic influence of its giant parent body, Jupiter.

Published in the scientific journal *Nature* this week, these new Galileo findings and other measurements from several Galileo sensors were presented today in a news briefing held at NASA's Jet Propulsion Laboratory (JPL), Pasadena, CA. Taken together, scientists say the new Ganymede findings are painting a portrait of a body that from the inside out closely resembles a planet like Earth rather than other moons in the Solar System.

"The data we get back is in the form of a spectrogram, and reading it is kind of like looking at a musical score," said Dr. Donald Gurnett, University of Iowa physicist and principal investigator on Galileo's plasma wave instrument. It was his experiment that first detected the telltale signals of a magnetosphere during the spacecraft's close flybys of that moon on June 27 and Sept. 6.

Gurnett said the unique pattern of frequencies his instrument detected is characteristic of a magnetosphere and closely matches his previous studies of the magnetospheres of Earth, Saturn and Jupiter. "The instant I saw the spectrogram, I could tell we had passed through a magnetosphere at Ganymede," Gurnett said.

-more-

Describing the electromagnetic wave activity that his experiment detected at Ganymede, Gurnett said the approach to the large moon was relatively quiet, "until all of a sudden, there's a big burst of noise that signals the entry into Ganymede's magnetosphere. Then, for about 50 minutes, we detected the kinds of noises that are typical of a passage through a magnetosphere. As we exited the magnetosphere, there was another big burst of noise."

Gurnett checked with Dr. Margaret Kivelson of the University of California at Los Angeles (UCLA), principal investigator for the magnetometer experiment on the spacecraft. Kivelson confirmed the detection of a large increase in magnetic field strength near Ganymede. Related data from the two close flybys have confirmed that Ganymede has a magnetic field of its own.

Using extremely precise data from tracking the spacecraft, investigators on Galileo's celestial mechanics team also have been able to confirm that Ganymede's interior is differentiated, probably having a three-layer structure. "These data show clearly that Ganymede has differentiated into a core and mantle, which is in turn enclosed by an ice shell," said JPL planetary scientist Dr. John Anderson, team leader on the Galileo radio science experiment.

"Combined with the discovery of an intrinsic magnetic field, our gravity results indicate that Ganymede has a metallic core about 250 to 800 miles in," said Anderson. "This is surrounded by a rocky silicate mantle, which is in turn enclosed by an ice shell about 500 miles thick. Depending on whether the core is pure iron or an alloy of iron and iron sulfide, it could account for as little as 1.4 percent or as much as one-third of the total mass of Ganymede."

This differentiated structure is the most likely cause of Ganymede's newly discovered magnetic field, which in turn gives rise to the magnetosphere, reported UCLA geophysicist Dr. Gerald Schubert, an interdisciplinary investigator on Galileo's science team. Scientists suspect Ganymede's magnetic field is generated the same way as Earth's, through the dynamo action of the fluid mantle rotating above a metallic core. The only other solid bodies in the Solar System known to have magnetic fields are Mercury, Earth and possibly Jupiter's volcanic moon Io.

"At Ganymede, the magnetic field is strong enough to carve out a magnetosphere with clearly defined boundaries within Jupiter's magnetosphere, making it the only 'magnetosphere within a magnetosphere' known in the Solar System," Kivelson said.

The strong magnetic characteristics of Ganymede, in combination with its residence within Jupiter's powerful magnetosphere, make the Jovian environment even more intriguing, said Galileo project scientists Dr. Torrence V. Johnson. "The physics taking place within Jupiter's magnetosphere are of great interest to scientists attempting to understand the complex interplay of magnetic forces and matter throughout the universe," he said.

-more-

Data from the plasma wave instrument can be heard and seen on the Galileo home page at the following URL:

http://www.jpl.nasa.gov/galileo

Newly received Galileo images of Jupiter's moon Callisto and one of Europa also were released at the briefing. Scientists were surprised by the lack of small craters visible in the images. Some small craters appear to have been softened or modified by downslope movement of debris, revealing ice-rich surfaces.

Galileo's next moon encounter occurs Dec. 18-19, when the spacecraft makes its first close approach to Europa, the moon thought to harbor a liquid ocean beneath its icy surface. Results from that flyby will be radioed to Earth starting in the last half of December through early February.

The Europa image received from the spacecraft earlier this week shows the cracked surface of this moon in greater detail than it has been seen before. The new image shows an area 150 miles by 140 miles that has been highly disrupted by fractures and ridges.

Arizona State University planetary scientist Dr. Kelly Bender of Galileo's imaging team said that symmetric ridges in the dark bands suggest that Europa's surface crust was separated and filled with darker material, somewhat analogous to spreading centers in the ocean basins of Earth. Although some impact craters are visible, their general absence indicates a youthful surface, she said.

The youngest ridges, such as the two features that cross the center of the picture, have central fractures, aligned knobs, and irregular dark patches. These and other features could indicate cryovolcanism, or processes related to eruption of ice and gases.

Galileo was launched in 1989 and entered orbit around Jupiter Dec. 7, 1995. The Galileo mission is managed by JPL for NASA's Office of Space Science, Washington, DC.

-end-

News Release

National Aeronautics and
Space Administration
Washington, DC 20546
(202) 358-1600

Michael Braukus
Headquarters, Washington, DC
(Phone: 202/ 358-1979)

For Release
December 12, 1996

David Morse,
Ames Research Center, Mountain View, CA
(Phone: 415/604-4724)

Lynnette Harris
Utah State University, Logan, UT
(Phone: 801/797-1359)

RELEASE: 96-256

NASA HARVEST OF MIR SPACE WHEAT MARKS U.S.-RUSSIAN FIRST

U.S. astronaut John Blaha recently harvested the first crop of healthy plants grown through a complete life cycle in the microgravity of space aboard the Russian space station Mir, according to NASA scientists.

Called "Project Greenhouse," the 32 plants, a super-dwarf wheat variety involved in this experiment, are part of a joint cooperative initiative with NASA; Utah State University, Logan, UT; the Institute of Biomedical Problems Research Center in Moscow; and the Space Research Institute of the Bulgarian Academy of Sciences in Sofia. Unlike previous short-term experiments, these plants were allowed to develop at a normal growth rate and appear to have matured fully to produce the desired seed-containing heads, project scientists report.

"Harvest of this wheat on Mir represents the first time that an important agricultural crop and primary candidate for a future plant-based life support system has successfully completed an entire life cycle in the space environment," said Dr. David Bubenheim, project co-investigator at NASA's Ames Research Center, Mountain View, CA.

"The development of plant-based, regenerative life support systems is critical to sustaining a crew during long-duration missions such as Mars exploration," he continued. "Successful growth of the wheat crop through all developmental phases, culminating in the harvest of seeds, demonstrates that the environment of space poses no obstacles to the biological components of a regenerative life support system. This information is critical for the future application of these systems to recycle wastes and provide a crew with water, air and food. This, in turn, makes the crew self-sufficient, thereby enabling the practical and economical exploration of space," Bubenheim concluded.

-more-

"Completion of a plant life cycle in microgravity would prove that there are no 'show stoppers' -- no stages in the life cycle that absolutely require gravity for completion," said Dr. Frank Salisbury, Principal Investigator, Utah State University. "Based on first-hand reports and videos of the plants growing aboard Mir, it appears that our super-dwarf wheat plants have achieved that critical goal," he concluded.

The plants were grown in "Greenhouse" Svet, a small growth chamber originally built in Bulgaria during the late 1980s according to a joint Russian/Bulgarian design. The hardware was sent to Mir in 1990. Svet has a compact growing area of about one square foot and can accommodate plants up to 16 inches tall. Fluorescent lamps provide light at about one fifth the intensity of sunlight, which is adequate for plant growth. The wheat was grown in a substrate material similar to kitty litter but loaded with plant nutrients. Water was injected directly into this material and transferred to the wheat seeds by a system of wicks. Day length and water injection into the plant growth medium were both controlled automatically to set points adjusted throughout the experiment by project scientists.

A key objective of Project Greenhouse is to determine the relative effects of the microgravity environment of space on plant growth versus other environmental factors. These include light, temperature, carbon dioxide and oxygen concentrations, water vapor, water availability, substrate moisture levels and cabin pressure. To that end, instrumentation built at Utah State University was sent to Mir and added to Svet to monitor the key environmental parameters of interest. Bulgarian collaborators added new lights and a new controller.

Additional information on the effect of environmental factors will be provided by a second experiment currently underway on Mir. Immediately following the first harvest, a second set of wheat seeds was planted. These plants will be frozen when about forty days old and returned to Earth for biochemical analysis. This will provide the first opportunity to analyze the biochemistry of growing green plants as they were in space, before their fast-paced biochemical processes have a chance to re-acclimate to Earth's gravity, according to project scientists.

- end -

EDITOR'S NOTE: Images to accompany this release are available to news media representatives by calling the Headquarters Imaging Branch on 202/358-1900.
NASA photo numbers are:

Color: 96-HC-748	B&W: 96-H-748
Color: 96-HC-749	B&W: 96-H-749
Color: 96-HC-750	B&W: 96-H-750
Color: 96-HC-751	B&W: 96-H-751
Color: 96-HC-752	B&W: 96-H-752
Color: 96-HC-753	B&W: 96-H-753

REPRODUCED AT GOVT. EXPENSE

News Release

National Aeronautics and
Space Administration
Washington, DC 20546
(202) 358-1600

For Release

Michael Braukus
Headquarters, Washington, DC
(Phone: 202/358-1979)

December 13, 1996

RELEASE: 96-257

PANEL REVIEW FINDS SPACE SHUTTLE SAFE

The Aerospace Safety Advisory Panel concluded after a six-month review that efforts to streamline the Space Shuttle Program have not increased risks, the panel reported today.

The review was requested on behalf of the President by the Office of Science and Technology Policy. The panel was tasked to review the issues associated with the safe operation and management of the Space Shuttle program arising from ongoing efforts to improve and streamline operations. These efforts include the transition to a comprehensive Space Flight Operations Contract, downsizing the Space Shuttle workforce and reducing costs of operations and management.

"I'm very pleased that the panel has given the Space Shuttle Program a clean bill of health," said NASA Administrator Daniel S. Goldin. "But the panel also pointed out some areas for continuing emphasis and the need to improve. NASA concurs with these findings and I have instructed the institutional management and the Space Shuttle Program to implement them as soon as possible. At NASA, safety is the bottom line. This report validates our actions and will guide us as we continue."

The panel's review included 22 recommendations, many of which address a need for NASA to take steps to ensure the availability of a skilled and experienced workforce in sufficient numbers to meet ongoing safety needs. The panel also noted that other activities occurring within the agency have the potential to generate safety problems. It cited specifically: a reduction-in-force during assembly of the International Space Station; and a concern that unrealistic funding levels and imposed schedules could place undue pressure on NASA and contractor management. The panel said that meeting the demands of these externally applied pressures can force decisions which increase risk.

-end-

NOTE TO EDITORS: Media representatives can arrange to obtain a copy of the report by calling the Headquarters newsroom at 202/358-1600.

News Release

National Aeronautics and
Space Administration
Washington, DC 20546
(202) 358-1600

David E. Steitz
Headquarters, Washington, DC
(Phone: 202/358-1600)

For Release
December 17, 1996

RELEASE: 96-260

1996 SEEN AS YEAR OF SPECTACULAR DISCOVERIES AND NEW CHALLENGES FOR NASA

A rock, a record, a rover and a new rocket were among the top NASA stories for 1996. Background material, video and still images are available to news media to illustrate these stories, with supporting material also available via the Internet and the World Wide Web.

LIFE ON MARS? TANTALIZING CLUES FROM AN ANCIENT ROCK

In an announcement that caused all humankind to take pause, NASA Administrator Daniel S. Goldin and a team of scientists revealed in August that a meteorite from Mars strongly suggested that primitive life may have existed on that planet more than 3 billion years ago. In a press conference at NASA Headquarters, a research team showed the world pictures of the first organic molecules thought to be of Martian origin; several features characteristic of biological activity, and possible microscopic fossils of primitive, bacteria-like organisms inside the ancient meteorite. In vowing to pursue the investigation of this historic discovery, Goldin said "The evidence is exciting, even compelling, but not conclusive. It is a discovery that demands further scientific investigation. NASA is ready to assist the process of rigorous scientific investigation and lively scientific debate that will follow this discovery." Goldin invited governments from around the globe to participate in the continuing investigation of the meteorite.

LUCID SETS U.S. RECORD FOR STAY IN SPACE

Astronaut Dr. Shannon Lucid set a new record for an American living in space and broke the world's record for a woman living in space by spending 181 days aboard the Russian Mir Space Station. Lucid, who conducted microgravity and life sciences experiments aboard the Mir with two Russian cosmonauts, returned to Earth aboard Space Shuttle Atlantis in November. President Clinton presented Lucid with the Congressional Space Medal of Honor in an early December ceremony, citing Lucid "for her contributions to international cooperation in space ... Shannon Lucid is an explorer in the best tradition of those who dare to challenge the unknown." Lucid's stay on Mir was part of continuing U.S. - Russian space cooperation, which is setting the foundation for the International Space Station.

-more-

TWO PROBES LAUNCHED TO STUDY THE RED PLANET

In a continuing effort to learn more about Mars, the United States launched two new spacecraft to the Red Planet in 1996. The Mars Global Surveyor and the Mars Pathfinder missions were both successfully launched from NASA's Kennedy Space Center, FL. Mars Global Surveyor, due to rendezvous with Mars in September of 1997, will spend four months dipping into Mars' atmosphere using a technique called "aerobraking." Starting in 1998, the Surveyor will begin compiling a systematic database as it surveys the Martian landscape and photographs unique features, such as polar caps and Mars' network of sinuous, intertwining river channels. Mars Pathfinder, set to land on Mars July 4, 1997, is designed to test the feasibility of a new low-cost method of delivering a spacecraft, science payload and free-ranging rover to the surface of the Red Planet. Once deployed, the lander will transmit back to Earth science data collected during descent through Mars' atmosphere. The rover, named Sojourner, will then activate an onboard camera and send back images to Earth, signifying the start of its exploration.

GALILEO UNRAVELS MYSTERIES OF JUPITER AND ITS MOONS

Mars was not the only planet to reveal startling new secrets in 1996. NASA's Galileo spacecraft, in its flyby and probe deploy at Jupiter, revealed many previously unknown facts about our Solar System's largest planet. Galileo's Probe, which was successfully sent into Jupiter's violent atmosphere in December 1995, provided new discoveries for NASA scientists. New information on the extent of water, clouds, and the chemical composition of Jupiter's atmosphere was revealed. As Galileo sped by Jupiter's moons, new details of the satellites began to emerge. On Ganymede, Jupiter's largest moon, scientists were intrigued by three-dimensional pictures of giant, icy fissures and evidence of a magnetic field. Galileo also reported that "warm ice" or even liquid water may have existed, and perhaps still exists, beneath the cracked icy crust of the moon Europa. Galileo found that the volcanically-active moon Io had noticeably changed since it was last observed 17 years ago by the Voyager spacecraft. In November, Galileo flew by Jupiter's moon Callisto, investigating the strange, pockmarked fourth moon, so different from its other active siblings.

HUBBLE SPACE TELESCOPE CONTINUES TO AMAZE ASTRONOMERS

Living up to its role as one of the "Great Observatories," the Hubble Space Telescope showed images of galaxies colliding, the surface of Pluto, and the birth of stars during 1996. In April, Hubble sent back dramatic images of gigantic tadpole-shaped objects surrounding a dying star. The "cometary knots" are probably the result of a dying star's final outbursts, seen in the Helix nebula. The Space Telescope continues on track for measuring the expansion of the universe, sending back information that fine-tunes the Hubble Constant. Scientists are using the telescope to try and place the Hubble Constant to within a ten percent accuracy. Compiling a "cosmic movie" of the Crab Nebula, Hubble found the Nebula even more dynamic than previously understood. Hubble measured the

diameters of a special class of pulsating star called Mira variables, which rhythmically change size. At 11 billion light-years away, they existed during the epoch when it is commonly believed galaxies started to form. Hubble concluded the gigantic, old stars are not round but rather egg-shaped. That discovery may preview the fate of our Sun five billion years from now. Hubble also surveyed the "homes" of quasars, showing that they live in a remarkable variety of galaxies, many of which are violently colliding. The complicated image Hubble sent back suggests there may be a variety of mechanisms for "turning on" quasars, the universe's most energetic objects. Hubble introduced us to images of what may be galaxies under construction in the early universe, being made out of a long sought ancient population of "galactic building blocks." Those images show a grouping of 18 gigantic star clusters that appear to be the same distance from Earth, and close enough to each other that they will eventually merge into a few galaxy-sized objects. In October, Hubble followed the spectacular dance of Jupiter's aurora, allowing astronomers to map Jupiter's immense magnetic field and better understand how it generates such phenomena.

NEXT GENERATION LAUNCH VEHICLE CHOSEN FOR DEVELOPMENT

In a quest for a faster, better, cheaper access to space in the 21st Century, Vice President Al Gore and Administrator Goldin announced that Lockheed Martin was selected to build the X-33 technology demonstration vehicle, a one-half scale prototype of the Reusable Launch Vehicle which will be used to demonstrate advanced technologies that will dramatically increase reliability and lower the costs of putting payloads into space. Lockheed Martin will design, build and conduct the first test flight of the X-33 test vehicle by March 1999, and conduct up to fifteen flights by December 1999. NASA has budgeted $941 million for the project through 1999, with Lockheed Martin contributing over $200 million. Called "VentureStar," the unpiloted vehicle will launch vertically like a rocket and land horizontally like an airplane.

-end-

NOTE TO EDITORS: More detailed information about this year's top NASA stories is available:

STORY	**INTERNET WORLD WIDE WEB URL**
Life on Mars:	http://www.jsc.nasa.gov/pao/flash/
Shannon Lucid:	http://shuttle-mir.nasa.gov/science/brochure/toc.html
New Mars Probes:	http://mpfwww.jpl.nasa.gov and http://www.jpl.nasa.gov/mgs
Galileo:	http://ccf.arc.nasa.gov/galileo_probe/
Hubble:	http://www.stsci.edu/pubinfo/Latest.html
X-33:	http://rlv.msfc.nasa.gov/x33/index.html
	PHOTOGRAPHS/IMAGES
Life on Mars:	96-H-514, Electron scanning microscope image of Mars meteorite
Shannon Lucid:	96-HC-666, Imax image of Lucid, 96-HC-711, Lucid with Russian Space Suit; 96-HC-659, Imax image of Lucid reading a book in space
New Mars Probes:	96-HC-725, Mars Global Surveyor; 96-HC-686, Mars Pathfinder
Galileo:	96-HC-682, Io; 96-HC-728, Europa; 96-H-432, Ganymede
Hubble:	96-HC-25, Egg Nebula; 96-HC-216, Cometary Knots; 96-HC-729, Quasars
X-33:	96-HC-735, X-33

For the latest news and information about NASA, please visit TODAY@NASA at URL:
http://www.hq.nasa.gov/office/pao/NewsRoom/today.html

News Release

National Aeronautics and
Space Administration

Washington, DC 20546
(202) 358-1600

For Release

Douglas Isbell
Headquarters, Washington, DC
(Phone: 202/358-1753)

December 17, 1996

Jerry Berg
Marshall Space Flight Center, Huntsville, AL
(Phone: 205/544-0034)

RELEASE: 96-261

ASTRONOMERS DETECT NEVER BEFORE SEEN GAMMA-RAY MULTI-BURSTS

The much-debated mystery of the source and origins of high-energy bursts of gamma rays observed in all directions in distant space has been given a puzzling new twist with the detection by NASA astronomers of the first sequence of repeated bursts in one region.

Four separate gamma-ray bursts were detected in two groups of two in rapid succession on October 27 and October 29, respectively. Astronomers based at NASA's Marshall Space Flight Center in Huntsville, AL, measured the unique sequence using the Burst and Transient Source Experiment (BATSE) instrument aboard NASA's Earth-orbiting Compton Gamma Ray Observatory, launched from the Space Shuttle Atlantis in April 1991. The repeated bursts are unlike any of the other 1,700 gamma-ray bursts observed by BATSE.

Marshall Space Sciences Laboratory astrophysicist Dr. Valerie Connaughton will present more details on the findings in a paper at the Texas Symposium on Relativistic Astrophysics in Chicago on Wednesday, December 18, at 4:15 p.m. CST at the Palmer House Hilton.

The BATSE finding is expected to prompt vigorous debate on subjects such as the distance to the sources of gamma-ray bursts and their causes -- subjects still debated by scientists despite nearly 25 years of study.

BATSE usually detects only about one gamma-ray burst per day, lasting from 10-30 seconds, and the locations of these events on the sky appear to be randomly distributed. "That's what makes these recent events so unusual," said Dr. Charles Meegan, BATSE experiment co-investigator. "They came right after one another, about two days apart, and all from the same part of the sky. Moreover, the last one was much longer than usual, lasting 23 minutes."

-more-

The BATSE astronomers cannot yet say for sure whether these events were produced by just one object in space, or several, but "it would be unlikely that this actually happened by chance" in four unrelated places, said Connaughton.

"Some astronomers argue for an explanation that the origin of these bursts is fairly local, just outside our own galaxy," said Dr. Gerald Fishman, BATSE principal investigator, who agrees that the recent events are likely related. "But most believe that bursts come from remote parts of the universe, at cosmological distances of a billion light years or more."

Another debated topic is how bursts are created. One theory suggests that bursts do not repeat from the same source because they involve a tremendous explosion that destroys the source in the process. Another possibility is that bursts occur when neutron stars merge, which would not be consistent with repeating bursts. "This discovery of multiple bursts adds fuel to the debate as to the source of the bursts," said Fishman.

The discovery was confirmed by three other gamma-ray burst detectors. Scientists from NASA's Goddard Space Flight Center in Greenbelt, MD, the University of California at Berkeley and the Ioffe Institute in Russia participated in the discovery.

The Texas Symposium on Relativistic Astrophysics is one of the most significant scientific forums for high energy astrophysics, and is being attended by leading astronomers from around the world, including Sir Martin Rees from Cambridge University. Dr. Rees is scheduled to present an invited talk on gamma-ray bursts at the meeting today.

Press contacts during the symposium are Don Sena of the Fermi National Accelerator Laboratory and Diana Steele of the University of Chicago, who can be reached at 312/917-1781, fax 312/917-1786. To arrange an interview with a NASA BATSE researcher at the symposium, Kelly McFalls of the Marshall Office of Public Affairs can be reached at that number.

The Burst and Transient Source Experiment is one of several instruments on NASA's Compton Gamma Ray Observatory. Other BATSE discoveries include a bursting pulsar, gamma rays from thunderstorms and eight new pulsars, and the observation of more than 1,700 gamma-ray bursts.

Further information on the mission and its accomplishments is available on the Internet home page of Marshall's Space Sciences Laboratory on the World Wide Web at URL:

http://www.ssl.msfc.nasa.gov

-end-

VideoAdvisory

National Aeronautics and
Space Administration

Washington, D.C. 20546
(202) 358-1600

For Release
December 18, 1996

Deanna Corridon
Headquarters, Washington, DC
(Phone: 202/358-1733)

VIDEO ADVISORY: V96- 149

HELICOPTER PILOTS FLY SAFER

On Wednesday's Video File will highlight flight tests NASA is conducting on a new collision avoidance radar system developed to help helicopter pilots fly more safely when operating close to the ground or in dangerous weather conditions. The system was designed by engineers at NASA Ames Research Center, Mountain View, CA, and Honeywell Military Avionics, Minneapolis, MN, to detect obstacles in the helicopter's flight path and provides a "display" in the cockpit to avoid them. Replaying on NTV will be new findings on gamma ray bursts detected by the Gamma Ray Observatory (GRO) and animation supporting NASA's selection of a contractor for a new airborne astronomical observatory called the Stratospheric Observatory for Infrared Astronomy (SOFIA) depicting the telescope viewing stellar objects in the Universe.

NASA Television also will replay NASA's top stories of 1996 for the rest the week. The stories include: Shannon Lucid spends a record breaking amount of time in space, scientists discover life on Mars, NASA sends two probes on their way to Mars, Galileo discoveries at Jupiter, Hubble images and NASA awards the X-33 contract.

ITEM #1: HELICOPTER PILOTS FLY SAFER
Animation of the automated computer display as well as helicopter B-roll.

ITEM #2: INTERVIEW - RICHARD ZELENKA, AEROSPACE ENGINEER
Discusses the unique capabilities of the new collision avoidance system. *For more information contact Don Nolan-Proxmire at (202) 358-1983 or Michael Mewhinney at (415) 604-3937.*

ITEM #3: REPLAY - GAMMA RAY BURSTS
Animation, B-roll, and interviews, of GRO data. *For more information contact Doug Isbell at (202) 358-1753.*

ITEM #4: REPLAY - SOFIA CONTACT AWARDED
Animation depicting the SOFIA viewing stellar objects. *For more information contact Doug Isbell at (202) 358-1753 or David Morse at (415) 604-4724.*

ITEMS #5-10: REPLAY - NASA...A YEAR IN REVIEW

Video news files air daily at noon, 3, 6 and 9 p.m. EST.

NASA Television is broadcast on Spacenet 2, transponder 5, channel 9, C-Band, located at 69 degrees West longitude, with horizontal polarization. Frequency is on 3880.0 megahertz, with audio on 6.8 megahertz.

- end -

News Release

National Aeronautics and
Space Administration
Washington, DC 20546
(202) 358-1600

For Release

December 18, 1996

Don Nolan-Proxmire
Headquarters, Washington, DC
(Phone: 202/358-1983)

Michael Mewhinney
Ames Research Center, Mountain View, CA
(Phone: 415/604-3937)

RELEASE: 96-262

NEW COLLISION AVOIDANCE SYSTEM HELPS HELICOPTER PILOTS

NASA has conducted flight tests of a new collision avoidance radar system intended to help helicopter pilots fly more safely when operating close to the ground or in poor weather conditions.

Developed by engineers at NASA's Ames Research Center, Mountain View, CA, and Honeywell Military Avionics, Minneapolis, MN, the new 35 GHz Millimeter-Wave (MMW) Radar Forward Sensor is designed to detect obstacles in an aircraft's flight path and provides a cockpit display to help avoid them. Although developed for helicopters, the new radar system has potential uses for all aircraft.

"Collision avoidance is of concern to all aircraft, requiring the detection of hazardous terrain or obstacles in sufficient time for clearance maneuvers," said Richard Zelenka, group leader for NASA's Automated Nap-of-the-Earth (NOE) Program.

"The collision avoidance requirement is even more demanding for helicopters, as their unique capabilities result in extensive operations at low altitude, near to terrain and hazardous obstacles," he said.

Although existing cockpit "enhanced vision" systems are acceptable for final approach and landing, they are insufficient for general flight operations, particularly helicopter missions and systems requiring automated warnings, according to Zelenka.

Military helicopter pilots, for example, who often fly below tree level, face unique guidance and control tasks, such as aircraft concealment, obstacle avoidance and real time mission planning. These tasks require a high degree of pilot concentration, which is intensified during bad weather and during stressful tactical situations. "Automation of some of these tasks can reduce pilot workload, while enhancing safety," Zelenka said.

-more-

"Although the program originally had a military focus, some of the technological advances inherent for automating NOE flight have significant potential for civil applications as well, such as emergency medical service helicopters, conventional and high-speed transports, remotely-piloted aircraft and planetary vehicles," Zelenka said. Other potential users include aerial firefighters, search and rescue aircraft and helicopters serving unique roles, such as oil rig helicopter operators.

Flight tests of the collision avoidance system were recently conducted aboard the NASA/Army Rotorcraft Aircrew Systems Concepts Airborne Laboratory (RASCAL) UH-60 research helicopter. The RASCAL is equipped with satellite navigation systems, digital data recorders, panel-mounted displays in the cockpit and crew area and a Silicon Graphics imaging system for generating high fidelity graphics. The new radar system was mounted on the nose of the aircraft and a color video camera was mounted adjacent to the radar to document the test conditions.

"By using existing 4.3 GHz radar altimeter components to perform the sensor's transmit and receive functions, the system will yield a low-cost, highly-reliable radar system," said Larry Almsted, Honeywell Program Manager. "Our emphasis has been on affordability from the beginning," Almsted added. The radar altimeter signal is converted to 35 GHz and transmitted as a scanning, three-dimensional pencil-beam through a small twist-reflector type antenna measuring only nine inches in diameter.

Flight tests were conducted over flat and moderately rugged mountainous terrain. While airborne, the new radar system constructed a database of the terrain and obstacles it detected in the aircraft's flight path and produced a three-dimensional synthetic perspective grid panel display for the pilot. Zelenka said the new radar system also operates well in bad weather conditions such as fog or rain, when visibility is poor.

The new radar system and cockpit display have been developed under NASA's Automated NOE program, with the goal of developing technologies to improve the effectiveness and safety of low altitude helicopter missions.

-end-

News Release

National Aeronautics and
Space Administration
Washington, DC 20546
(202) 358-1600

Jim Cast
Headquarters, Washington, DC
(Phone: 202/358-1779)

Dom Amatore
Marshall Space Flight Center, Hunstville, AL
(Phone: 205/544-0031)

Ron Lindeke
Lockheed Martin Skunk Works, Palmdale, CA
(Phone: 805/572-4153)

For Release
December 18, 1996

RELEASE: 96-263

X-33 PROGRAM COMPLETES OPERATIONS REVIEW

For the second time in as many months, government and industry managers have successfully completed a Preliminary Design Review (PDR) for the X-33 technology demonstration program. This design review for the operations segment and ground systems segment of the X-33 represents the last in a series of PDRs.

The three day PDR conducted last week in California, with NASA and industry team members in attendance, confirmed readiness to begin detailed design of the X-33 Ground Support System and Launch Facility at Edwards Air Force Base, CA. Last month, a week-long PDR approved a baseline configuration for final detailed vehicle design and long-lead procurement. The next major milestones for the program are a series of Critical Design Reviews (CDRs) starting in January and culminating in an August Operations CDR. Construction of a 25-acre launch facility at Edwards is expected to begin in October 1997.

The X-33, a half-scale technology demonstrator, is scheduled to make as many as fifteen flights during a 10-month period, beginning in March 1999. Launched vertically from Edwards, it will fly up to 15 times the speed of sound at altitudes approaching 50 miles. Potential landing sites are located in California, Utah, Montana and the state of Washington. The flagship vehicle in the agency's Reusable Launch Vehicle (RLV) program, X-33 is intended to pave the way for a full scale, commercially-developed RLV after the turn of the century, which could dramatically reduce the cost of putting payloads into space.

- end -

News Release

National Aeronautics and
Space Administration

Washington, DC 20546
(202) 358-1600

For Release

Debra Rahn
Headquarters, Washington, DC
(Phone: 202/358-1639)

December 18, 1996

Bruce Buckingham
Kennedy Space Center, FL
(Phone: 407/867-2468)

RELEASE: 96-264

KSC EXTENDS MCDONNELL DOUGLAS PAYLOAD CONTRACT

NASA's Kennedy Space Center, FL, has awarded McDonnell Douglas Aerospace, Space and Defense Systems, Huntington Beach, CA, a two-year extension to its existing contract for payload ground operations services. The value of this option is $245.7 million.

This two-year extension is effective Jan. 1, 1997 and ends Dec. 31, 1998. This contract features options that will carry the contract period of performance through Dec. 31, 2001, and will bring the total contract value to $1.9 billion.

This is the fourth extension of the payload ground operations contract awarded to McDonnell Douglas since the original contract was initiated in January 1987.

Under the cost-plus-award-fee/incentive-fee performance based contract, McDonnell Douglas will continue to provide ground support, test and integration for payload operations at Kennedy Space Center.

- end -

Video Advisory

National Aeronautics and
Space Administration

Washington, DC 20546
(202) 358-1600

For Release
December 20, 1996

Deanna Corridon
Headquarters, Washington, DC
(Phone: 202/358-1733)

VIDEO ADVISORY: V96-150

MORE MOBILITY FOR STROKE AND KNEE PATIENTS

Friday's Video File will have footage of an innovative knee brace using space technology. The device, called Selectively Lockable Knee Brace, could mean quicker, less painful rehabilitation for stroke and knee injury patients by allowing movement of the knee. In addition, NASA TV will carry live the STS-81 pre-flight briefings beginning at 10 a.m. Eastern.

ITEM #1: BRACE YOURSELF

Engineers at NASA's Marshall Space Flight Center are using space technology for an improved knee brace.

ITEM #2: INTERVIEW -GARY HORTON, ORTHOTIST

Horton explains the benefits of the new Selectively Lockable Knee Brace. *For more information contact Dave Drachlis at 205/544-0034.*

ITEM #3: INTERVIEW - MIKE SHADOAN, NASA ENGINEER

Shadoan discusses the design of the Selectively Lockable Knee Brace. *For more information contact Dave Drachlis at 205/544-0034.*

Video news file today at noon, 6, 9 p.m. and midnight EST.

NASA Television is broadcast on Spacenet 2, transponder 5, channel 9, C-Band, located at 69 degrees West longitude, with horizontal polarization. Frequency is on 3880.0 megahertz, with audio on 6.8 megahertz.

-end-