NATIONAL AERONAUTICS AND SPACE ADMINISTRATION

Cassini Launch

Press Kit
October 1997

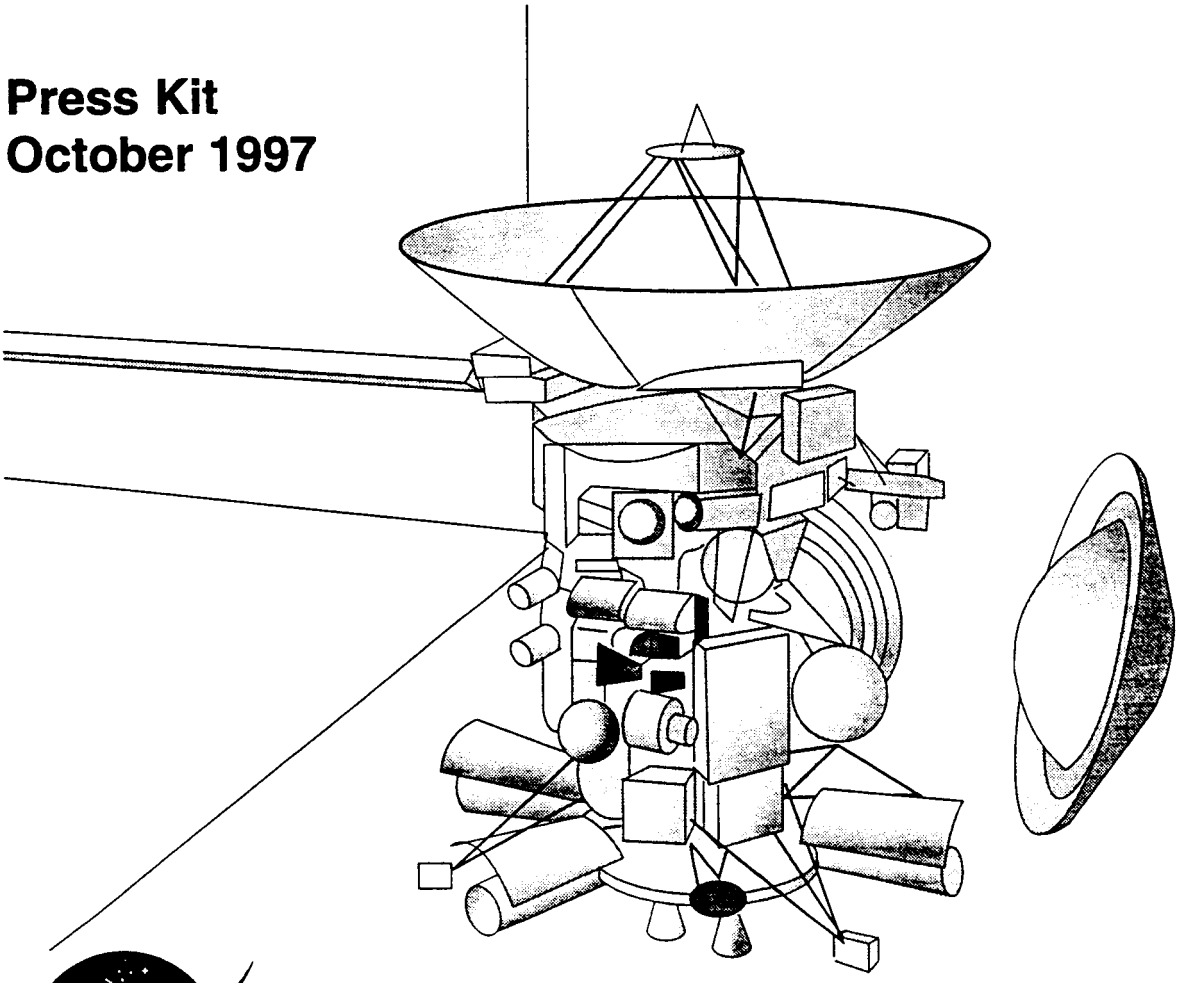

Contacts

Douglas Isbell Headquarters, Washington, DC	Policy/Program Management	202/358-1753
Donald Savage Headquarters, Washington, DC	Cassini Nuclear Safety	202/358-1727
Franklin O'Donnell Jet Propulsion Laboratory, Pasadena, CA	Cassini Mission	818/354-5011
Mary Beth Murrill Jet Propulsion Laboratory, Pasadena, CA	Cassini Mission and Nuclear Safety	818/354-6478
George Diller Kennedy Space Center, FL	Launch Operations	407/867-2468

Contents

General Release 3
Media Services Information 7
Quick Facts 8
Saturn at a Glance 9
Why Saturn? 11
The Saturn System 14
Mission Overview 33
Spacecraft 46
Science Objectives 57
Cassini's Nuclear Safety 65
The International Team 69

RELEASE:

CASSINI TO SURVEY REALM OF SATURN AND TITAN

The planet Saturn, its icy rings, the enigmatic moon Titan, other moons and the huge magnetic bubble that surrounds most of them are the prime scientific targets of the international Cassini mission, the most ambitious planetary exploration ever mounted. Final preparation of Cassini is now under way for a pre-dawn launch from Cape Canaveral, FL, on October 6, 1997.

The mission also entails the first descent of a probe to a moon of another planet, sending the Huygens probe to the surface of Saturn's moon Titan — by far the most distant landing ever attempted on another object in the solar system.

Cassini, in development since October 1989, is a cooperative endeavor of NASA, the European Space Agency (ESA) and the Italian Space Agency, or Agenzia Spaziale Italiana (ASI) . The mission will send a sophisticated robotic spacecraft equipped with 12 scientific experiments to orbit Saturn for a four-year period and to study the Saturnian system in detail. The ESA-built Huygens probe that will parachute into Titan's thick atmosphere carries another six scientific instrument packages.

"Saturn, with its rings, 18 known moons and its magnetic environment, is a lot like a solar system in miniature form," said Dr. Wesley T. Huntress, NASA's associate administrator for space science. "It represents an unsurpassed laboratory where we can look for answers to many fundamental questions about the physics, chemistry and evolution of the planets and the conditions that give rise to life. Cassini and the Huygens probe represent our best efforts yet in our ongoing exploration of the solar system."

The launch period for Cassini's nearly seven-year journey to Saturn opens on October 6 at 5:39 a.m. Eastern Daylight Time (09:39 Universal Time) and closes November 15, 1997. The launch window runs for 140 minutes each day and moves earlier by about six minutes daily. A U.S. Air Force Titan IVB/Centaur launch system, the most powerful launch vehicle in the U.S. fleet, will loft the Cassini spacecraft onto the interplanetary trajectory that will deliver the spacecraft to Saturn almost seven years later, on July 1, 2004. Cassini's primary mission concludes in July 2008.

In the early 1980s, the international science community selected a Saturn orbiter and Titan probe as the next logical step in the exploration of the solar system, similar to the Galileo mission to Jupiter. The Cassini orbiter and Huygens probe are the result of years of collaborative planning by space scientists and engineers in the United States and Europe.

Cassini is a follow-on mission to the brief reconnaissance of Saturn performed by the Pioneer 11 spacecraft in 1979 and the Voyager 1 and 2 encounters of 1980 and 1981. Those highly successful flybys produced volumes of new information, discoveries and questions about Saturn, its environs and its family of rings and moons. Those encounters, along with recent key

findings from the Hubble Space Telescope and ground-based observatories, continue to entice scientists who view the Saturnian system as a one-stop treasure trove with countless clues to the history of planetary and solar system evolution.

The mission is named for two 17th century astronomers. Italian-French astronomer Jean-Dominique Cassini (born Gian Domenico Cassini in his native Italy) made several key discoveries about Saturn between 1671 and 1684; he established that Saturn's rings are split largely into two parts by a narrow gap, known since as the Cassini Division. Dutch scientist Christiaan (cq) Huygens discovered Titan in 1655 and was responsible for many important Saturn findings.

Saturn is the second largest planet in the solar system. Like the other gaseous outer planets — Jupiter, Uranus and Neptune — its atmosphere is made up mostly of hydrogen and helium. Saturn's placid-looking, butterscotch-colored face masks a windswept atmosphere where jet streams blow at 1,100 miles per hour (1,800 kilometers per hour) and swirling storms roil just beneath the cloud tops. Spacecraft passing by Saturn found a huge and complex magnetic environment, called a magnetosphere, where trapped protons and electrons interact with each other, the planet, the rings and the surfaces of many of the moons.

The bright rings for which Saturn is best known have been found to consist of not just a few but hundreds of rings and ringlets, broad and thin, made up of ice and rock particles ranging in size from grains of sand to boxcars. The Voyager spacecraft observations in 1980 and 1981 found that the particles are herded into complicated orbits by the gravitational interaction of small moons unseen from Earth. Continuously jostled by their different orbital speeds and competing gravitational tugs from nearby moons and Saturn itself, the particles bump and grind away at each other, spreading out into a broad, thin sheet that is less than about 330 feet (100 meters) thick, but almost as broad as the distance between the Earth and its Moon. So-called "shepherd moons" were found orbiting near the edges of some rings. Like sheepdogs working the edges of a flock, these moons gravitationally herd in and contain ring particles that would otherwise spread out into deep space.

More moons of greater variety orbit Saturn than any other planet. These natural satellites range from Titan, which is larger than either Mercury or Pluto and nearly the size of Mars, to bodies so puny that astronomers call them "moonlets." There are likely many more moons than the 18 that have been confirmed.

Although it is believed to be too cold to support life, haze-covered Titan is thought to hold clues to how the primitive Earth evolved into a life-bearing planet. It has an Earth-like, nitrogen-based atmosphere and a surface that many scientists believe probably features chilled lakes of ethane and methane (which may also pool in subsurface reservoirs). Scientists believe that the moon's surface is probably coated with the residue of a sticky brown organic rain. Titan's orange haze chemically resembles smog, and it is thought to be composed of naturally occurring, smoke-like hydrocarbon particles. Standing on Titan's surface beneath this orange sky, a visitor from Earth likely would find a cold, exotic world with a pungent odor reminiscent of a petroleum processing facility. Huygens will provide our first direct sampling of Titan's

atmospheric chemistry and the first detailed photographs of its hidden surface.

In maneuvers called gravity-assist swingbys, Cassini will fly twice past Venus then once each past Earth and Jupiter on its way to Saturn. The spacecraft's speed relative to the Sun increases as it approaches and swings past each planet, giving Cassini the cumulative boost it needs to reach its ultimate destination.

On November 6, 2004, Cassini will release the disc-shaped Huygens probe toward Titan. After a three-week ballistic freefall toward Titan, the 8.9-foot-diameter (2.7-meter), battery powered Huygens will enter Titan's atmosphere, deploy its parachutes and begin its scientific observations. Data gathered during Huygens' 2-1/2-hour descent through Titan's dense atmosphere will be radioed to the Cassini spacecraft and relayed to Earth. Instruments on the descent probe will measure the chemistry, temperature, pressure, density and energy balance in the atmosphere. As the probe breaks through the cloud deck, a camera will capture panoramic pictures of Titan. Titan's surface properties will be measured, and more than 500 images of the clouds and surface will be returned. In the final moments of descent, a spotlight will illuminate the surface for spectroscopic measurements of its composition.

If the probe survives landing — which should occur at a fairly low speed of about 15 miles per hour (25 kilometers per hour) — it may return data from Titan's surface, where the atmospheric pressure is 1.6 times that of Earth's and the temperature is -290 F (-179 C). The exact conditions it will encounter are unknown; the probe could touch down on solid ground, rock-hard ice, or even splash down in a lake of ethane and methane. One instrument onboard will discern whether Huygens is bobbing in liquid, and other instruments onboard could measure the chemical composition of that liquid.

During the course of the Cassini orbiter's mission, it will execute more than 40 targeted close flybys of Titan, many as close as about 590 miles (950 kilometers) above the surface. This will permit high-resolution mapping of Titan's surface with the Titan imaging radar instrument, which can see through the opaque haze covering that moon to produce vivid photograph-like images.

The Cassini spacecraft, including the orbiter and Huygens probe, is the most complex interplanetary spacecraft ever built. Its sophisticated instruments are state-of-the-art and represent the best technical efforts of the United States and 16 European nations involved in the mission. Because of Cassini's challenging mission, long voyage and the value of its promised scientific return, each component and the system as a whole has undergone an unprecedented program of rigorous testing for quality and performance to assure the highest possible probability of mission success.

Because of the very dim sunlight at Saturn's orbit, solar arrays are not feasible. Electrical power is supplied to the orbiter by a set of radioisotope thermoelectric generators (RTGs), which convert the heat from the natural decay of plutonium-238, in the form of plutonium dioxide, to electricity for Cassini's systems. The same material is used in 117 radioisotope heater units (RHUs) placed on Cassini and Huygens to keep electronics systems at their operat-

ing temperatures. RHUs were most recently used on the Mars Pathfinder mission's Sojourner rover to keep the system from failing during cold Martian nights. Huygens will draw its electrical power from a set of five batteries during its entry and descent into Titan's atmosphere.

Telecommunications with Cassini during the mission will be carried out through the giant dish antennas of NASA's Deep Space Network, with complexes located in California, Spain and Australia. Cassini's high-gain antenna is provided by ASI. Data from the Huygens probe will be relayed to an ESA operations complex in Darmstadt, Germany.

Development of the Huygens probe was managed by an ESA team located at the European Space Technology and Research Center (ESTEC) in Noordwijk, the Netherlands. The Cassini orbiter was designed, developed and assembled at NASA's Jet Propulsion Laboratory (JPL), located in Pasadena, CA. JPL is a division of the California Institute of Technology. The overall mission is managed by JPL for NASA's Office of Space Science, Washington, DC.

[End of General Release]

Media Services Information

NASA Television Transmission

NASA Television is broadcast on the satellite GE-2, transponder 9C, C Band, 85 degrees west longitude, frequency 3880.0 MHz, vertical polarization, audio monaural at 6.8 MHz. The schedule for television transmissions for the Cassini launch will be available from the Jet Propulsion Laboratory, Pasadena, CA; Johnson Space Center, Houston, TX; Kennedy Space Center, FL, and NASA Headquarters, Washington, DC.

Status Reports

Status reports on mission activities for Cassini will be issued by the Jet Propulsion Laboratory's Public Information Office. They may be accessed online as noted below. Daily audio status reports are available by calling (800) 391-6654 or (818) 354-4210.

Launch Media Credentialing

Requests to cover the Cassini launch must be faxed in advance to the NASA Kennedy Space Center newsroom at (407) 867-2692. Requests must be on the letterhead of the news organization and must state the editor's assignment to cover the Cassini launch.

Briefings

A pre-launch briefing on the mission and science objectives of Cassini will be held at Kennedy Space Center is planned at 10 a.m. EDT on October 4, 1997.

Internet Information

Extensive information on Cassini, including an electronic copy of this press kit, press releases, fact sheets, status reports and images, is available from the Jet Propulsion Laboratory's World Wide Web home page at **http://www.jpl.nasa.gov/** . The Cassini Program also maintains a home page at **http://www.jpl.nasa.gov/cassini** .

Quick Facts

Spacecraft

Spacecraft dimensions: 22 feet (6.7 meters) high; 13.1 feet (4 meters) wide
Weight: 12,593 pounds (5,712 kilograms) with fuel, Huygens probe, adapter, etc; 4,685 pounds (2,125 kilograms) unfueled orbiter alone
Science instruments: camera; magnetic field studies; dust and ice grain analysis; infrared energy measurement; chemical composition of Saturn, its moons and rings; neutral and charged particle measurement; radar mapping; and radio wave searches
Power: 885 watts (633 watts at end of mission) from radioisotope thermoelectric generators

Huygens Probe

Probe dimensions: 8.9 feet (2.7 meters) in diameter
Weight: 705 pounds (320 kilograms)
Science instruments: spectrometer to identify atmospheric makeup; aerosol collector for chemical analysis; imager; sensors to measure atmospheric structure; wind speed measurements; sensors to measure conditions at impact site.

Launch Vehicle

Type: Titan IVB/ Centaur
Weight: 2.2 million pounds (1 million kilograms)

Mission

Launch: October 6-November 15, 1997 (primary period) from Cape Canaveral Air Station, FL. 140-minute window opens at 5:39 a.m. October 6. Opening of window moves about 6 minutes earlier daily thereafter
Venus flybys: April 21, 1998 at 190 mi (300 km); June 22, 1999 at 950 mi (1,530 km)
Earth flyby: August 17, 1999 at 500 mi (800 km) or higher
Jupiter flyby: December 30, 2000 at 6 million mi (10 million km)
Saturn arrival date: July 1, 2004
Huygens probe Titan entry date: November 27, 2004
Distance traveled to reach Saturn: 2.2 billion mi (3.5 billion km)
Saturn's average distance from Earth: 890 million mi (1.43 billion km)
One-way light time to Saturn during orbital tour: 68 to 85 minutes
Huygens' entry speed into Titan's atmosphere: about 12,400 mph (20,000 kph)

Program

Partners: NASA, the European Space Agency (ESA), Italian Space Agency (Agenzia Spaziale Italiana (ASI)); total of 17 countries involved
U.S. states in which Cassini work was carried out: 33
Number of people who have worked on some portion of Cassini/Huygens: More than 5,000
Cost of mission: $1.422B pre-launch development; $755M mission operations; $54M tracking; $422M launch vehicle; $500M ESA; $160M ASI; total about $3.3 billion

Saturn at a Glance

General

- ❑ One of five planets known to the ancients; Roman god of agriculture, also linked to Kronos, Greek god of time; father of Jupiter, king of the gods
- ❑ Yellowish color; at times the 5th brightest planet in night sky

Physical Characteristics

- ❑ Second largest planet in the solar system, after Jupiter
- ❑ Equatorial diameter 74,898 miles (120,536 kilometers) at cloud tops; polar diameter 67,560 miles (108,728 kilometers), making it the most oblate planet
- ❑ Density 0.69 (water = 1)
- ❑ Volume 764 times that of Earth, but only 95 times more massive

Orbit

- ❑ Sixth planet from the Sun, between Jupiter and Uranus
- ❑ Mean distance from Sun 890 million miles (1.43 billion kilometers)
- ❑ Brightness of sunlight at Saturn 1 percent of that at Earth
- ❑ Revolves around Sun once every 29.42 Earth years
- ❑ Saturn's interior rotates once every 10 hours, 39.4 minutes
- ❑ Poles tilted 29 degrees

Environment

- ❑ Saturn's atmosphere above the clouds is approximately 94 percent hydrogen and 6 percent helium
- ❑ Winds near Saturn's equator blow toward east at 1,100 miles per hour (500 meters per second)
- ❑ Temperature at Saturn's cloud tops -218 F (-139 C)

Previous Exploration

- ❑ Pioneer 11 flyby September 1, 1979
- ❑ Voyager 1 flyby November 12, 1980
- ❑ Voyager 2 flyby August 25, 1981

Rings

- ❑ Saturn's main ring system would barely fit in the space between Earth and its Moon
- ❑ B-ring often contains radial spokes of dust-sized material which are regenerated frequently
- ❑ Cassini Division between the B-ring and A-ring is sparsely populated with ring material
- ❑ E-ring is densest at the orbit of Enceladus and may be fed by Enceladus eruptions.

The Rings of Saturn

Ring	Distance	Width
D	41,610 mi (66,970 km)	4,690 mi (7,540 km)
C	46,300 mi (74,510 km)	10,870 mi (17,490 km)
B	57,170 mi (92,000 km)	15,890 mi (25,580 km)
A	75,910 mi (122,170 km)	9,080 mi (14,610 km)
F	87,100 mi (140,180 km)	30 mi (50 km)
G	105,740 mi (170,180 km)	300 to several 1,000s mi (500 to several 1,000s km)
E	112,000 mi (181,000 km)	188,000 mi (302,000 km)

Distance is from Saturn's center to closest edge of ring

The Known Moons of Saturn (18)

Moon	Diameter	Distance	Discoverer
Pan	10 mi (20 km)	83,004 mi (133,583 km)	1990: Showalter
Atlas	20 mi (32 km)	85,530 mi (137,640 km)	1980: Terrile (Voyager)
Prometheus	62 mi (100 km)	86,590 mi (139,350 km)	1980: Collins (Voyager)
Pandora	52 mi (84 km)	88,040 mi (141,700 km)	1980: Collins (Voyager)
Epimetheus	74 mi (119 km)	94,089 mi (151,422 km)	1966: Walker
Janus	111 mi (178 km)	94,120 mi (151,472 km)	1966: Dolfus
Mimas	244 mi (392 km)	115,280 mi (185,520 km)	1789: Herschel
Enceladus	310 mi (499 km)	147,900 mi (238,020 km)	1789: Herschel
Tethys	658 mi (1,060 km)	183,090 mi (294,660 km)	1684: Cassini
Telesto	14 mi (22 km)	183,090 mi (294,660 km)	1980: Smith
Calypso	12 mi (20 km)	183,090 mi (294,660 km)	1980: Smith
Dione	696 mi (1,120 km)	234,500 mi (377,400 km)	1684: Cassini
Helene	22 mi (35 km)	235,100 mi (378,400 km)	1980: Laques and Lecacheux
Rhea	949 mi (1,528 km)	327,490 mi (527,040 km)	1672: Cassini
Titan	3,200 mi (5,150 km)	759,220 mi (1,221,850 km)	1655: Huygens
Hyperion	176 mi (283 km)	920,300 mi (1,481,100 km)	1848: Bond
Iapetus	892 mi (1,436 km)	2,212,900 mi (3,561,300 km)	1671: Cassini
Phoebe	140 mi (220 km)	8,048,000 mi (12,952,000 km)	1898: Pickering

Pan "PAN"
Atlas "AT-luss"
Prometheus "pro-MEE-thee-uss"
Pandora "pan-DOR-uh"
Epimetheus "epp-ee-MEE-thee-uss"
Janus "JANE-uss"
Mimas "MY-muss"
Enceladus "en-SELL-uh-duss"
Tethys "TEE-thiss"
Telesto "tel-LESS-toe"
Calypso "kuh-LIP-soh"
Dione "DIE-oh-nee"
Helene "huh-LEE-nee"
Rhea "REE-uh"
Titan "TIE-tun"
Hyperion "high-PEER-ee-on"
Iapetus "eye-APP-eh-tuss"
Phoebe "FEE-bee"

Why Saturn?

Saturn offers a rich scientific environment to explore. The planet and the ring system serve as a physical model for the disc of gas and dust that surrounded the early Sun and from which the planets formed. The success of searches for other planetary systems elsewhere in our galaxy partly depends upon how well we understand the early stages of formation of planets.

Detailed knowledge of the history and processes now occurring on Saturn's elaborately different moons will provide valuable data for studying how each of the solar system's planets evolved to their present states. Represented among Saturn's collection of moons is a huge variety of chemical, geologic and atmospheric processes. Physics and chemistry are the same everywhere, and the knowledge gained about Saturn's magnetosphere or Titan's atmosphere will have applications here on Earth.

Chief among Cassini's goals within Saturn's system, however, is the unmasking of Titan.

After decades of speculation and experiment in the modern age, scientists still seek fundamental clues to the question of how life began on Earth. Most experts suspect that life arose by chance combinations of complex carbon compounds in a primeval soup. But all studies of life's origin are hampered by ignorance about the chemical circumstances on the young Earth.

In our solar system, only Earth and Titan have atmospheres rich in nitrogen. Earth's siblings in the inner solar system, Venus and Mars, possess carbon-dioxide atmospheres, while Jupiter and Saturn resemble the Sun in their high content of hydrogen and helium. Hydrocarbons like the methane present on Titan may have been abundant on the young Earth.

The importance of Titan in this connection is that it may preserve, in deep-freeze, many of the chemical compounds that preceded life on Earth. Some scientists believe we will find that Titan shares more in common with the early Earth than Earth itself does today.

The results from Cassini's instruments and the Huygens probe, along with the results of our continuing explorations of Mars, Europa and the variety of life-bearing environments on Earth, will significantly enhance scientific efforts to solve the mystery of our origins.

Cassini and Planetary Exploration

The Cassini-Huygens mission is an enterprise that, from the initial vision to the completion of the mission, will span nearly 30 years. The formal beginning was in 1982, when a joint working group was formed by the Space Science Committee of the European Science Foundation and the Space Science Board of the National Academy of Science in the United States. The charter of the group was to study possible modes of cooperation between the U.S. and Europe in the field of planetary science. Their precept was that the mission would be beneficial for the scientific, technological and industrial sectors of their countries. As a result of their involvement in the studies, European scientists proposed a Saturn orbiter and Titan probe

mission to the European Space Agency (ESA), suggesting a collaboration with NASA.

In 1983, the U.S. Solar System Exploration Committee recommended that NASA include a Titan probe and radar mapper in its core program and also consider a Saturn orbiter. In 1984-85, a joint NASA/ESA assessment of a Saturn orbiter-Titan probe mission was completed. In 1986, ESA's Science Program Committee approved Cassini for initial Phase A study, with a conditional start in 1987.

In 1987-88, NASA carried out further work on designing and developing the standardized Mariner Mark II spacecraft and a set of outer planets missions that would be accomplished with the new spacecraft line. The program was an early effort to reduce the costs of planetary exploration by producing multiple spacecraft for different missions but made with the basic spacecraft components off the same assembly line. Cassini and the Comet Rendezvous/Asteroid Flyby (CRAF) were the first two missions chosen for further study. At the same time in Europe, a Titan probe Phase A study was carried out by ESA in collaboration with a European industrial consortium led by Marconi Space Systems. The Titan probe was renamed Huygens by ESA as its first medium-sized mission of its Horizon 2000 space science program.

In 1989, funding for CRAF and Cassini was approved by the U.S. Congress. NASA and ESA simultaneously released announcements of opportunity for scientists to propose scientific investigations for the missions. In 1992, a funding cap was placed on the Mariner Mark II program, effectively ending the new spacecraft line and, at the same time, canceling the CRAF mission. Cassini was restructured to cut the cost of the mission and to simplify the spacecraft and its operation.

The design of Cassini is the result of extensive tradeoff studies which considered cost, mass, reliability, durability, suitability and availability of hardware. To forestall the possibility of mechanical failures, moving parts were eliminated from the spacecraft wherever the functions could be performed satisfactorily without them. Thus, early designs that included moving science instrument platforms or turntables were discarded in favor of instruments fixed to the spacecraft body, whose pointing requires rotation of the entire spacecraft. Tape recorders were replaced with solid-state recorders. Mechanical gyroscopes were replaced with hemispherical resonator gyroscopes. An articulated probe relay antenna was discarded in favor of using the high-gain antenna to capture the radio signal of the Huygens probe. A deployable high-gain antenna of the type used for Galileo was considered and abandoned.

Project engineers, both those who designed and built the hardware and those who operate the spacecraft, relied heavily on extensive past experience to provide a spacecraft design more sophisticated, reliable and capable than any other spacecraft ever built for exploration of the planets. Because of that care in design, the Cassini spacecraft is easier to operate and will return more scientific data about its targets than has been possible in any previous planetary mission.

The research and development that Cassini has funded has provided key technologies that have enabled many of NASA's new "faster, better, cheaper" missions. All of NASA's new

Discovery class missions such as Mars Pathfinder so far have used innovative technology derived from Cassini, and spacecraft being developed for NASA's New Millennium rely heavily upon fundamental new technologies brought forth by Cassini.

It is the ability to perform synergistic science that sets Cassini apart from other missions. The very complex interactions that are in play in systems such as those found at Jupiter and Saturn can best be addressed by instrument platforms such as Galileo and Cassini. Many phenomena to be studied are often sensitive to a large number of parameters; a measurement might have to take into account simultaneous dependencies on location, time, directions to the Sun and planet, the orbital configurations of certain moons, magnetic longitude and latitude and solar wind conditions. To deal with such complexity, the right types of instruments must be on the spacecraft to make all the necessary and relevant measurements, and all the measurements must be made essentially at the same time. Identical conditions very seldom recur. A succession or even a fleet of less well equipped spacecraft could not obtain the same result. The need for a broadly based, diverse collection of instruments is the reason why the Cassini-Huygens spacecraft is so large.

The Cassini and Huygens missions, featuring the intertwined work of NASA, ESA and ASI, have become models for future international space science cooperation.

The Saturn System

Saturn is easily visible to the naked eye, and was known to ancient peoples around the world. It was not until the invention of the telescope, however, that Saturn's characteristic rings began to come into focus.

Historical Observations

The Italian astronomer Galileo was the first to look at Saturn through a telescope in 1609-10. Viewed through Galileo's crude instrument, Saturn was a puzzling sight. Unable to make out the rings, Galileo thought he saw two sizable companions close to the planet. Having recently discovered the major moons of Jupiter, he supposed that Saturn could have large moons, too. "... [T]o my very great amazement, Saturn was seen to me to be not a single star, but three together, which almost touch each other," he wrote at the time.

Galileo was even more astonished when, two years later, he again looked at Saturn through his telescope only to find that the companion bodies had apparently disappeared. "I do not know what to say in a case so surprising, so unlooked for and so novel," he wrote in 1612. The rings were simply "invisible" because he was now viewing them edge-on. Two years later, they again reappeared, larger than ever. He concluded that what he saw were some sort of "arms" that grew and disappeared for unknown reasons. He died never knowing that he had been the first to observe Saturn's rings.

Nearly half a century later, the Dutch scientist Christiaan Huygens solved the puzzle that vexed Galileo. Thanks to better optics, Huygens was able to pronounce in 1659 that the companions or arms decorating Saturn were not appendages, but rather the planet "is surrounded by a thin, flat ring, which nowhere touches the body." His theory was received with some opposition, but was confirmed by the observations of Robert Hooke and Italian-French astronomer Jean Dominique Cassini.

While observing Saturn, Huygens also discovered the moon Titan. A few years later, Cassini added several other key Saturn discoveries. Using new telescopes, Cassini discovered Saturn's four other major moons — Iapetus, Rhea, Tethys and Dione.

In 1675, Cassini discovered that Saturn's rings are split largely into two parts by a narrow gap — known since as the "Cassini Division." In the 19th century, J. E. Keeler, pursuing theoretical studies developed by James Clerk Maxwell, showed that the ring system was not a uniform sheet but made up of small particles that orbited Saturn.

The first detection of Saturn's magnetic field came with the flyby of Saturn by NASA's Pioneer 11 spacecraft in 1979. Then, in 1980 and 1981, the NASA Voyager 1 and Voyager 2 spacecraft flew through Saturn's system to reveal storms and subtle latitudinal banding in the planet's atmosphere, several more small moons and a breathtaking collection of thousands of ringlets. The Voyagers found ring particles ranging in size from nearly invisible dust to icebergs

the size of a house. The spacing and width of the ringlets were discovered to be orchestrated at least in part by gravitational tugs from a retinue of orbiting moons and moonlets, some near ring edges but most far beyond the outermost main rings. Voyager instruments confirmed a finding from ground-based instruments that the rings contain water ice, which may cover rocky particles.

Saturn has been a frequent target of the Hubble Space Telescope, which has produced stunning views of long-lived hurricane-like storms in Saturn's atmosphere. The world's major telescopes, including Hubble, were recently trained on Saturn to observe the phenomenon known to astronomers as a Saturn ring plane crossing. The rings were seen edge-on from Earth's perspective on May 22 and August 10, 1995, and on February 11, 1996. Ring plane crossings provide astronomers with unique views of Saturn's system.

These observations showed that the ring plane was not absolutely flat; the tilt of the F-ring distorts the appearance of the rings, causing one side to appear brighter than the other during ring plane crossings. Searches for new moons turned up several suspects, but most are now believed to be bright "knots" in the F-ring. Of particular interest were these ring arcs, natural "satellites" in the F-ring that appeared cloud-like and spread over a small area, instead of sharp pinpoints. The origin of these clumps of material in the F-ring is not well understood.

The faint, outermost E-ring is also easier to detect when viewed edge-on due to the greater amount of material in the line-of-sight. Thus, observations made over the course of the ring plane crossing provided new information on the thickness of the rings. New information gathered on the location and density of material in the rings was used by designers to plan the most advantageous and safest course for Cassini's flight through the E-ring upon arrival at Saturn in 2004.

The Hubble Space Telescope is an important tool for studying Saturn, its rings, moons and magnetosphere in support of the Cassini mission. Hubble observations of Saturn's atmosphere were made after storms were discovered by ground-based observers. First in 1990 and again in 1994, apparent upwellings of ammonia clouds appeared and then were spread around the planet by prevailing winds.

Hubble observations of Titan indicate that color differences in Titan's hemispheres seen during the Voyager flybys in 1980 and 1981 have since reversed themselves. Some Hubble observations have studied chemical processes in Titan's atmosphere. Images made in the infrared have looked through Titan's clouds and allowed some mapping of its surface. Hubble has also contributed new information about the processes in Saturn's magnetosphere through ultraviolet measurements of Saturn's auroras.

Scientists using Hubble expect to study the planet and the ring system as it opens up to our view during the course of Cassini's cruise to the planet. Hubble investigations will place Cassini results in the context of the decades-long studies of the planet and help direct Cassini instruments for studies of Saturn's system during its orbital tour.

Saturn's Place in the Solar System

Studies of star formation indicate that our solar system formed within a giant collection of gases and dust, drawn together by gravitational attraction and condensed over many millions of years into many stars. The giant gas cloud condensed into rotating pools of higher density in a process called gravitational collapse. These rotating pools of material condensed more rapidly until their temperatures and densities were great enough to form stars. Surrounding each new star, the leftover material flattened into a disc rotating approximately in the plane of the star's equator. This material can eventually form planets — and this is apparently what occurred in our solar system.

The composition of the planets is largely controlled by their temperatures, which in turn is determined by their distances from the Sun. Compounds with high melting points were the first to condense, followed by silicates. These formed the rocky cores of all the planets.

While hydrogen is the predominant element in the universe and in our solar system, other gases are present, including water, carbon dioxide and methane. As ices, these predominate in the cooler outer solar system. Gases also collected as envelopes around the planets and moons. (Where conditions are right, large quantities of water in its liquid state can form, as exhibited by Earth's oceans, Mars' flood plains and a possible ocean beneath the surface of Europa, a moon of Jupiter.)

The large outer planets contain much of the primordial cloud's gases not trapped by the Sun. Hydrogen is the most abundant material in the Sun and in all the large gaseous planets — Jupiter, Saturn, Uranus and Neptune. Each of these giant planets has many moons. These moons form systems of natural satellites, creating the equivalent of miniature solar systems around the gas giants formed by processes similar to those responsible for the system around the Sun.

Saturn is similar to Jupiter in size, shape, rotational characteristics and moons, but Saturn is less than one-third the mass of Jupiter and is almost twice as far from the Sun. Saturn radiates more heat than it receives from the Sun. This is true of Jupiter as well, but Jupiter's size and cooling rate suggest that it is still warm from the primordial heat generated from condensation during its formation. Slightly smaller Saturn, however, has had time to cool — so some mechanism, such as helium migrating to the planet's core, is needed to explain its continuing radiation of heat.

Voyager measurements found that the ratio of helium to molecular hydrogen in Saturn is 0.06, compared to Jupiter's value of 0.13 (which is closer to the solar abundance and that of the primordial solar nebula). Helium depletion in Saturn's upper atmosphere is believed to result from helium raining down to the lower altitudes; this supports the concept of helium migration as the heat source in Saturn. Cassini's measurements of Saturn's energy, radiation and helium abundance will help explain the residual warmth.

Saturn's visible features are dominated by atmospheric clouds. They are not as distinct

as Jupiter's clouds, primarily because of a haze layer covering the planet that is a result of cooler temperatures due to the weaker incoming sunlight. This reduced solar radiation, and correspondingly greater influence from escaping internal heat, lead to greater wind velocities on Saturn. Both Saturn's and Jupiter's weather are thus driven by heat from below.

The Planet Saturn

Saturn is the sixth planet from the Sun. Compared with Earth, Saturn is 9.5 times farther away from the Sun. From Saturn, the Sun is about 1/10th the size of the Sun we see from Earth. Sunlight spreads as it travels through space; an area on Earth receives 90 times more sunlight than an equivalent area on Saturn. Because of this fact, the same light-driven chemical processes in Saturn's atmosphere take 90 times longer than they would at Earth. The farther away from the Sun, the slower a planet travels in its orbit, and the longer it takes to complete its orbit about the Sun. Saturn's year is equal to 29.46 Earth years.

Saturn's orbit is not circular but slightly elliptical in shape; as a result, Saturn's distance from the Sun changes as it orbits the Sun. This elliptical orbit causes a small change in the amount of sunlight that reaches the surface of this gaseous planet at different times in the Saturn year, and may affect the planet's upper atmospheric composition over that period.

Saturn's period of rotation around its axis depends on how it is measured. The cloud tops show a rotation period of 10 hours, 15 minutes at the equator, but the period is 23 minutes longer at higher latitudes. A radio signal that has been associated with Saturn's magnetic field shows a period of 10 hours, 39.4 minutes.

This high rotation rate creates a strong centrifugal force that causes an equatorial bulge and a flattening of Saturn's poles. As a result, Saturn's cloud tops at the equator are about 37,490 miles (60,330 kilometers) from the center, while the cloud tops at the poles are only about 33,550 miles (54,000 kilometers) from the center. Saturn's volume is 764 times the volume of Earth.

Saturn has the lowest density of all the planets because of its vast, distended, hydrogen-rich outer layer. Like the other giant planets, Saturn contains a liquid core of heavy elements including iron and rock of about the same volume as Earth, but having three or more times the mass of Earth. This increased density is due to compression resulting from the pressure of the liquid and atmospheric layers above the core, and is caused by gravitational compression of the planet.

The core of molten rocky material is believed to be covered with a thick layer of metallic liquid hydrogen and, beyond that, a layer of molecular liquid hydrogen. The great overall mass of Saturn produces a very strong gravitational field, and at levels just above the core the hydrogen is compressed to a state that is liquid metallic, which conducts electricity. (On Earth, liquid hydrogen is usually made by cooling the hydrogen gas to very cold temperatures, but on Saturn, liquid hydrogen is very hot and is formed under several million times the atmospheric pressure found at Earth's surface.) This conductive liquid metallic hydrogen layer, which is also

spinning with the rest of the planet, is believed to be the source of Saturn's magnetic field. Turbulence or convective motion in this layer of Saturn's interior may create Saturn's magnetic field .

One unusual characteristic of Saturn's magnetic field is that its axis is the same as that of the planet's rotation. This is different from that of five other notable magnetic fields: those of Mercury, Earth, Jupiter, Uranus and Neptune. Current theory suggests that when the axes of rotation and magnetic field are aligned, the magnetic field cannot be maintained. Scientists do not understand the alignment of Saturn's strong magnetic field with its rotation axis, which does not fit with theories of how planets' magnetic fields are generated.

On Earth, there is a definite separation between the land, the oceans and the atmosphere. Saturn, on the other hand, has only layers of hydrogen that transform gradually from a liquid state deep inside into a gaseous state in the atmosphere, without a well-defined boundary. This is an unusual condition that results from the very high pressures and temperatures found on Saturn. Because the pressure of the atmosphere is so great, the atmosphere is compressed so much where the separation would be expected to occur that it actually has a density equal to that of the liquid. This condition is referred to as "supercritical." It can happen to any liquid and gas if compressed to a point above critical pressure. Saturn thus lacks a distinct surface; when making measurements, scientists use as a reference point the altitude where the pressure is 1 bar (or one Earth atmosphere). This pressure level is near Saturn's cloud tops.

The major component of Saturn's atmosphere is hydrogen gas. If the planet were composed solely of hydrogen, there would not be much of interest to study. However, the composition of Saturn's atmosphere includes 6 percent helium gas by volume; in addition, 1/10,000th of 1 percent is composed of other trace elements. Using spectroscopic analysis, scientists find that these atmospheric elements can interact to form ammonia, phosphine, methane, ethane, acetylene, methylacetylene and propane. Even a small amount is enough to freeze or liquefy and make clouds of ice or rain possessing a variety of colors and forms.

With the first pictures of Saturn taken by the Voyager spacecraft in 1980, the clouds and the winds were seen to be almost as complex as those that Voyager found on Jupiter just the year before. Scientists have made an effort to label the belts and zones seen in Saturn's cloud patterns. The banding results from convective flows in the atmosphere driven by temperature — very much the same process that occurs in Earth's atmosphere, but on a grander scale and with a different heat source.

Saturn has different rotation rates in its atmosphere at different latitudes. Differences of more than 900 miles per hour (1,500 kilometers per hour) were seen between the equator and nearer the poles, with higher speeds at the equator. This is five times greater than the wind velocities found on Jupiter.

Saturn's cloud tops reveal the effects of temperature, winds and weather many kilometers below. Hot gases rise. As they rise, they cool and can form clouds. As these gases cool, they begin to sink: this convective motion is the source of the billowy clouds seen in the cloud

layer. Cyclonic storms observed in the cloud tops of Saturn are much like the smaller versions we see in weather satellite images of Earth's atmosphere.

Temperature variations in Saturn's atmosphere are the driving force for the winds and thus cloud motion. The lower atmosphere is hotter than the upper atmosphere, causing gases to move vertically, and the equator is warmer than the poles because it receives more direct sunlight. Temperature variations, combined with the planet's rapid rotation rate, are responsible for the fast horizontal motion of winds in the atmosphere.

Titan

Titan presents an environment which appears to be unique in the solar system, with a thick organic hazy atmosphere containing organic (or carbon-based) compounds, an organic ocean or lakes and a rich soil filled with frozen molecules similar to what scientists believe led to the origin of life on Earth. In the three centuries since the discovery of Titan we have come to see it as a world strangely similar to our own, yet located almost 900 million miles (1.5 billion kilometers) from the Sun. With a thick, nitrogen-rich atmosphere, possible seas and a tar-like permafrost, Titan is thought to harbor organic compounds that may be important in the chain of chemistry that led to life on Earth.

Titan has been described as having an environment similar to that of Earth before biological activity forever altered the composition of Earth's atmosphere. The major difference on Titan, however, is the absence of liquid water and Titan's very low temperature. Thus there is no opportunity for aqueous chemistry at Earth-like temperatures — considered crucial for the origin of life as we know it. Scientists say the surface temperatures on Titan are thought to be cold enough to preclude any biological activity whatsoever at Titan.

As on Earth, the dominant atmospheric constituent in Titan's atmosphere is nitrogen. Methane represents about 6 percent of the atmospheric composition. Titan's surface pressure is 1.6 bars — more than 50 percent greater than that on Earth, despite Titan's smaller size. The surface temperature was found by Voyager to be -290 F (-179 C), indicating that there is little greenhouse warming.

The opacity of Titan's atmosphere is caused by naturally produced photochemical smog. Voyager's infrared spectrometer detected many minor constituents produced primarily by photochemistry of methane, which produces hydrocarbons such as ethane, acetylene and propane. Methane also interacts with nitrogen atoms, forming "nitriles" such as hydrogen cyanide. With Titan's smoggy sky and distance from the Sun, a person standing on Titan's surface in the daytime would experience a level of daylight equivalent to about 1/1,000th the daylight at Earth's surface.

What is the source of molecular nitrogen , the primary constituent of Titan's atmosphere as we see it today? Was the molecular nitrogen accumulated as Titan formed, or was is it the byproduct of ammonia that formed with Titan? Did it come from comets? This important question can be investigated by looking for argon in Titan's atmosphere. Both argon and nitrogen

condense at similar temperatures. If molecular nitrogen from the solar nebula — the cloud of gas that formed the Sun — was the source of nitrogen on Titan, then the ratio of argon to nitrogen in the solar nebula should be preserved on Titan. Such a finding would mean that we have truly found a sample of the "original" planetary atmosphere.

Some of the hydrocarbons found at Titan spend time as the aerosol haze in the atmosphere that obscures the surface. Many small molecules of compounds such as hydrogen cyanide and acetylene combine to form larger chains in a process called polymerization, resulting in additional aerosols. Eventually they drift to Titan's surface. Theoretically the aerosols should accumulate on the surface and, over the life of the solar system, produce a global ocean of ethane, acetylene, propane and other constituents with an average depth of up to about two-thirds of a mile (1 kilometer). A large amount of liquid methane mixed with ethane could theoretically provide an ongoing source of methane in the atmosphere, similar to the way oceans on Earth supply water to the atmosphere. Radar and near-infrared data from ground-based studies show, however, that there is no global liquid ocean on Titan, although there could be lakes and seas. Titan appears to have winds.

The surface of Titan was not visible to Voyager at the wavelengths available to Voyager's cameras. What knowledge exists about the appearance of the surface of Titan comes from Earth-based radar measurements and more recent images acquired with the Hubble Space Telescope at wavelengths longer than those of Voyager's cameras. Hubble images from 1994 and later reveal brightness variations suggesting that Titan has a large continent-sized region on its surface that is distinctly brighter than the rest of the surface at both visible and near-infrared wavelengths. Preliminary studies suggest that a simple plateau or elevation change of Titan's surface cannot explain the image features; the brightness differences must be partly due to a different composition and/or roughness of material. Like other moons in the outer solar system, Titan is expected to have a predominantly water ice crust. Water at the temperatures found in the outer solar system is as solid and strong as rock. There are weak spectral features that suggest ice on Titan's surface, but some dark substance is also present. Scientists conclude that something on the surface is masking the water ice.

Titan's size alone suggests that it may have a surface similar to Jupiter's moon Ganymede — somewhat modified by ice tectonics, but substantially cratered and old. If Titan's tectonic activity is no more extensive than that of Ganymede, circular crater basins may provide storage for lakes of liquid hydrocarbons. Impacting meteorites would create a layer of broken, porous surface materials, called regolith, which may extend to a depth of about 1 to 2 miles (1 to 3 kilometers). This regolith could provide subsurface storage for liquid hydrocarbons as well. In contrast to Ganymede, Titan may have incorporated as much as 15 percent ammonia as it formed in the colder region of Saturn's orbit. As Titan's water-ice surface froze, ammonia-water liquid would have been forced below the surface. This liquid will be buoyant relative to the surface water-ice crust, however; ammonia-water magma thus may have forced its way along cracks to the surface, forming exotic surface features. Density measurements suggest that Titan is made up of roughly half rocky silicate material and half water ice. Methane and ammonia could have been mixed with the water ice during Titan's formation. The formation of Titan by accretion was at temperatures warm enough for Titan to differentiate; rocky material sank to

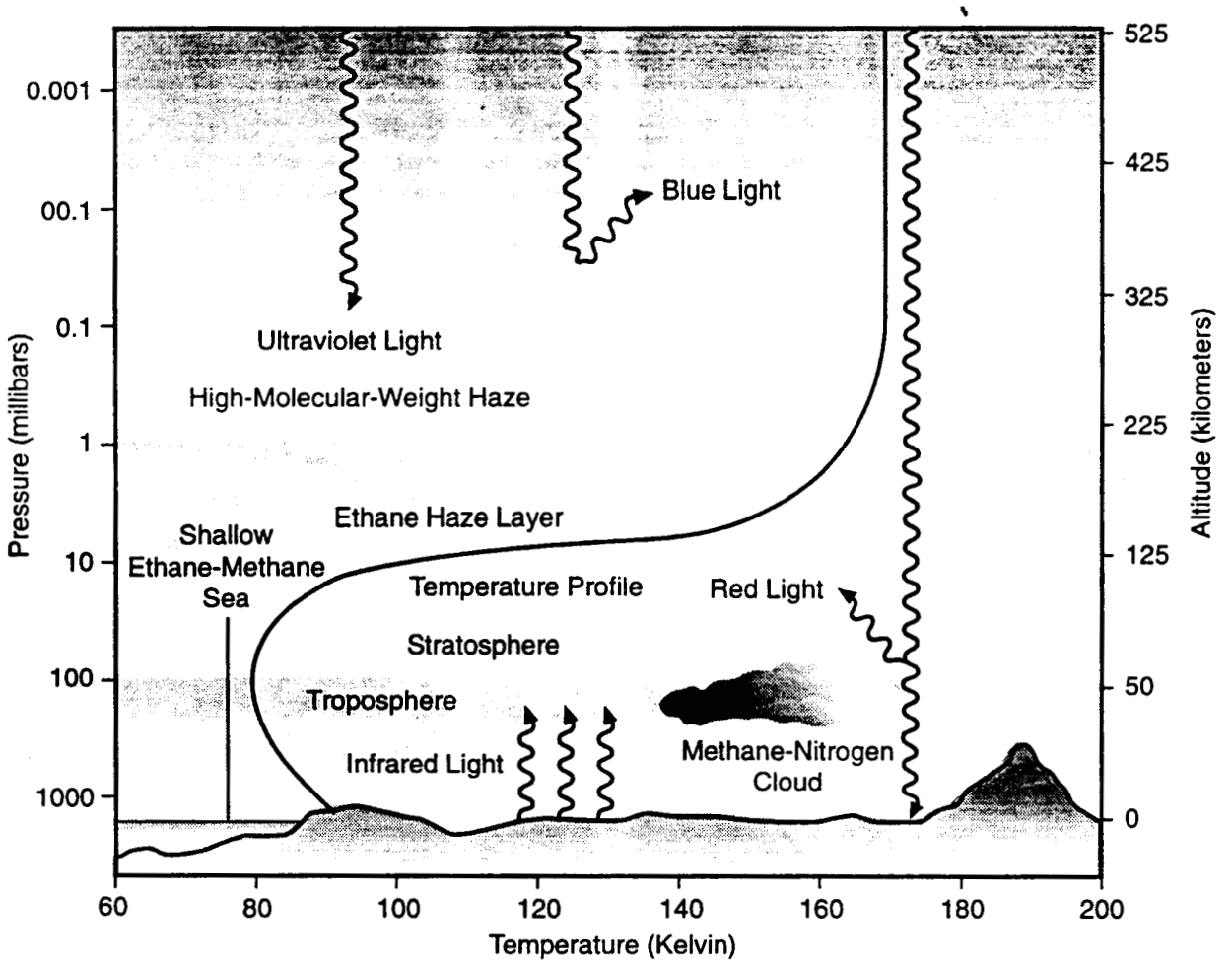

Model of Titan's atmosphere

form a dense core, covered by a mantle of water, ammonia and methane ices.

The mixture of ammonia with water could ensure that Titan's interior is still partially unsolidified, as the ammonia would effectively act like antifreeze. Radioactive decay in the rocky material in the core could heat the core and mantle, making it possible that a liquid layer could exist today in Titan's mantle.

Methane could be trapped in Titan's water ice crust, which could provide a possible long term source for the methane in Titan's atmosphere if it were freed by ongoing volcanic processes. Due to Titan's thick natural smog, Voyager was prevented from viewing the surface; the images showed a featureless orange face. Spectroscopic observations by Voyager's infrared spectrometer revealed traces of ethane, propane, acetylene and other organic molecules in addition to methane. These hydrocarbons are produced by the combination of solar ultraviolet light and electrons from Saturn's rapidly rotating magnetosphere striking Titan's atmosphere. Hydrocarbons produced in the atmosphere eventually condense out and rain down on the surface, thus there may exist lakes of ethane and methane, perhaps enclosed in the round bowls of impact craters. Titan's hidden surface may have exotic features such as mountains sculpted by

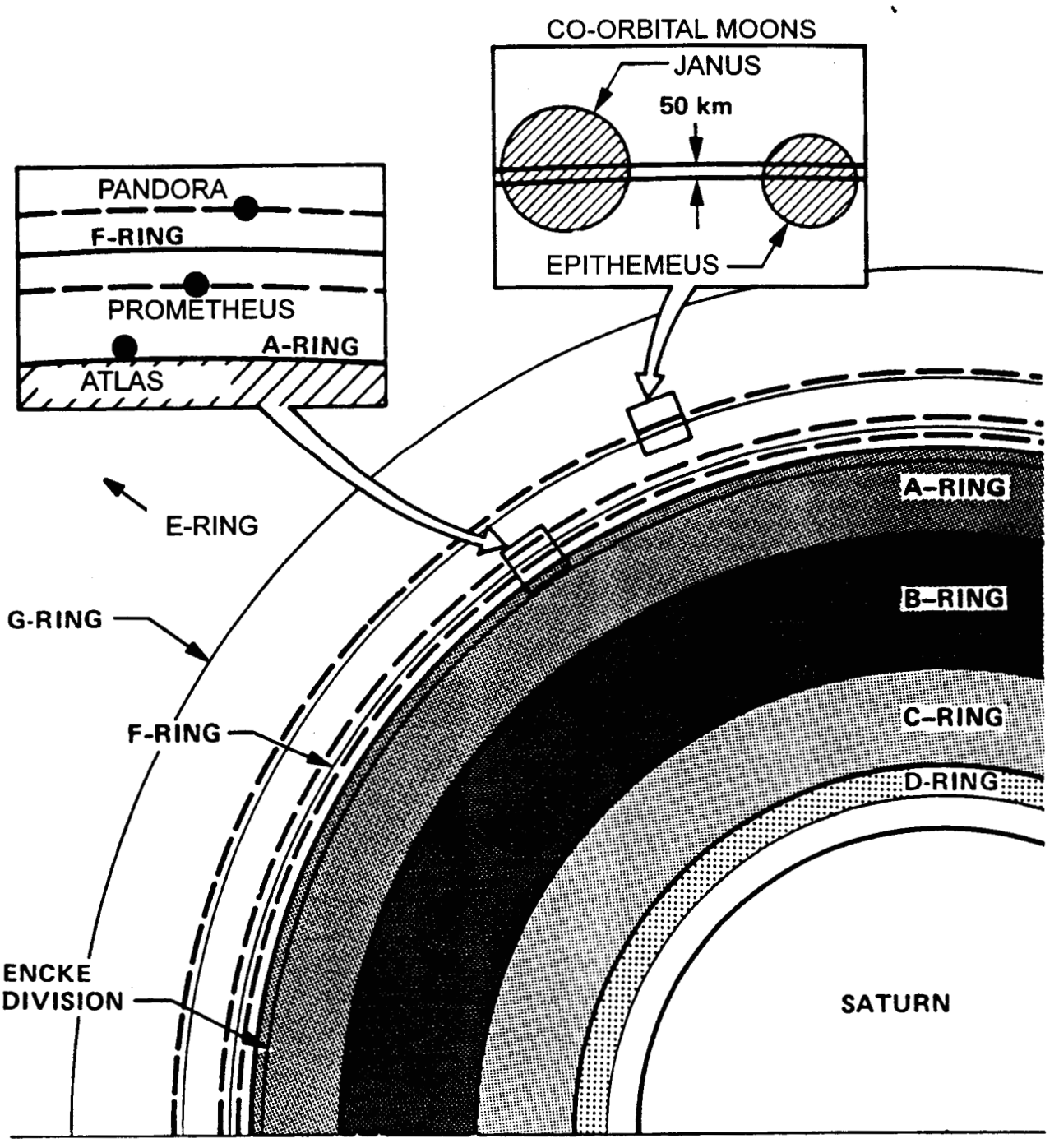

Saturn's rings

hydrocarbon rain, and perhaps rivers, lakes and "waterfalls" of exotic liquids. Water and ammonia magma from Titan's interior may occasionally erupt, spreading across the surface.

Titan's orbit takes it both inside and outside the magnetosphere of Saturn. When Titan is outside the magnetosphere and exposed to the solar wind, its interaction may be similar to that of other bodies in the solar system such as Mars, Venus or comets (these bodies have substantial interaction with the solar wind, and, like Titan, have atmospheres but no strong internal

magnetic fields).

The interaction of Titan with the magnetosphere provides a way for both the magnetospheric plasma to enter Titan's atmosphere and for atmospheric particles to escape Titan. Voyager results suggested that this interaction produces a torus of neutral particles encircling Saturn, making Titan a potentially important source of plasma to Saturn's magnetosphere. The characteristics of this torus are yet to be explored, and will be studied by the Cassini orbiter. The interaction of ice particles and dust from Saturn's rings will play a special role as the dust moves out towards Titan's torus and becomes charged by collisions. When the dust is charged it behaves partially like a neutral particle orbiting Titan according to Kepler's laws (gravity driven), and partially like a charged particle moving with Saturn's magnetosphere. The interaction of dust with Saturn's magnetosphere will provide scientists with a detailed look at how dust and plasma interact.

Electrical storms and lightning may exist in Titan's skies. Cassini will search for visible lightning and listen for "whistler" emissions that can be detected when lightning discharges a broad band of electromagnetic emission, part of which can propagate along Saturn's magnetic field lines. These emissions have a decreasing tone with time (because the high frequencies arrive before the low frequencies). Lightning whistlers have been detected in both Earth's and Jupiter's magnetosphere. They can be detected by radio and plasma-wave instruments from large distances and also can be used to estimate the frequency of lightning.

Titan may have its own internally generated magnetic field. Recent results from the Galileo spacecraft at Jupiter indicate the possibility of an internally generated magnetic field associated with the moon Ganymede. For Titan there are two possibilities: A magnetic field could be induced from the interaction of Titan's substantial atmosphere with the flow of Saturn's magnetosphere (like Venus's interaction with the solar wind); or a magnetic field could be generated internally from dynamo action in a metallic molten core (like Earth's). (Under the dynamo theory, a magnetic field is created by the circling motion of electrically charged material in the core.) In addition to being important to understanding the Titan interaction with Saturn's magnetosphere, a Titan magnetic field, if generated internally, would help scientists define the natural satellite's interior structure.

The Rings

From a distance, the rings of Saturn look like majestically symmetrical hoops surrounding the planet. Up close, however, from the views provided by the Voyager spacecraft, the rings turn out to be a still splendid but somewhat unruly population of ice and rock particles jostling against each other or being pushed and pulled into uneven orbits by bigger particles and by Saturn's many moons.

The mass of all the ring particles measured together would comprise a moon about the size of Mimas, one of Saturn's medium-small moons. The rings may, in fact, be at least partly composed of the remnants of such a moon or moons, torn up by gravitational forces.

Their precise origin is a mystery. It is not known if rings formed around Saturn out of the initial solar system nebula, or after one or more moons were torn apart by Saturn's gravity. If the rings were the result of the numerous comets captured and destroyed by Saturn's gravity, why are Saturn's bright rings so different in nature from the dark rings of neighboring planets? Over the lifetime of the rings, they must have been bombarded continually by comets and meteors — and therefore they should have accumulated a great amount of carbonaceous and silicate debris — yet water ice is the only material positively identified in spectra of the rings.

The effects of torque and gravitational drag — along with the loss of momentum through collisions — should have produced a system only one-tenth to one-hundredth the age of the solar system itself. If this hypothesis is correct, then we cannot now be observing a ring system around Saturn that formed when the solar system formed.

In fact, Saturn's rings — as well as the rings of all the other large planets — may have formed and dissipated many times since the beginning of the solar system. An extraordinarily complex structure is seen across the entire span of Saturn's ring system. The broad B-ring, for instance, often contains numerous "spokes" — radial, rotating features that may be caused by a combination of magnetic and electrostatic forces. The individual rings themselves defy definition; the count in high-resolution images suggests anywhere from 500 to 1,000 separate rings. Named in order of discovery, the labels that scientists have assigned to the major rings do not indicate their relative positions. From the planet outward, they are known as the D-, C-, B-, A-, F-, G- and E-rings.

The possibility of numerous, small natural satellites within Saturn's ring system was a puzzle the Voyager mission had hoped to solve. Voyager's best-resolution studies of the ring system were aimed at revealing any bodies larger than about 6 miles (about 10 kilometers) in diameter; but only three were found and none were located within the main ring complex.

The Voyager high-resolution studies did, however, detect signs of small moonlets not actually resolved in the images. When a small, dense body passes near a section of low-density ring material, its gravitational pull distorts the ring and creates what are known as "edge waves."

Cassini will be able to perform a number of the experiments that Voyager used to detect other gravitational effects on Saturn's ring material. One experiment involves "watching" as a beam of light (or, in one case, radio waves) passes through the ring, then observing the effects of the ring material on the beam. As the beam passes through the ring material, it may be attenuated or even extinguished. This "occultation" experiment provides an extremely high-resolution study of a single path across the rings — with resolutions up to about 330 feet (about 100 meters), Cassini will obtain far more detailed information on ring structures than the Voyager instruments.

Voyager's instruments did detect many minute ring structures and found that the F-ring was far more complex than images had suggested. The data set, furthermore, showed that the B-ring was quite opaque in regions, and the Cassini "division" was not at all empty. It also pro-

vided a direct measurement of the maximum thickness of the ring system in several locations, finding it to be much less than about 330 feet (100 meters) thick there.

Many narrow ringlets were found with slightly eccentric, non-circular shapes and orbits. These eccentric ringlets generally lie in gaps in the mass of nearly circular rings that make up the majority of Saturn's ring system. Voyager also found very few truly empty "gaps" in the ring system. Moonlets inside the rings do appear to clear lanes within the ring plane, giving the rings their grooved appearance.

Voyager cameras found shepherd moons that tend to contain ring particles that would otherwise spread. Also seen were density waves that move though portions of the ring plane like a crowd starting a "wave" in a stadium. This phenomenon is due to the effects of one or more moons or moonlets gravitationally tugging on ring particles.

Gravitational interactions with moons seem to create most of the structure visible in the rings, but some structural detail exists even where there is no gravitational interaction with a moon. Some poorly understood fluid physics may be responsible for some unexplained structure in the rings. Other ring features may be explained by moonlets or large particles in the rings that have gone undetected.

Voyager images showed dark, radial structures on the rings. These so-called "spokes" were seen as they formed and rotated about the planet. Spokes seemed to appear rapidly — as a section of ring rotated out of the darkness near the dawn terminator — and then dissipate gradually, rotating around toward the dusk terminator of the ring. A spoke's formation time seemed to be very short; in some imaging studies they were seen to grow more than about 3,700 miles (6,000 kilometers) in distance in just 5 minutes.

The spokes in Saturn's rings have an unexplained link with the planet's magnetic field,

and are likely just one visible manifestation of many interactions the rings have with Saturn's electromagnetic fields.

Ground-based infrared studies of the spectra of the A- and B-rings show that they are composed largely, perhaps even exclusively, of water ice. The spectral characteristics of the rings are also very similar to those of several of Saturn's inner moons.

Studies of the main rings show that the ring system is not completely uniform in its makeup, and that some sorting of materials within the A- and B-rings exists. Why such a non-uniform composition exists is unknown. The E-ring is somewhat bluish in color — and thus different in makeup from the main rings. It is believed that the moon Enceladus is the source of E-ring material.

Since ring particles larger than about 1 millimeter represent a considerable hazard to the Cassini spacecraft, the mission plan will include efforts to avoid dense particle areas of Saturn's ring plane. The spacecraft will be oriented to provide maximum protection for itself and its sen-

sitive instrumentation packages. Even with such protective measures, passage through the ring plane out beyond the main rings will allow Cassini's instruments to make important measurements of the particles making up the less dense regions of the Cassini ring plane. These studies could provide considerable insight into the composition and environment of the ring system and Saturn's icy natural satellites.

The Icy Moons

The moons of Saturn are diverse — ranging from the planet-like Titan to tiny, irregular objects only tens of miles (or kilometers) in diameter. These bodies are all (except perhaps Phoebe) believed to hold not only water ice, but also other components such as methane, ammonia and carbon dioxide. Saturn has at least 18 moons; there are likely other small, undiscovered natural satellites in the planet's system.

Many of the smallest moons were discovered during the Voyager spacecraft flybys. The 18th moon, Pan, was found nearly 10 years after the flybys during close analysis of Voyager images; it is embedded in the Encke Gap within Saturn's A-ring. Saturn's ring plane crossings — when the obscuring light from Saturn's bright rings dims as the rings move to an edge-on orientation from Earth's perspective — represent the ideal time for discovering new moons. Images obtained by the Hubble Space Telescope during the ring plane crossings in 1995 and 1996, however, did not reveal any unambiguous discoveries of new moons.

Before the advent of spacecraft exploration, scientists expected the moons of the outer planets to be geologically dead. They assumed that heat sources were not sufficient to have melted the moons' mantles enough to provide a source of liquid, or even semi-liquid, ice or ice silicate slurries. The Voyager and Galileo spacecraft have radically altered this view by revealing a wide range of geological processes on the moons of the outer planets. For example, Saturn's moon Enceladus may be currently active. Several of Saturn's medium-sized moons are large enough to have undergone internal melting with subsequent differentiation and resurfacing.

Many moons in the outer solar system show the effects of tidal interactions with their parent planets, and sometimes with other moons. This gravitational pushing and pulling can heat a moon's interior, causing tectonic, volcanic or geyser-like phenomena. Another factor is the presence of non-ice components, such as ammonia hydrate or methanol, which lower the melting point of near-surface materials. Partial melts of water ice and various other components — each with their own melting point and viscosity — provide material for a wide range of geological activity.

Because the surfaces of so many moons of the outer planets exhibit evidence of geological activity, planetary scientists have begun to think in terms of unified geological processes occurring on the planets and their moons. For example, partial melts of water ice with other materials could produce flows of liquid or partially molten slurries similar to lava flows on Earth that result from the partial melting of silicate rock mixtures. The ridged and grooved ter-

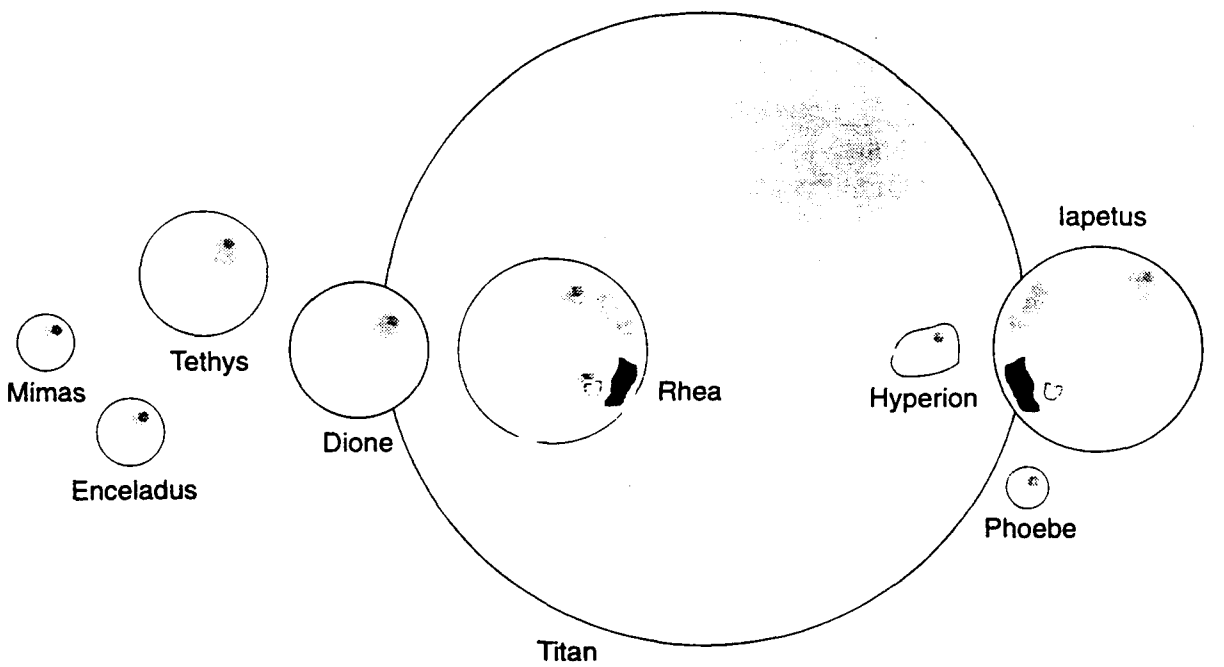

Saturn's major moons

rains on moons such as Saturn's Enceladus and Tethys may have resulted from tectonic activities found to occur throughout the solar system. The explosive volcanic eruptions possibly occurring on Enceladus may be similar to those occurring on Earth.

Several of Saturn's moons underwent periods of melting and active geology within a billion years of their formation and then became quiescent. For nearly a billion years after their formation, the moons all underwent intense bombardment and cratering. The bombardment tapered off to a slower rate, but still continues. By counting the number of craters on a moon's surface, and making certain assumptions about the amount and frequency of impacting material, geologists are able to estimate when a specific portion of a moon's surface was formed.

Meteorites bombarding icy bodies change the surfaces by excavating and exposing fresh material. Impacts can also cause some surface or subsurface materials to turn to vapor, and the subsequent escape of those vaporized materials can create a slag deposit enriched in opaque, dark materials. Both the moons of Jupiter and the medium-sized moons of Saturn tend to be brighter on the hemispheres leading in the direction of orbital motion (each moon's so-called "leading" side, as opposed to its "trailing" side); this effect is thought to be due to the roughing-up and coating that the leading side receives from meteor bombardment.

Saturn's six largest moons after Titan are smaller than Titan and Jupiter's giant Galilean moons, but they are still sizable and represent a unique class of icy satellite. Tethys, Rhea, Iapetus, Mimas and Enceladus are thought to be largely water ice, possibly mixed with ammonia or other volatiles. They have smaller amounts of rocky silicates than the Galilean moons.

❑ Saturn's innermost, medium-sized moon, **Mimas**, is covered with craters, including one named Herschel that covers a third of the moon's diameter. There is a suggestion of grooves in its surface that may be features caused by the impact that created Herschel. The craters on Mimas tend to be high-rimmed, bowl-shaped pits. Crater count of Mimas suggest that it has undergone several episodes of resurfacing.

❑ The next moon outward from Saturn is **Enceladus**, an object that was known from telescope measurements to reflect nearly 100 percent of the visible light it receives. This leads scientists to believe Enceladus' surface is probably pure water ice. Voyager 2 images reveal a surface that had been subjected in the recent geological past to extensive resurfacing. Grooved formations similar to those on the Galilean moon Ganymede are prominent.

The lack of impact craters on part of Enceladus leads scientists to conclude the age of its surface is less than a billion years. Some form of ice volcanism may be currently occurring on Enceladus. One possible source of heating is tidal interactions, perhaps with the moon Dione.

Enceladus is possibly responsible for the formation of Saturn's E-ring. This ring is a tenuous collection of icy particles that extends from inside the orbit of Enceladus to beyond the orbit of Dione, but is much much thicker than Saturn's other rings. The maximum thickness position of the ring coincides with the orbital position of Enceladus. If some form of volcanism is occurring on the surface, it could provide a source of particles for the ring.

❑ **Tethys** is covered with impact craters, including Odysseus, an enormous impact structure more than 250 miles (400 kilometers) in diameter, or more than one-third of the moon's diameter of 658 miles (1,060 kilometers). The craters tend to be flatter than those on Mimas or Earth's Moon, probably because they have been smoothed out over the eons under Tethys' stronger gravitational field. Evidence for episodes of resurfacing is seen in regions that have fewer craters and higher reflectivity. In addition, there is a huge trench formation, the Ithaca Chasma, which may be a degraded form of the grooves found on Enceladus.

❑ **Dione** is about the same size as Tethys but more dense, and shows a wide variety of surface features. Next to Enceladus among Saturn's moons, it has the most extensive evidence for internal activity. It has enough rocky material in its makeup to produce heat from natural radioactivity, which could be the cause of its internal activity. Most of the surface is heavily cratered, but gradations in crater density indicate that several periods of resurfacing occurred during the first billion years of Dione's existence. The leading side of the moon is about 25 percent brighter than the other, due possibly to more intensive bombardment by micrometeorites on the darker hemisphere. Wispy streaks, which are about 50 percent brighter than the surrounding areas, are believed to be the result of internal activity and subsequent flows of erupting material.

❑ **Rhea** appears to be superficially very similar to Dione. Bright, wispy streaks cover one hemisphere. No resurfacing events seem to have occurred in its early history, however. Some regions lack large craters, while other regions have a preponderance of such impacts. The

larger craters may be due to a population of larger debris that was more prevalent during an earlier era of collisions.

❑ When the astronomer Cassini discovered **Iapetus** in 1672, he noticed almost immediately that at one point in its orbit around Saturn it was very bright, but on the opposite side of the orbit, the moon nearly disappeared. He correctly deduced that the trailing hemisphere is composed of highly reflective material, while the leading hemisphere is strikingly darker. (This sets Iapetus apart from Saturn's other moons and the moons of Jupiter, which tend to be brighter on their leading hemispheres.) Voyager images show that the bright side, which reflects nearly 50 percent of the light it receives, is fairly typical of a heavily cratered icy satellite. The other side, which is the face that Iapetus puts forth as it moves forward in its orbit, is coated with a much darker, redder material that has a reflectivity of only about 3 to 4 percent.

Scientists still do not agree on whether the dark material originated from an outside source or was created from Iapetus' own interior. One scenario for the outside deposit of material would involve dark particles being ejected from the little moon Phoebe and drifting inward to coat Iapetus. The major problem with this model is that the dark material on Iapetus is redder than Phoebe, although the material could have undergone chemical changes after its expulsion from Phoebe that made it redder. One observation lending credence to an internal origin is the concentration of material on crater floors, which implies that something is filling in the craters. In one model proposed by scientists, methane could erupt from the interior and then become darkened by ultraviolet radiation.

Iapetus is odd in other respects. It is the only large Saturn moon in a highly inclined orbit, one that takes it far above and below the plane in which the rings and most of the moons orbit. It is less dense than objects of similar brightness, which implies that it has a higher fraction of ice or possibly methane or ammonia in its interior.

Small Moons

The Saturn system has a number of unique, small moons. Two types of objects have been found only in Saturn's system: the co-orbital moons and the Lagrangians. A third type of object, shepherding moons, have been found only at Saturn and Uranus. All three groups of moons are irregularly shaped and probably consist primarily of ice.

Three shepherds — Atlas, Pandora and Prometheus — are believed to play a key role in defining the edges of Saturn's A- and F-rings. The orbit of Atlas lies several hundred miles (or kilometers) from the outer edge of the A-ring. Pandora and Prometheus, which orbit on either side of the F-ring, constrain the width of this narrow ring and may cause its kinky appearance.

The co-orbital moons Janus and Epimetheus, discovered in 1966 and 1978, respectively, exist in an unusual dynamic situation. They move in almost identical orbits. Every four years, the inner moon (which orbits slightly faster than the outer one) overtakes its companion. Instead of colliding, the moons exchange orbits. The four-year cycle then begins again. Perhaps these two moons were once part of a larger body that disintegrated after a major collision.

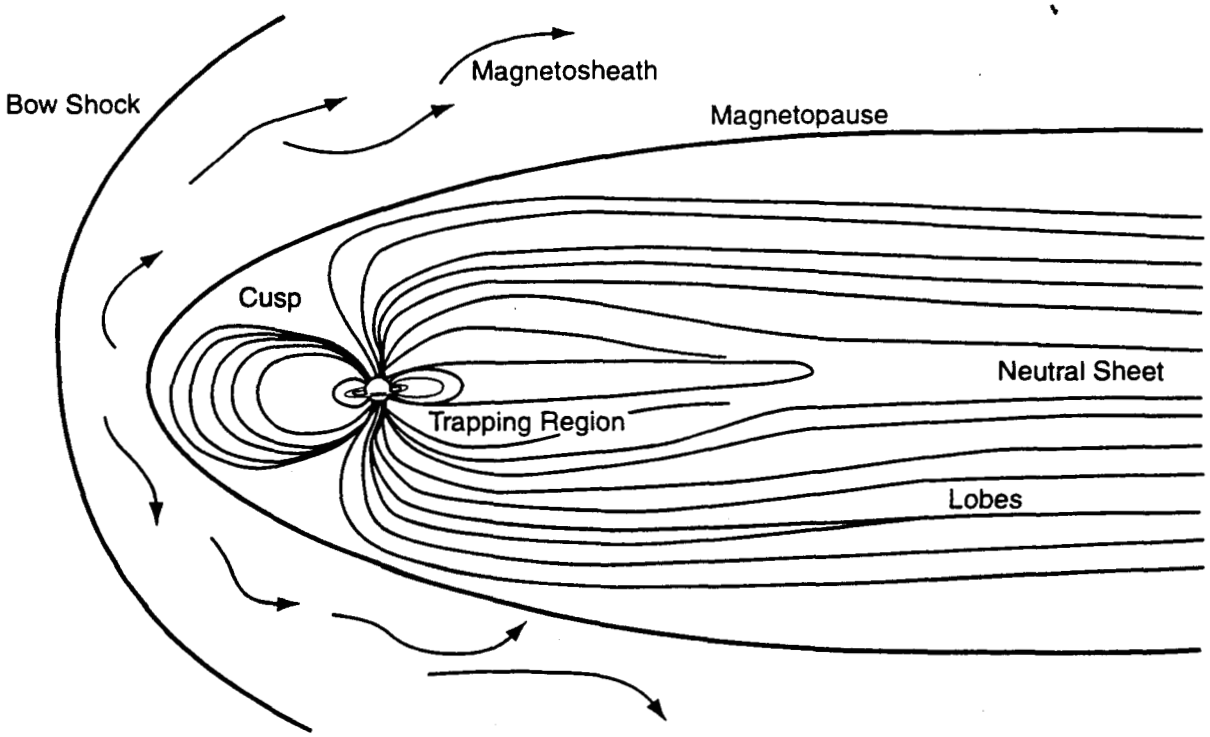

Saturn's magnetosphere

The three other small moons of Saturn — Calypso, Helene and Telesto — orbit in the Lagrangian points of larger moons, one associated with Dione and two with Tethys. The Lagrangian points are locations within an object's orbit in which a less massive body can move in an identical, stable orbit. The points lie about 60 degrees in front of and behind the larger body. (Although no other known moons in the solar system are Lagrangians, the Trojan asteroids orbit in two of the Lagrangian points of Jupiter. Mars also has an asteroid at one Lagrangian point.)

Telescope observations showed that the surface of Hyperion, which lies between the orbits of Iapetus and Titan, is covered with ice. Because Hyperion is not very reflective, its ice must be mixed with a significant amount of darker, rocky material. The color of Hyperion is similar to that of the dark side of Iapetus and D-type asteroids: all three bodies may be rich in primitive material rich in organic compounds. Although Hyperion is only slightly smaller than Mimas, it has a highly irregular shape which, along with a battered appearance, suggests that it has been subjected to intense bombardment and fragmentation. There is also evidence that Hyperion is in a chaotic rotation — probably the result of tidal forces during close passages of nearby Titan.

Saturn's outermost moon, Phoebe, a dark object with a surface composition probably similar to that of C-type asteroids, is in a wrong-way orbit compared to the other moons (this is called a "retrograde" orbit). The orbit is also highly inclined, taking Phoebe high above and below the plane on which the rings and most of the moons orbit. These peculiar orbital charac-

teristics alone suggest that Phoebe may be a captured asteroid. Voyager images show a mottled appearance. Although it is smaller than Hyperion, Phoebe has a nearly spherical shape.

Pan, the 18th known moon of Saturn, was discovered in 1990 in Voyager 2 images that were taken in 1981. This small object is embedded within the A-ring and helps to clear the particles out of the Encke division.

The Magnetosphere

Saturn, its moons and rings sit inside an enormous bubble in the solar wind created by the planet's strong magnetic field. This "sphere of influence" of Saturn's magnetic field — called a magnetosphere — resembles a similar, but smaller, magnetic bubble surrounding Earth. The same kind of structure envelopes Jupiter and several other bodies in the solar system. A supersonic "solar wind" of electrically charged particles blows outward from the Sun within our star's own magnetosphere. The pressure of this solar wind against a planet's magnetosphere compresses the sunward side of the sphere and blows past the planet, giving the magnetosphere a drawn-out shape like that of a comet.

Inside Saturn's vast magnetospheric bubble is a mixture of particles including electrons, various species of ions and neutral atoms and molecules, several populations of very energetic charged particles (like those in Earth's Van Allen Belts) and charged dust grains. The charged particles and dust grains all interact with both the steady and the fluctuating electric and magnetic fields present throughout the magnetosphere.

The primary sources of particles in Saturn's magnetosphere are thought to be the moons Dione and Tethys, which are bombarded by the more energetic particles. But the solar wind, ionosphere, rings, Saturn's atmosphere, Titan's atmosphere and the other icy moons are sources as well.

The mysterious "spokes" in the rings of Saturn are probably caused by electrodynamic interactions between the tiny charged dust particles in the rings and the magnetosphere. Aurora, which exist on Saturn as well as Earth, are produced when trapped charged particles spiral down along magnetic field lines leading to the planet and collide with gases in the atmosphere. Scientists generally agree that the internal magnetic fields of the giant planets arise from an electrical field generated somewhere inside the planets' liquid interiors. Saturn's interior is probably quite exotic because of the great pressures caused by its large size. There may be a molten rocky core, but wrapped around this core scientists would expect to find layers of uncommon materials such as liquid metallic hydrogen and perhaps liquid helium.

Making measurements close to the planet over a wide range of latitudes and longitudes, Cassini will measure the details of the gravitational and magnetic field and tell us more about Saturn's interior. The spacecraft's magnetometer will measure the strength and direction of the magnetic field throughout the magnetosphere — close to the planet where the field is nearly dipolar, and further from the planet where electrical currents create a non-dipolar field. The magnetometer will measure the planet's magnetic field with sufficient accuracy to determine if

it is indeed symmetrical. If so, the basic tenets of the dynamo theory invented to explain planetary magnetic fields may need to be reexamined.

Among all the planets with magnetic fields, there are two main sources of energy driving magnetospheric processes: the planet's rotation and the solar wind. In turn there are two types of large-scale plasma flow within the magnetosphere — co-rotation and convection. The nature of the large-scale circulation of particles in the magnetosphere depends on which source is dominant. At Earth, the energy is derived primarily from the solar wind; at Jupiter it is derived from the planet's rapid rotation rate. Saturn's magnetosphere is especially interesting because it is somewhere in between; both energy sources should play an important role.

The rotation of Saturn's magnetic field with the planet creates a large electric field that extends into the magnetosphere. The combination of this electric field and Saturn's magnetic field create electromagnetic forces that cause charged plasma particles to "co-rotate" (rotate together with Saturn and its internal magnetic field) as far out as Rhea's orbit.

The other large-scale flow of charged particles, convection, is caused by the solar wind pulling the lines of the magnetic field toward the tail of the magnetosphere. This leads to a plasma flow from dayside to nightside on open field lines, as well as a return flow from nightside to dayside on closed field lines (particularly near the equatorial plane).

Saturn has an ionosphere, a thin layer of partially ionized gas at the top of the sunlit atmosphere. Collisions between particles in the atmosphere and the ionosphere create a frictional drag that causes the ionosphere to rotate together with Saturn and its atmosphere.

Mission Overview

The Cassini mission will span 11 years, including 6-1/2 years of interplanetary cruise and four years in orbit at Saturn. Along the way the spacecraft will fly by several planets, making use of their gravitational energy to speed its flight toward Saturn.

Launch

Launch periods. Given the relative positions of the planets and the trajectory Cassini must fly, the primary launch period opens on October 6, 1997, and continues through November 15.

The best conditions exist from October 6 through November 4; launching between those dates would result in Cassini arriving at Saturn in July 2004. The period from November 5 to 15 is considered a contingency period; Cassini's launch is still feasible but less desirable, as more spacecraft propellant would be needed to refine its flight path and the arrival at Saturn would be delayed by many months. A launch from November 5 through 9 would place the spacecraft at Saturn in December 2004; launching from November 10 through 13, Cassini would arrive at Saturn in July 2005. Launching on November 14 or 15 would deliver the spacecraft to Saturn in December 2005.

Secondary and backup trajectories exist in the unplanned event that Cassini is not launched during the primary launch period. Both require the spacecraft to fly a Venus-Earth-Earth gravity assist (VEEGA) trajectory instead of the Venus-Venus-Earth-Jupiter (VVEJGA) trajectory required for the primary launch period.

The secondary launch period is a 45-day period between November 28, 1997, and January 11, 1998. The spacecraft's arrival at Saturn would be October 13, 2006, after a flight of 8.8 years. The significant difference between this mission and the primary one is a longer interplanetary cruise and poorer illumination of Saturn's rings due to their changing angle relative to the Sun and Earth.

There is also a backup launch period from March 19 through April 5, 1999, requiring a flight of 9.8 years to Saturn with an arrival date of December 22, 2008. This mission entails a much longer flight time to Saturn. Studies of Saturn's rings would be significantly degraded due to the angle of the rings. Due to the long flight time, electrical power output from the radioisotope thermoelectric generators would be degraded. This would result in fewer instruments being allowed to operate at a given time, or in lower power states, or with less engineering support for a suite of instruments.

Daily window. The launch window runs on October 6 opens at 5:39 a.m. Eastern Daylight Time and extends for 140 minutes. After that date, the opening time of the launch window moves earlier by about six minutes daily. The length of the window on subsequent days remains at 140 minutes per day.

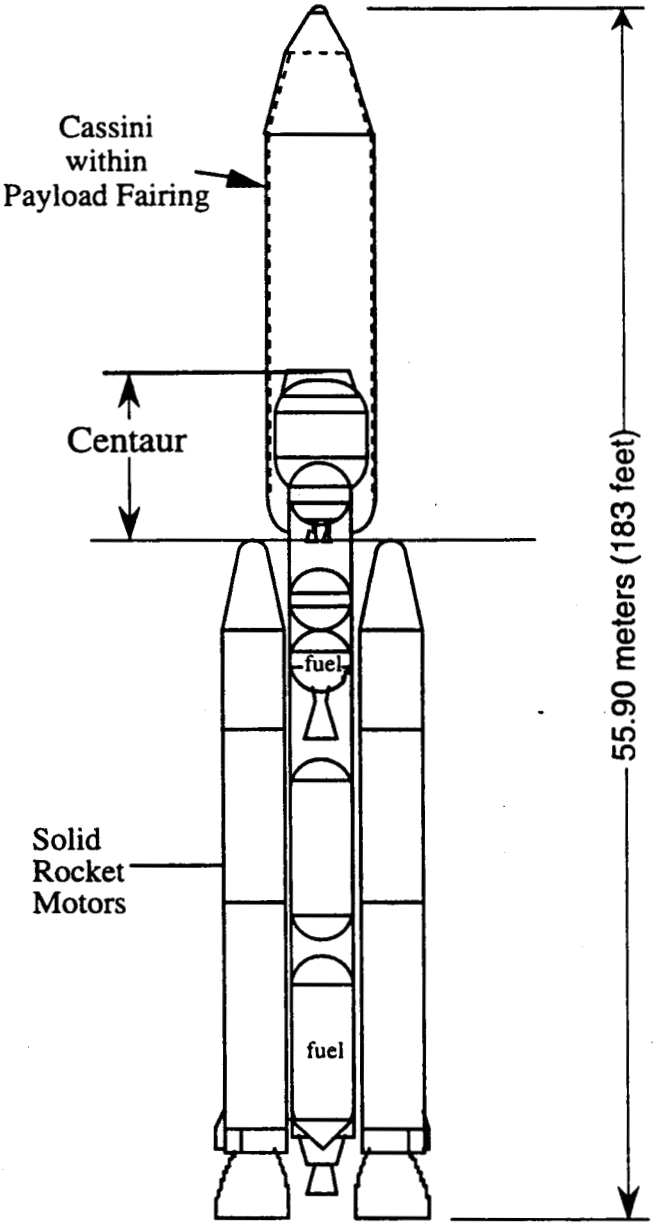

Cassini's Titan IVB launch vehicle

Launch Vehicle

The Titan IVB launch vehicle consists of two upgraded solid rocket motors (known as SRMUs); a two-stage liquid-propellant core; a liquid-fuel upper stage; and a payload fairing.

The three-segment SRMUs are 10.5 feet (3.2 meters) in diameter and 112.4 feet (34.2 meters) long. Each motor contains 688,853 pounds (312,458 kilograms) of hydroxyl terminated polybutadiene (HTPB) propellant and provides a maximum thrust of 1.7 million pounds (7.56 million newtons) at sea level. Flight control is achieved by directing the thrust through a gim-

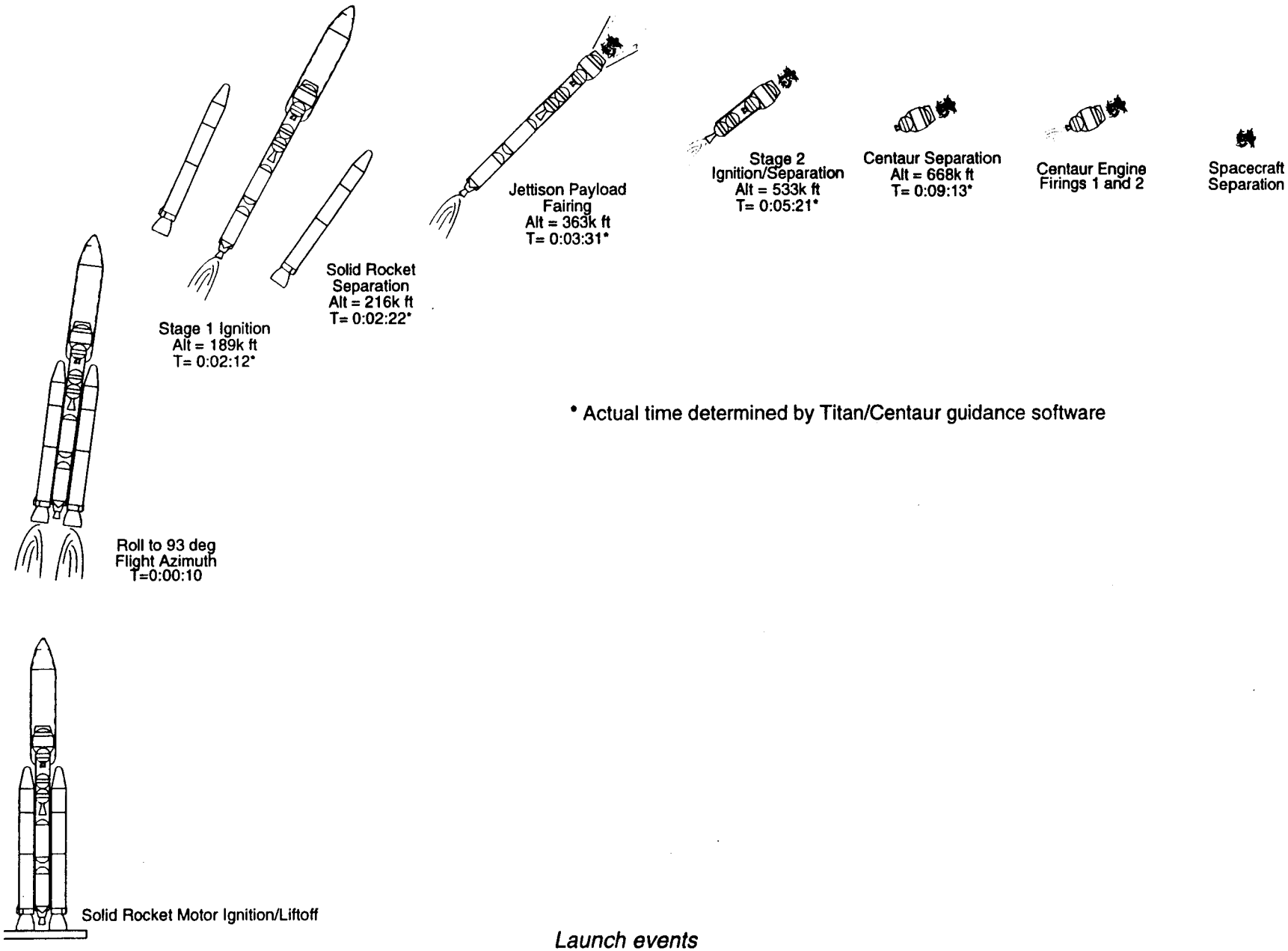

* Actual time determined by Titan/Centaur guidance software

Launch events

baled nozzle controlled by hydraulic actuators. Six staging rockets on each SRMU ensure positive separation from the core following SRMU burnout.

The first stage of the 10-foot-diameter (3.04-meter) core is powered by a twin assembly LR87-AJ-11 engine, while the second stage is powered by a single assembly LR91-AJ-11 engine. Both stages use storable hypergolic propellants (propellants that ignite when they come in contact with each other). The fuel is aerozine 50, a 50-50 mixture of hydrazine and unsymmetrical dimethyl hydrazine. During combustion, the fuel is mixed with nitrogen tetroxide as an oxidizer.

Vehicle flight control and navigation for the Titan are provided by the guidance control unit, which includes a flight control subsystem and an inertial measurement subsystem. The first stage separates from the second stage when the second-stage engine ignites. Separation of the second stage and the Centaur upper stage is achieved when four retrorockets fire and a structural adapter is severed by pyrotechnics called "SuperZip."

The payload fairing is 16.7 feet (5.9 meters) in diameter, 66 feet (20 meters) long and has an aluminum structure.

Centaur upper stage. The Centaur upper stage, produced by Lockheed Martin Astronautics, is 29.45 feet (8.9 meters) long and 14 feet (4 meters) in diameter. It provides 33,000 pounds (147,000 newtons) of engine thrust using cryogenic liquid oxygen and liquid hydrogen.

Launch Events

Variations in launch date have minimal impact on the launch sequence of events through and including the first firing of the Centaur upper stage. A launch slip would shift the entire sequence equally. But the sequence of events following the first Centaur firing — including the coast period in parking orbit and the Centaur's second firing — would depend on the launch slip.

Launch begins with the ignition of the solid rocket motors, which burn for 2 minutes, 22 seconds to an altitude of approximately 216,500 feet (66,000 meters). The first stage of the liquid-fueled Titan ignites at 2 minutes, 12 seconds into flight at an altitude of about 189,000 feet (58,000 meters).

At an altitude of approximately 363,000 feet (110,600 meters) and 3 minutes, 31 seconds into flight, the payload fairing that surrounds the spacecraft is jettisoned. Ignition of the Titan's second stage occurs at 5 minutes, 21 seconds into flight at an altitude of approximately 533,000 feet (162,500 meters). At approximately 9 minutes, 13 seconds into flight at an altitude of about 668,000 feet (203,600 meters), the Centaur upper stage and the Cassini spacecraft separate from the Titan. (The exact time of separation — and the actual start times, burn durations and separation of the Centaur from Cassini — are determined by Titan/Centaur guidance software.)

At Titan-Centaur separation, flight control is transferred to the Centaur. Following separation, the Centaur completes a pre-burn sequence and is ignited for the first of two burns in what is referred to as main engine start #1. The burn ends after 131 seconds at main engine cutoff #1. After some settling time, the spacecraft and Centaur are injected into a parking orbit with a perigee (closest point to Earth) of 105 miles (170 kilometers) perigee and an apogee (farthest point from Earth) of 276 miles (445 kilometers), with an orbital inclination between 28.6 and 31.6 degrees, depending on the time of launch. This parking orbit is designed to provide an orbital lifetime of about 20 days in case the Centaur fails to restart its main engine successfully. The Centaur/spacecraft combination will coast in parking orbit until trajectory conditions are right for interplanetary injection. The coast time in parking orbit between the first main engine cutoff and the engine restart will be 8 to 32 minutes if launch takes place in the primary period, depending on the time and day liftoff occurs. The coast duration is about 14 minutes for an October 6 launch date at the opening of the daily window.

Toward the end of this coast period, the Centaur is oriented for its second burn using thrusters. After the Centaur engine is restarted, it will burn for approximately 7 to 8 minutes. Some 30 seconds after the conclusion of this second burn, the Centaur issues a command instructing the Cassini spacecraft to prepare for separation from the Centaur. By five minutes after the second Centaur engine cutoff, the Centaur orients Cassini's high-gain antenna to point toward the Sun and begins to roll to the separation attitude. This maneuver is completed by 6 minutes after the second engine cutoff. Six minutes after the second engine cutoff, the Cassini spacecraft receives a command instructing it to fire explosive devices separating it from the Centaur. Final separation is completed by 6-1/2 minutes after the second Centaur engine cutoff.

Post-Separation Events

After separating from the Centaur, Cassini's attitude control and articulation subsystem gains control over the spacecraft and ensures that the high-gain antenna is pointed toward the Sun to keep the rest of the spacecraft shaded. The onboard computer then places the spacecraft in a "safe" state so that it could operate autonomously for up to 10 days in the event of telecommunications problems. The Canberra, Australia, complex of NASA's Deep Space Network will be the first to acquire Cassini's signal.

The Centaur executes a collision and contamination avoidance maneuver that prevents it from impacting either Venus or the spacecraft. This burn occurs approximately 20 minutes after separation to allow the Cassini spacecraft and the Centaur to drift apart, insuring that the plume from the Centaur's reaction control thrusters does not impact the spacecraft. About eight minutes later, the Centaur executes a "blowdown" maneuver to expel unused propellant and to further reduce the probability of impact with Cassini or Venus. About an hour after separation, the Centaur depletes the hydrazine from its reaction control subsystem. The Centaur mission ends approximately 87 minutes after separation. By this time, Cassini has its high-gain antenna pointed toward the Sun, is transmitting real-time telemetry via one of its two low-gain antennas, and is awaiting instructions from the ground.

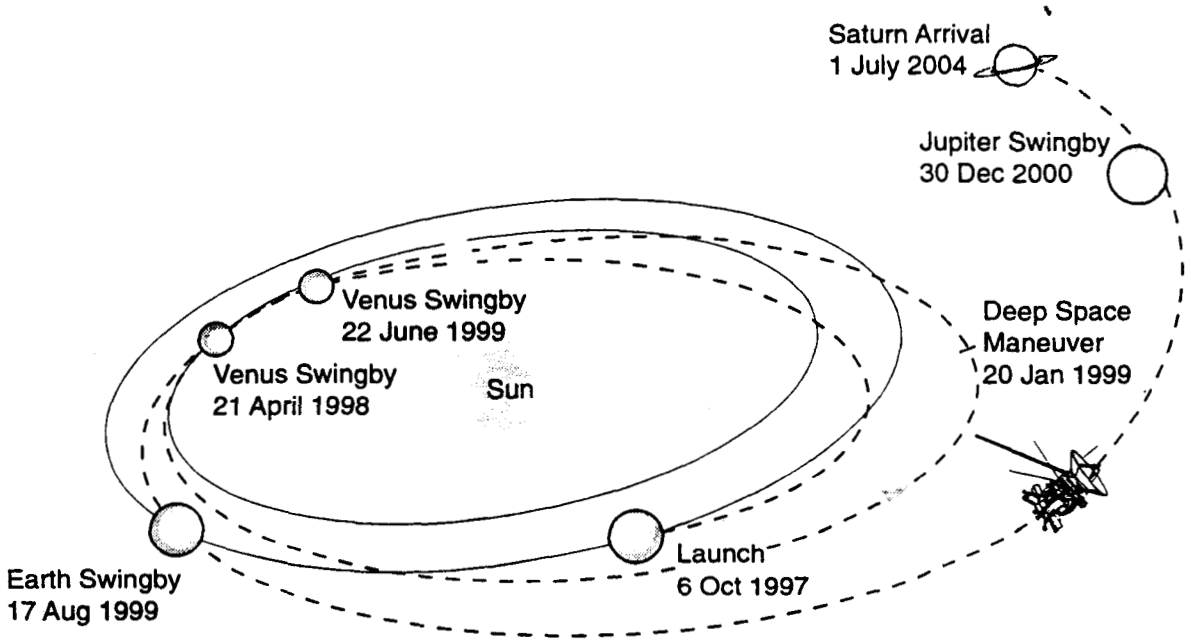

Interplanetary Trajectory

Approximately two days after launch, ground controllers will send to Cassini the sequence of computer commands to control the spacecraft for the following week. This sequence will include a trajectory correction maneuver in which Cassini fires its onboard thrusters to fine-tune its flight path. The next four or five command sequences sent to the spacecraft also will control the spacecraft for about one week each.

Cruise Phase

In maneuvers called gravity-assist swingbys, Cassini will fly twice around Venus and once each past Earth and Jupiter. The spacecraft's speed relative to the Sun increases as it approaches and swings past each planet, giving Cassini the cumulative boost it needs to reach Saturn. The gravity-assist technique has been used extensively in the planetary exploration program to send spacecraft from one planet to another, and to increase a spacecraft's speed. In orbit around their respective planets, Galileo at Jupiter and Cassini at Saturn often use gravity assists to navigate from one large moon to the next.

Cassini will make two gravity-assist swingbys of Venus — one on April 21, 1998, at an altitude of about 185 miles (about 300 kilometers), and another on June 22, 1999, at an altitude of 950 miles (1,530 kilometers). These will be followed by a swingby of Earth occurring August 17, 1999, at an altitude of 500 miles (800 kilometers) or higher. As the spacecraft heads outward into the solar system it will make a swingby of Jupiter on December 30, 2000, passing within about 6 million miles (about 9,655,000 kilometers) of the planet.

Plans call for Cassini to carry out a low-activity flight plan during which only essential engineering and navigation activities such as trajectory correction maneuvers will be performed. The science instruments are planned to be turned off except for a few maintenance activities.

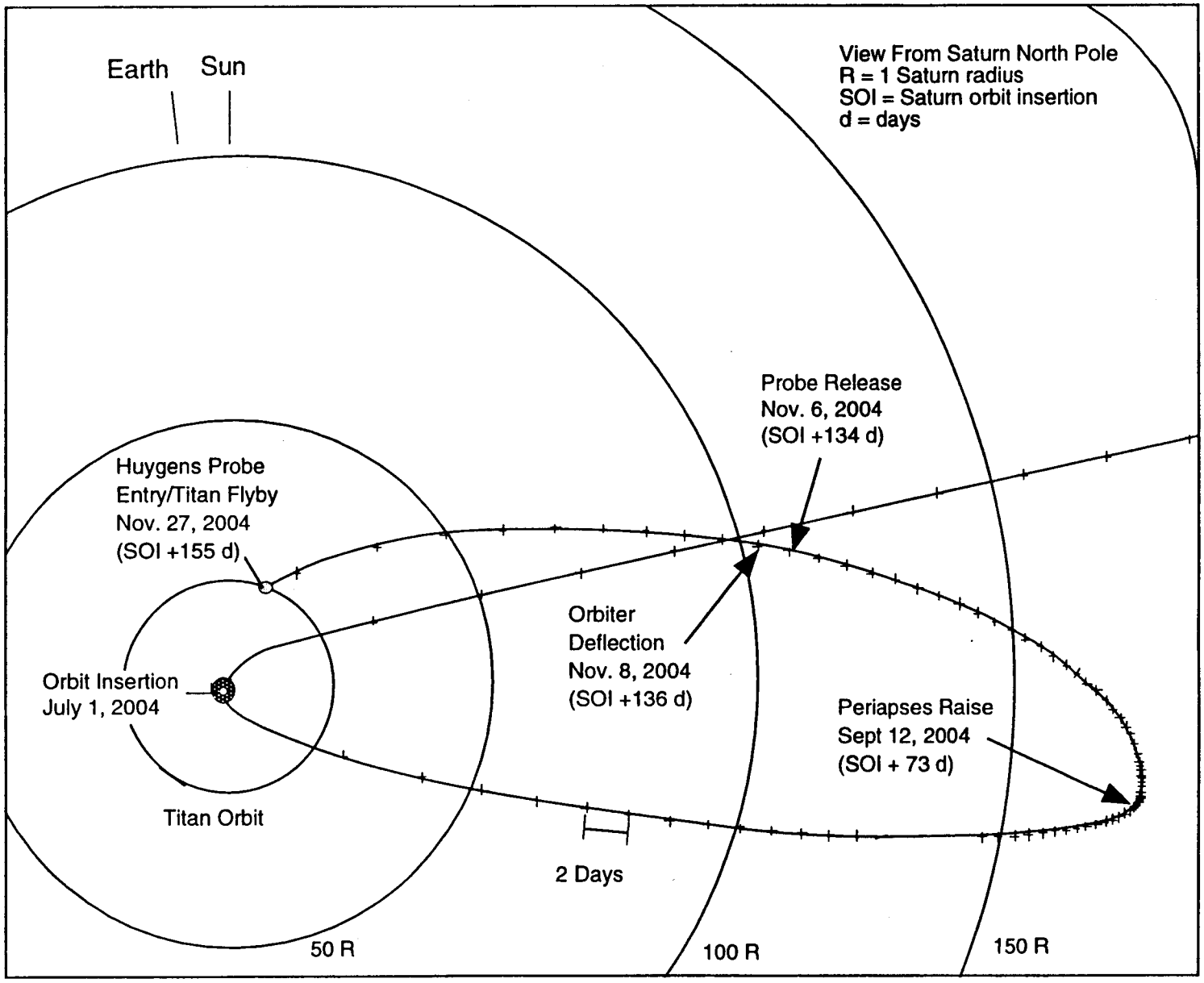

Saturn arrival

These include a single post-launch checkout of all of Cassini's science instruments, as well as calibration of Cassini's magnetometer during its subsequent Earth flyby. Huygens probe health checks are scheduled to occur every six months. No science observations are planned at Venus, Earth or Jupiter.

Two years before Saturn arrival, science instruments on the Cassini orbiter will be turned on, calibrated and begin collecting data.

Saturn Arrival

The most critical phase of the mission after launch is Saturn orbit insertion. When Cassini reaches Saturn on July 1, 2004, the spacecraft will fire its main engine for 94 minutes to brake its speed and allow it to be captured as a satellite of Saturn. Passing through the dusty outermost ring of Saturn — called the E-ring — Cassini will swing close to the planet to begin the first of some six dozen orbits to be completed during the rest of its four-year primary mission.

The arrival period also provides a unique opportunity to observe Saturn's rings and the planet itself, as this is the closest approach the spacecraft will make to Saturn during the entire mission. A maneuver to lower the inclination of Cassini's orbit, called a periapsis-raise maneuver, will be performed in September 2004 to establish the geometry for the entry of the Huygens probe when it is released during Cassini's first Titan flyby.

The Huygens Probe Mission

The Huygens probe will be carried to Saturn's system by Cassini. Bolted to Cassini and fed electrical power through an umbilical cable, Huygens will ride along during the seven-year journey largely in a "sleep" mode, awakened every six months for three-hour instrument and engineering checkups.

Some 22 days before it hits the top of Titan's atmosphere, Huygens will be released from Cassini on November 6, 2004. With its umbilical cut and bolts released, Huygens will spring loose from the mother ship and fly on a ballistic trajectory to Titan. The probe will spin at 7 rpm for stability. Onboard timers will switch on the probe systems before the probe reaches Titan's upper atmosphere.

Two days after the probe's release, the orbiter will perform a deflection maneuver; this will keep Cassini from following Huygens into Titan's atmosphere. This maneuver will also establish the required geometry between the probe and the orbiter for radio communications during the probe descent; in addition, it will also set the initial conditions for Cassini's tour of Saturn's moons, which starts right after the completion of the Huygens probe mission.

The Huygens probe carries two microwave S-band transmitters and two antennas, both of which will transmit to the Cassini orbiter during the probe's descent. One stream of telemetry is delayed by about six seconds with respect to the other to avoid data loss if there are brief

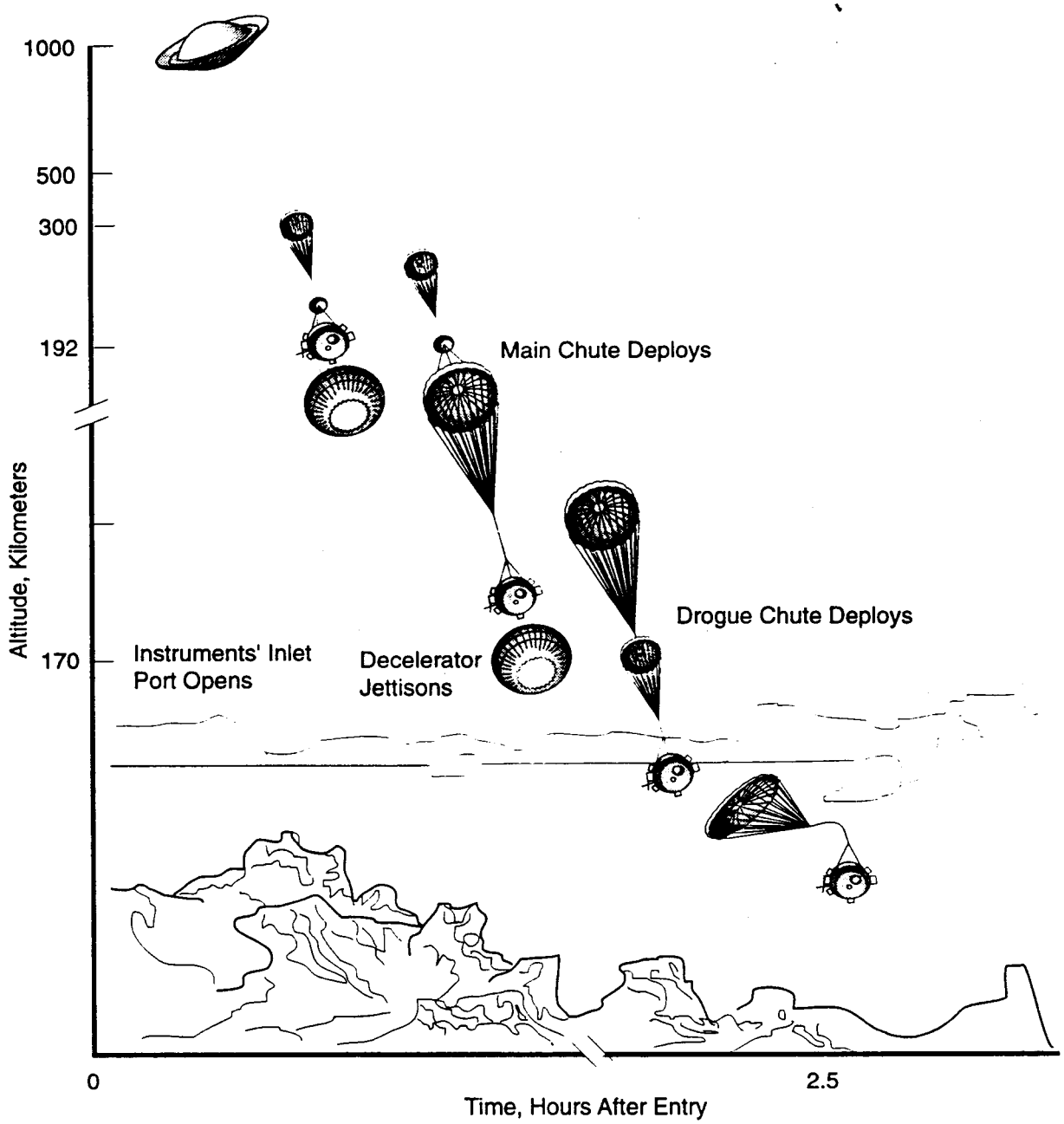

Huygens' descent to Titan

transmission outages.

Probe descent will take place November 27, 2004. Huygens will enter Titan's atmosphere at a speed of some 12,400 miles per hour (about 20,000 kilometers per hour). It is designed to withstand the extreme cold of space (about -330 F (-200 C)) and the intense heat it will encounter during its atmospheric entry (more than 21,600 F (12,000 C)).

Huygens' parachutes will further slow the descent so the probe can conduct an intensive program of scientific observations all the way down to Titan's surface. When the probe's speed

has moderated to about 870 miles per hour (1,400 kilometers per hour), the probe's after cover is pulled off by a pilot parachute. A 27-foot-diameter (8.3-meter) main parachute is then deployed to ensure a slow and stable descent. The main parachute slows the probe and allows the decelerator and heat shield to fall away when the parachute is released.

To limit the duration of the descent to a maximum of 2-1/2 hours, the main parachute is jettisoned 900 seconds after the probe has entered the top of the atmosphere. A smaller, 9.8-foot-diameter (3-meter) drogue chute deploys to support the probe for the remainder of the descent. The batteries and other resources are sized for a maximum mission duration of 153 minutes — including at least three minutes on the surface, but possibly up to a half an hour there if the descent takes less time than expected.

During the first part of the probe's descent, instruments onboard Huygens probe are controlled by a timer. During the final 6 to 12 miles (10 to 20 kilometers) of descent, instruments will be controlled on the basis of altitude measured by the radar altimeter.

Throughout the descent, Huygens' atmospheric structure instrument will measure more than six physical properties of the atmosphere. The gas chromatograph and mass spectrometer will determine the chemical composition of the atmosphere as a function of altitude. The aerosol collector and pyrolyzer will capture aerosol particles — fine liquid or solid particles suspended in the atmosphere — heat them and send the resulting vapor to the chromatograph/spectrometer for analysis.

Huygens' descent imager and spectral radiometer will take pictures of cloud formations and Titan's surface, and also determine the visibility within Titan's atmosphere. As the surface looms closer, the instrument will switch on a bright lamp and measure the spectral reflectance of the surface. Throughout the descent, the Doppler shift of Huygens' radio signal will be measured by the Doppler wind experiment onboard the Cassini orbiter to determine Titan's atmospheric winds, gusts and turbulence. As the probe is shifted about by winds, the frequency of its radio signal would change slightly in what is known as the Doppler effect — similar to how the pitch of a train whistle appears to rise and then fall as the train passes. Such changes in frequency can be used to deduce the wind speed experienced by the probe.

As Huygens nears impact, its surface science package will activate a number of instruments to measure surface properties. Huygens will impact the surface at about 15 miles per hour (25 kilometers per hour); the chief uncertainty is whether its landing will be a thud or a splash. If Huygens lands in liquid, these instruments will measure the liquid's properties while the probe floats for a few minutes.

If Huygens lands in liquid ethane it will not be able to return data for very long, because the extremely low temperature of this liquid (about -290 F (-180 C)) would prevent the batteries from operating. In addition, if liquid ethane permeates the probe's science instrument packages, the radio would be badly tuned and probably not operate.

Assuming Huygens continues to send data to Cassini from Titan's surface, it will be able

to do so for a maximum of about 30 minutes, when the probe's battery power is expected to run out and the Cassini orbiter disappears over the probe's horizon.

The Orbital Tour

After the end of the Huygens mission, Cassini will continue its four-year orbital tour, consisting of more than 70 orbits around Saturn that will be shaped by gravity-assist flybys of Titan, or by firings of Cassini's thrusters or main engine. The size of these orbits, their orientation to the Saturn-Sun plane and their inclination to Saturn's equator are dictated by various scientific requirements. These include: imaging radar coverage of Titan's surface; flybys of selected icy moons, Saturn or Titan; occultations by Saturn's rings; and crossings of the ring plane.

Cassini will make at least six close targeted flybys of selected icy moons of greatest interest — Iaptetus, Enceladus, Dione and Rhea. Images taken with Cassini's high-resolution telescopic cameras during these flybys will show surface features equivalent in size to a baseball diamond. At least two dozen more distant flybys (at altitudes of about 60,000 miles (100,000 kilometers)) will be made of the major moons of Saturn other than Titan. The varying inclination angle of Cassini's orbits also will allow studies of Saturn's polar regions in addition to the planet's equatorial zone.

Titan is the only Saturn moon large enough to enable significant gravity-assist changes in Cassini's orbits, though some of the other moons can help to accomplish more modest adjustments with their small gravitational effect on Cassini's flight path. Precise navigation and targeting of the point at which Cassini flies by Titan will be used to shape the orbital tour in the same way the Galileo mission has used its encounters of Jupiter's large moons to shape its Jovian tour.

End of Prime Mission

The prime mission tour concludes on July 1, 2008, four years after Saturn arrival and 33 days after the last Titan flyby, which occurs on May 28, 2008. The aim point of the final flyby is chosen to position Cassini for a Titan flyby on July 31, 2008 — providing the opportunity to proceed with more flybys during an extended mission, if resources allow. Nothing in the design of the tour precludes an extended mission.

Mission Operations

Two-way communication with Cassini will be through the large dish antennas of NASA's worldwide Deep Space Network. The spacecraft will transmit and receive in the microwave X-band, using either its parabolic high-gain antenna or one of its two low-gain antennas. The high-gain antenna is also used for radio and radar experiments and for receiving signals from the Huygens probe.

Because Cassini's science instruments are fixed and the entire spacecraft must be turned to point them, the spacecraft will be frequently reoriented by using either gyroscope-like reac-

tion wheels or the spacecraft's set of small onboard thrusters. Consequently, most science observations will be made without a real-time communications link to Earth. Data will be stored on Cassini's two solid-state data recorders, each with a capacity of about 2 gigabits (equivalent to about 200 megabytes each).

Each of Cassini's science instruments is run by a microprocessor capable of controlling the instrument and formatting/packetizing data. Ground controllers will run the spacecraft with a combination of some centralized commands to control system-level resources, and some commands issued by the individual science instruments' microprocessors. Packets of data will be collected from each instrument on a schedule that may vary at different times. Data packets are either stored on Cassini's onboard solid-state recorders or transmitted to Earth.

Mission controllers, engineering teams and science teams will monitor telemetry from the spacecraft and look for anomalies in real time. The flight systems operations team retrieves engineering data to determine the health, safety and performance of the spacecraft, and processes the tracking data to determine and predict the spacecraft's trajectory. Data will normally be received by the Deep Space Network with one tracking pass by one antenna per day, with occasional extra coverage for special radio science experiments.

Spacecraft operations during Cassini's interplanetary cruise will be centralized at JPL. During the Saturn tour, a system of distributed science operations will be implemented with centralized spacecraft control continuing at JPL. The concept is to allow scientists to operate their instrument from their home institution with as much ease as possible and with the minimum interaction necessary to collect their data.

Cost-Saving Approaches

Because of the need to reduce the cost of activities before launch and during Cassini's nearly seven-year-long cruise, the development of many operations capabilities has been deferred until after launch.

The following are among choices made to reduce costs and simplify mission operations:

❑ *Limited science*. To reduce costs, there is no plan to acquire science data during Cassini's interplanetary cruise, including its flybys of Venus, Earth and Jupiter. The only exception is a gravitational wave experiment; this will attempt to detect gravitational waves emitted by supermassive objects such as quasars, active galactic nuclei or binary black holes.

❑ *Strict modes of operation*. Cassini's power system cannot supply enough electricity to run all science instruments simultaneously. In addition, science instruments cannot all be pointed optimally at the same time because of the fact that they are fixed to the body of the spacecraft. Mission planners therefore developed a concept of operational modes designed to reduce operational complexity. Under this approach, instruments will be operated in a series of standard, well-characterized configurations, identifying the on/off state of each instrument, minimum and maximum power and peak data rates allocated for each instrument, and states of the

engineering subsystems (radio, recorder, attitude and articulation control, and propulsion).

❑ *Standardized, reusable sequence templates.* Ninety-eight percent of Cassini's Saturn tour will be conducted with a small number of reusable software modules and templates that dictate how science instruments are controlled. The remaining two percent (seven days per year) may consist of unique software command sequences developed for special occasions.

❑ *No sequence team.* Mission planning and the development of command sequences will be led by "virtual teams" made up of representatives of the various science experiment or subsystem teams involved in a given procedure. This approach replaces the traditional custom of a "sequence team" responsible for developing the sequences of commands used to control the spacecraft and its instruments.

The Cassini program has remained on schedule and within budget since its inception.

The Spacecraft

The Cassini spacecraft is a two-part structure, composed of the orbiter and the Huygens Titan probe. The orbiter is designed to enter orbit around Saturn; deliver Huygens to its destination and relay the probe's data; and conduct at least four years of detailed studies of Saturn's system. Huygens is designed to remain primarily dormant throughout Cassini's journey, then spring into action when it reaches the top of Titan's atmosphere. There, Huygens will deploy its parachutes and conduct 2-1/2 hours of intensive measurements as it descends through Titan's atmosphere, all the while transmitting its findings to the Cassini orbiter for relay back to Earth.

The Cassini Orbiter

The Cassini orbiter alone weighs 4,685 pounds (2,125 kilograms). When the 705-pound (320-kilogram) Huygens probe and a launch vehicle adapter are attached, and 6,905 pounds (3,132 kilograms) of propellants are loaded, the spacecraft at launch will weight 12,593 pounds (5,712 kilograms). More than half the spacecraft's mass is propellant — much of which is needed for Cassini's 94-minute main engine firing that brakes it into orbit around Saturn.

The spacecraft stands 22.3 feet (6.8 meters) high and is 13 feet (4 meters) wide. The magnetometer instrument is mounted on a 42-foot-long (13-meter) boom that extends outward from the spacecraft; three other rod-like antenna booms, each measuring about 32 feet (10 meters), extend outward from the spacecraft in a Y-shape. Most of the spacecraft and its instrument housings are covered with multiple-layered, shiny amber-colored or matte-black blanketing material. The blankets protect Cassini against the extreme heat and cold of space, and maintain the room temperature operating environment needed for computers and other electronic systems onboard. The blanketing includes layers of material like that used in bullet-proof vests to afford protection against dust-size particles called micrometeoroids that zip through interplanetary space.

The spacecraft's complexity is necessitated both by its flight path to Saturn and by the ambitious program of scientific observations to be accomplished at Saturn. Cassini has some 22,000 wire connections and more than 7.5 miles (12 kilometers) of cabling linking its instruments, computers and mechanical devices.

Cassini's cargo of science instruments, the Huygens probe and the enormous quantity of fuel the spacecraft needs to brake into orbit around Saturn make it the largest interplanetary spacecraft ever launched by the United States. (The former Soviet Union's Phobos 1 and 2 Mars craft each weighed 13,713 pounds (6,220 kilograms).) Cassini and Huygens, attached and fueled but without the launch vehicle adapter, weigh about 12,295 pounds (5,577 kilograms). More than half of that mass is liquid fuel. Cassini's fuel mass alone is more than the mass of the Galileo and Voyager spacecraft combined.

The main body of the orbiter is a nearly cylindrical stack consisting of a lower equipment module, a propulsion module and an upper equipment module, and is topped by the fixed

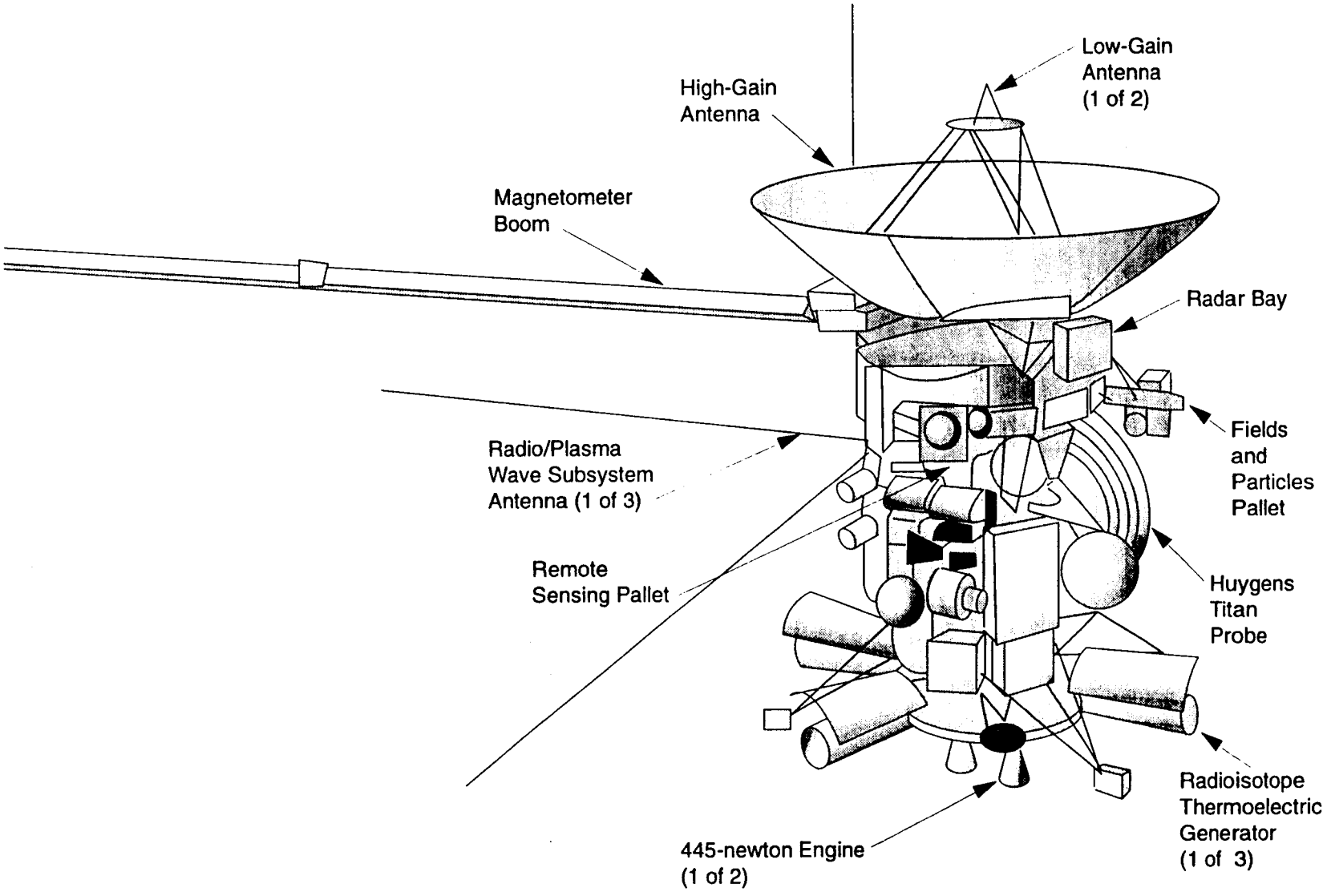

Cassini spacecraft

13-foot-diameter (4-meter) high-gain antenna. Attached about halfway up the stack are a remote sensing pallet, which contains cameras and other remote sensing instruments, and a fields and particles pallet, which contains instruments that study magnetic fields and charged particles. The two pallets carry most of the Cassini orbiter's science instruments. In general the whole spacecraft must be turned to point the instruments in the proper direction, though three of the instruments provide their own articulation about one axis.

Several booms will be deployed early in Cassini's flight. These include three rod-like plasma wave antennas and a 40-foot (11-meter) spring-loaded magnetometer boom that extends from a canister mounted on the upper equipment module.

Software sequences — detailed instructions stored in the spacecraft's computer — direct the activities of the spacecraft. A typical sequence may operate Cassini for a month without the need for intervention from ground controllers. Onboard computers are designed to withstand the radiation environment of deep space, particularly when the Sun is at peak activity. Solar flares, which can last up to several days, can deliver radiation 1,000 times above the usual radiation levels in interplanetary space. Cassini's electronics have undergone customized radiation hardening to ensure that they won't be disrupted or destroyed by such events.

Sophisticated fault protection software resides in the spacecraft's computers to continuously sample and sense the health of the onboard systems. The fault protection system automatically takes corrective action when it determines the spacecraft is at risk due to any onboard failure.

The orbiter receives electrical power from three radioisotope thermoelectric generators (RTGs). These generators produce power by converting heat into electrical energy. RTGs are not reactors, and the radioactive material is neither fissionable nor fusionable. Heat is provided by the natural radioactive decay of plutonium in a ceramic form of mostly plutonium-238; devices called thermocouples turn the heat into electricity to run the spacecraft. Upon arrival at Saturn, the three generators will provide about 675 watts of power. Plutonium dioxide is also used as the heat source in 82 small radioisotope heater units (RHUs) on the Cassini orbiter and 35 on the Huygens probe; each produces about 1 watt of heat to keep nearby electronics at their operating temperatures. RHUs were most recently used on Mars Pathfinder's Sojourner rover to keep its electronics warm during Martian nights. Both RTGs and RHUs have a long and safe heritage of use and high reliability in NASA's planetary exploration program, including the Voyager and Galileo missions.

Propulsion for major changes to Cassini's trajectory is provided by one of two main engines. These powerful engines use monomethylhydrazine as the fuel and nitrogen tetroxide as the oxidizer. Sixteen smaller engines called thrusters use hydrazine to control Cassini's orientation and to make small adjustments to the spacecraft's flight path.

Guidance and control is governed by sensors that recognize reference stars and the Sun, and by onboard computers that determine the spacecraft's position. Using a new type of gyroscope that vibrates rather than spins, the spacecraft can perform turns, twists and propulsion fir-

ings while retaining continuous knowledge of its own position. Unlike spacecraft such as Galileo, the Cassini orbiter is stabilized along all three axes and thus does not normally rotate during its long cruise to Saturn.

The mission's trajectory poses a challenge for controlling the spacecraft's temperature because in the first several years of the mission, the orbiter will be relatively close to the Sun. During this time, the high-gain antenna will be pointed at the Sun and used as a sunshade to shield the rest of the orbiter and probe. Special paints have been used on the antenna to reflect and radiate much of the sunlight received.

Communications with the spacecraft during its passage through the inner solar system will be through one of the orbiter's two low-gain antennas. In late January 2000, as Cassini enters the cooler climes of the asteroid belt and beyond, it will turn its high-gain antenna toward Earth and conduct telecommunications through it for the remainder of the mission.

As Cassini moves farther from the Sun, extreme cold becomes a concern. At Saturn's distance, the intensity of sunlight is approximately 1 percent that at Earth.

Heat within the spacecraft is retained by using lightweight, multiple-layered insulating blankets that have been tailor-made for the instrument housings and other areas of the orbiter. The blanket's outer layer is a three-ply membrane composed of a Kapton core with an aluminized inner surface and a metallic outer surface. The translucent Kapton has a yellow color, and when backed by a shiny aluminum layer, results in an amber appearance. Up to 26 layers of material are used in the blankets, which also afford protection against dust-size micrometeoroids which, traveling at speed of about 10,000 to 90,000 miles per hour (5 to 40 kilometers per second) could otherwise potentially penetrate portions of the spacecraft.

Orbiter Subsystems

The Cassini orbiter contains 12 engineering subsystems that govern spacecraft features and functions including wiring, electrical power, computing, telecommunications, guidance and propulsion.

❑ The **structure subsystem** is the skeleton that provides mechanical support and alignment for all flight equipment, including the Huygens probe. In addition, it provides an equipotential container — an electrical grounding reference — which provides a shield from radio frequency interference, and protection from space radiation and micrometeoroids. The structure subsystem consists of the upper equipment module, which contains the 12-bay electronics bus assembly, instrument pallets and the magnetometer boom; the lower equipment module; plus all the the brackets and structure used to attach the Huygens probe, the low-gain and high-gain antennas, electrical generators, main rocket engines, reaction control thrusters and other equipment. The structure subsystem also includes the adapter which supports the spacecraft on the Centaur upper stage during launch.

❑ The **radio frequency subsystem** provides the telecommunications facilities for the spacecraft, and is also used as part of the radio science instrument. For communications, it produces an X-band carrier signal at a frequency of 8.4 GHz; modulates it with data received from the command and data subsystem; amplifies the X-band carrier power to produce 20 watts from the traveling wave tube amplifiers; and delivers the signal to the antenna subsystem. (The 20 watts is expected to degrade to about 19 watts by the time Cassini reaches Saturn.) From the antenna subsystem, the radio frequency subsystem takes signals transmitted from Earth at a frequency of 7.2 GHz in the microwave X-band; demodulates them; and delivers the commands and data to the command data subsystem for storage and/or execution.

❑ Regulated electrical power and various small pyrotechnic devices on the spacecraft are controlled by the **power and pyrotechnics subsystem**. Operating on command from the central computer system, this subsystem distributes electrical power to instruments and other subsystems on the spacecraft at 30 volts DC. The subsystem also regulates a shunt radiator that can be used to dispose of excess heat. Pyrotechnics include squib devices that will be fired to cut cables and other links that hold the Huygens probe onto the orbiter.

❑ The **command and data subsystem** is Cassini's nervous system — the central processing and delivery clearinghouse of the spacecraft for commands received from the ground and data sent back to Earth. All elements of the subsystem are duplicated with redundant components that can be used in the event of a component failure. The subsystem receives ground commands and data from the radio frequency subsystem, processes the information and distributes it to other subsystems. The command and data subsystem uses one each of the two redundant solid-state recorders and flight computers, which are programmed in the Ada programming language. Memory capacity for each solid-state recorder is 2 gigabits.

Scientific and engineering data from science instruments destined for transmission to Earth are first forwarded to the command and data subsystem for processing and formatting for telemetry, and delivery to the radio frequency subsystem. The command and data subsystem contains software routines that protect the spacecraft in the event of a fault. The software also allows the spacecraft to autonomously respond to faults needing immediate action. Memory for the command and data subsystem is 512 kilo-words of random-access memory (RAM) and 8 kilo-words of programmable read-only memory (PROM).

❑ The **attitude and articulation control subsystem** is the spacecraft's inner ear, continuously sensing and measuring the spacecraft's orientation on its three axes and the spacecraft's position in space relative to Earth, Sun, Saturn and other targets. It provides measurements and controls pointing for spacecraft instruments, including scans that require the spacecraft to roll while an instrument performs an observation. The attitude and articulation control subsystem encompasses a number of sensors including redundant Sun sensor assemblies; stellar reference units, or star trackers; a Z-axis accelerometer; and two 3-axis gyro inertial reference units. Each unit consists of four gyros, three orthogonal to each other and the fourth skewed equidistant to the other three. The subsystem also contains actuators for the main rocket engine gimbals and for the redundant reaction wheel.

With two redundant computers programmed in Ada, the subsystem processes commands from the command and data subsystem and produces commands to be delivered to attitude control actuators and/or spacecraft thrusters or main engines to control Cassini's attitude and to make trajectory changes. The attitude and articulation control subsystem memory has 512 kilobytes of RAM and 8 kilobytes of PROM.

❑ All power and data cabling, except for coaxial cabling and waveguides, make up the **cabling subsystem**. This network of cabling conducts power from the three electrical generators to the power and pyrotechnics subsystem and to the power shunt radiator. It also conducts data between the command and data subsystem and the other subsystems and assemblies on the spacecraft. In addition, cabling allows engineers to access Cassini's electronics during spacecraft integration and testing.

❑ The **propulsion module subsystem** controls the spacecraft's thrust and changes in its attitude. It works under the command of the attitude and articulation control system. Attitude control is provided by the reaction control subsystem, which consists of four clusters of four hydrazine thrusters each. These move the spacecraft to or maintain it in its desired orientation and are used to point the instruments at their targets. The thrusters are also used for executing small spacecraft maneuvers. For larger changes in the spacecraft velocity, the main rocket engine is used. Cassini has a primary and redundant pressure-regulated main engine. Each engine is capable of a thrust of approximately 100 pounds of force (445 newtons). The bipropellant main engines burn nitrogen tetroxide and monomethylhydrazine. The engines are gimbaled so that the thrust vector can be maintained through the shifting center of mass of the spacecraft. Mounted below the main engines is a retractable cover that is used during cruise to protect the main engines from micrometeoroids. The main engine cover can be extended and retracted multiple times (at least 25 times), and has a pyro-ejection mechanism to jettison the cover should there be a mechanical problem with the cover that interferes with main engine operation. During cruise the cover will remain closed when the main engines are not in use.

❑ The **temperature control subsystem** keeps temperatures of the various parts of the spacecraft within allowable limits through a variety of thermal control techniques, many of which are passive. Automatically positioned reflective louvers are located on Cassini's 12-bay electronics bus. Radioisotope heater units are used where constant heat is required. Multilayer insulation blankets cover much of the spacecraft and its equipment. Electric heaters are used in several locations under control of the spacecraft's main computer. Temperature sensors are located at many sites on the spacecraft, and their measurements are used by the command data subsystem to adjust the heaters. The entire spacecraft body and Huygens probe are shaded when necessary by the high-gain antenna.

❑ The **mechanical devices subsystem** provides a pyrotechnic separation device that releases the spacecraft from the launch vehicle adapter. Springs then push the spacecraft away from the adapter. The subsystem includes a self-deploying 40-foot (10.5-meter) coiled mast stored in a canister which supports the magnetometers. It also includes an articulation system for a backup reaction wheel assembly, a "pin puller" for the rod-like antennas of the radio plasma wave spectrometer's Langmuir probe, and louvers for venting or holding heat from the

radioisotope heater units.

❑ The **electronic packaging subsystem** consists of the electronics packaging for most of the spacecraft in the form of the 12-bay electronics bus.

❑ The **solid-state recorder** is the primary memory storage and retrieval device for the orbiter. The spacecraft is equipped with two recorders, each with a capacity of 2 gigabits (1.8 gigabits at end of mission). Before completion of the Huygens descent probe's mission, only one recorder can be used at any time to store science data from the mission. After the Huygens mission, however, both recorders may be used to record and play back science data. Data such as spacecraft telemetry and memory loads for various subsystems may be stored in separate files, or partitions, on the recorder. All data recorded to and played back from the solid-state recorder are handled by the command data subsystem.

❑ The **antenna subsystem** provides a directional high-gain antenna that can transmit and receive on four different bands in the microwave spectrum — X, Ka, S and Ku. The high-gain antenna and low-gain antenna #1 are provided by the Italian space agency. Low-gain antenna #1 is located on the dish structure of the high-gain antenna. Low-gain antenna #2 is located on the Cassini orbiter body below the attach point for the Huygens probe. During the inner solar system cruise, the high-gain antenna is pointed toward the Sun to provide shade for the spacecraft. The two low-gain antennas allow for one or the other to transmit and receive signals in the microwave X-band to and from Earth when the spacecraft is Sun-pointed. The low-gain antennas also provide an emergency telecommunications capability while Cassini is at Saturn.

The Huygens Probe

The Huygens probe system includes the probe itself, which enters the Titan atmosphere, and support equipment that remains attached to the orbiter. The probe weighs 705 pounds (320 kilograms) and consists of three main elements:

❑ A *spin-eject device*, which uses springs to propels the probe away from the orbiter with a relative velocity of about 1 foot per second (0.3 to 0.4 meter per second) and simultaneously causes the probe to spin about its axis of 7 rpm.This device is part of the support equipment.

❑ A *front shield,* 8.8 feet (2.7 meters) in diameter, covered with a special thermal protection material called AQ60, a low-density mat of silica fibers, to protect the probe from the enormous heat generated during entry into Titan's atmosphere.

❑ An *aft cover* that uses thermal protection materials to ensure a slow and stable descent. The main parachute slows the probe and allows the decelerator to fall away when it is released. To limit the duration of the descent to a maximum of 2.5 hours, the main parachute is jettisoned at 900 seconds after atmospheric entry, and is replaced by an approximately 10-foot-diameter (3-meter) drogue chute for the remainder of the descent.

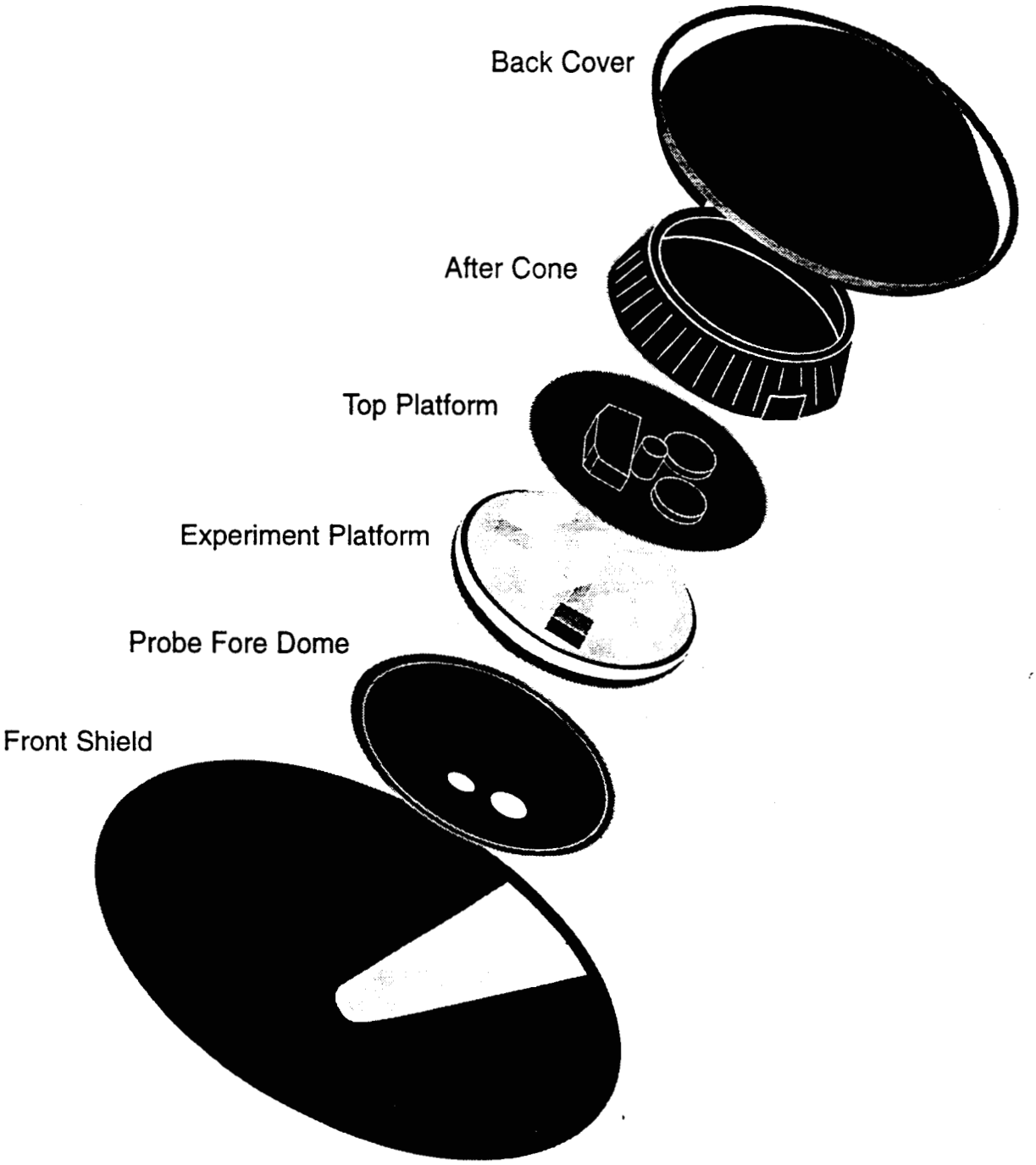

Huygens probe

Inner structure. The probe's interior consists of two aluminum honeycomb platforms and an aluminum shell. It is linked by fiberglass struts and pyrotechnically operated release mechanisms to the front shield and aft cover. The central equipment platform carries, on both its upper and lower surfaces, the boxes containing the electrical subsystems and the experiments. The upper platform carries the stowed parachute and the transmitter used to radio data in the microwave S-band to the Cassini orbiter.

Thermal control. At different phases of the mission, Huygens will be subjected to extremes of heat and cold requiring a variety of passive controls to maintain the required temperature conditions. When the spacecraft is nearer the Sun on the Venus and Earth legs of its trajectory, the probe will receive high solar heat input, but will get some protection by being shaded by the orbiter's high-gain antenna. Multilayered thermal blanketing, which burns off later during Titan atmospheric entry, will also protect the probe from solar heating.

When Cassini leaves the inner solar system, the temperature of the probe will be greatly reduced. After separation from the Cassini orbiter, Huygens will be at its coldest. To ensure that the equipment stays operational, 25 radioisotope heater units (RHUs) are placed in the system. Each RHU, which contains radioactive plutonium dioxide, produces about 1 watt of heat.

During entry into Titan's atmosphere, the front shield may reach temperatures above 2,700 F (1,500 C). Layers of insulation will ensure that the equipment inside stays below 122 F (50 C). Once the chutes are deployed, the probe instruments will be exposed to the cold Titan atmosphere at a temperature of -330 F (-200 C). The internal temperature will be kept within operating limits by thick foam insulation filling the probe and by power dissipation in the experiments and subsystems.

Electrical power. While it is still attached to the Cassini orbiter, the Huygens probe will obtain power from the orbiter via an umbilical cable. After separation, electrical power is provided by five lithium sulfur dioxide batteries, each with 23 cells. Much of the battery power is used to power the Huygens probe's timer for the 22 days of coasting to Titan.

Command and data management. Huygens' command and data management subsystem controls the timing and execution of a number of critical events. It times the coast phase, and switches on the probe just before entry. It controls deployment of various components during descent. It distributes commands to other subsystems and to the experiments. It distributes to the experiments information that provides a timeline of conditions that instruments can use to schedule operations. And it collects scientific and engineering data and forwards them to the orbit during the cruise to Saturn and during the Titan mission.

Probe data relay. The probe data relay subsystem provides the one-way communications link between the Huygens probe and the Cassini orbiter, and includes equipment installed in each spacecraft. Elements that are part of the probe support equipment on the Cassini orbiter include radio frequency electronics (including an ultra-stable oscillator) and a low-noise amplifier. For backup, the Huygens probe carries two S-band transmitters, both of which transmit

during probe descent, each with its own antenna. The telemetry in one link is delayed by about six seconds with respect to the other to avoid data loss if there are brief transmission outages. Reacquisition of the probe signal would normally occur within this interval.

New Technology

A wealth of new technology was developed and qualified for spaceflight by or for the Cassini program. Much of this new technology has already been adopted by other space science programs, in some cases at a discounted cost directly attributable to Cassini. This has enabled the development of new classes of low-cost, high-efficiency spacecraft, such as the Discovery and New Millennium spacecraft.

The Cassini orbiter advances and extends the technology base of the United States and its partners with several innovations in engineering and information systems. Whereas previous planetary spacecraft used onboard tape recorders to store data, Cassini has pioneered a new solid-state data recorder with no moving parts. The new recorder eventually will replace tape recorders on all space missions. NASA's Advanced X-ray Astrophysics Facility (AXAF), for example, will use a solid-state recorder from the production line established for the Cassini mission. In addition, the recorder has great potential for use in a variety of fields, from aerospace to the entertainment industry, and is expected to find wide applicability in consumer electronics.

Similarly, the main onboard computer that directs operations of the orbiter uses a novel design that draws on new families of electronic chips. Among them are very high-speed integrated circuit (VHSIC) chips developed under a U.S. government-industry research and development initiative. The Cassini application GVSC 1750A computer is the first civilian spacecraft application of this technology. The computer system also uses power new application-specific integrated circuit (ASIC) parts; each component replaces one hundred or more traditional chips. The ASIC chips allow the development of a data system for Cassini 10 times more efficient than earlier spacecraft designs, but at less than one-third the mass and volume. Two missions under NASA's Discovery program, Mars Pathfinder and the Near Earth Asteroid Rendezvous (NEAR), used these chips directly off the Cassini production line.

Elsewhere on the Cassini orbiter, the power system benefits from an innovative solid-state power switch developed for the mission. This switch eliminates rapid fluctuations called transients that usually occur with conventional power switches, with a significantly improved component lifetime. The power switch holds great promise for use in numerous Earth-based applications. A low mass, low power, radiation-hardened X-band radio transponder (a combined receiver and transmitter) was developed by the Cassini program. Both Mars Pathfinder and NEAR missions used radio transponders built on the Cassini mission's production line.

The inertial reference units to be used on Cassini represent the first space version of a revolutionary new gyro called the hemispherical resonator gyroscope. Gyros commonly used in spacecraft, aircraft and ships are large, very delicate mechanical devices whose many moving parts make them susceptible to failure. This new gyro, which eventually may be used on other spacecraft, promises greater reliability and less vulnerability to failure because it uses no mov-

ing parts. A slightly modified Cassini gyro was incorporated into the NEAR spacecraft.

Cassini Signature Disk

In August 1997, a small digital versatile disk (DVD) was installed aboard the Cassini spacecraft during processing at the Kennedy Space Center. The disk contains a record of 616,400 handwritten signatures from 81 countries around the globe. Signatures were received from people of all ages and backgrounds.

Mail came from individuals, families and, often, from entire schools of students. Signatures came from the very young, just learning to write, and from the very old, whose hands were no longer steady. Signatures were sent in behalf of loved ones who had died in the recent past. Even the signatures of Jean-Dominique Cassini and Christiaan Huygens were obtained from letters they wrote during the 17th century.

Sorting, counting and scanning the signatures was performed over the course of a year by volunteers from the Planetary Society, Pasadena, CA. The disk's cover, designed by Charles Kohlhase of the Cassini project, depicts a golden eagle wing feather and various Cassini mission elements to symbolize the signature experience. The feather was chosen to represent both the beauty and power of flight, as well as the quill pen that was used for nearly 14 centuries in writing and signing.

Science Objectives

Cassini's payload represents a carefully chosen set of interrelating instruments that will address many major scientific questions about the Saturn system. The data they return will be analyzed by a team of nearly 300 scientists from the United States and Europe. The Cassini and Huygens mission science objectives are as follows:

Saturn

❑ Determine the temperature field, cloud properties and composition of Saturn's atmosphere.

❑ Measure the planet's global wind field, including waves and eddies; make long-term observations of cloud features to see how they grow, evolve and dissipate.

❑ Determine the internal structure and rotation of the deep atmosphere.

❑ Study daily variations and relationship between the ionosphere and the planet's magnetic field.

❑ Determine the composition, heat flux and radiation environment present during Saturn's formation and evolution.

❑ Investigate sources and nature of Saturn's lightning.

Titan

❑ Determine the relative amounts of different components of the atmosphere; determine the mostly likely scenarios for the formation and evolution of Titan and its atmosphere.

❑ Observe vertical and horizontal distributions of trace gases; search for complex organic molecules; investigate energy sources for atmospheric chemistry; determine the effects of sunlight on chemicals in the stratosphere; study formation and composition of aerosols (particles suspended in the atmosphere).

❑ Measure winds and global temperatures; investigate cloud physics, general circulation and seasonal effects in Titan's atmosphere; search for lightning.

❑ Determine the physical state, topography and composition of Titan's surface; characterize its internal structure.

❑ Investigate Titan's upper atmosphere, its ionization and its role as a source of neutral and ionized material for the magnetosphere of Saturn.

Magnetosphere

❑ Determine the configuration of Saturn's magnetic field, which is nearly symmetrical with Saturn's rotational axis. Also study its relation to the modulation of Saturn kilometric radiation — a radio emission from Saturn that is believed to be linked to the way electrons in the solar wind interact with the magnetic field at Saturn's poles.

❑ Determine the current systems, composition, sources and concentrations of electrons and protons in the magnetosphere.

❑ Characterize the structure of the magnetosphere and its interactions with the solar wind, Saturn's moons and rings.

❑ Study how Titan interacts with the solar wind and with the ionized gases within Saturn's magnetosphere.

The Rings

❑ Study configuration of the rings and dynamic processes responsible for ring structure.

❑ Map the composition and size distribution of ring material.

❑ Investigate the interrelation of Saturn's rings and moons, including imbedded moons.

❑ Determine the distribution of dust and meteoroid distribution in the vicinity of the rings.

❑ Study the interactions between the rings and Saturn's magnetosphere, ionosphere and atmosphere.

Icy Moons

❑ Determine general characteristics and geological histories of Saturn's moons.

❑ Define the different physical processes that have created the surfaces, crusts or subsurfaces of the moons.

❑ Investigate compositions and distributions of surface materials, particularly dark, organic-rich materials and condensed ices with low melting points.

❑ Determine the bulk compositions and internal structures of the moons.

❑ Investigate interactions of the moons with Saturn's magnetosphere and ring system

and possible gas injections into the magnetosphere.

In addition to the science objectives at Saturn, the Cassini spacecraft will also conduct a gravity-wave investigation through the ASI-provided high-gain antenna during its interplanetary cruise.

Orbiter Science Instruments

The Cassini orbiter carries a total of 12 science instruments. Two pallets carry most of the instruments; four instruments are located on the remote sensing experiments pallet, and three are located on the fields and particles experiments pallet. Others are fixed at independent locations on the spacecraft. The experiments include:

❑ **Imaging Science Subsystem**, or Cassini's cameras, will photograph a wide variety of targets — Saturn, the rings, Titan and the icy moons — from a broad range of observing distances for various scientific purposes. General science objectives include studying the atmospheres of Saturn and Titan, the rings of Saturn and their interactions with the planet's moons and the surface characteristics of the moons, including Titan. The instrument includes both a narrow-angle and a wide-angle camera. The narrow-angle camera provides high-resolution images of targets of interest, while the wide-angle camera provides more extended spatial coverage at lower resolution. The cameras can also obtain optical navigation frames — images of Saturn's moons against a star background — which are used to keep the spacecraft on the correct trajectory. Team leader is Dr. Carolyn C. Porco of the University of Arizona, Tucson, AZ.

❑ **Visible and Infrared Mapping Spectrometer** will map the surface spatial distribution of the mineral and chemical features of a number of targets, including Saturn's rings, surfaces of the moons, and the atmospheres of Saturn and Titan. The instrument includes a pair of imaging grating spectrometers that are designed to measure reflected and emitted radiation from atmospheres, rings and surfaces to determine their compositions, temperatures and structures. A spectrometer is an optical instrument that splits the light received from objects into its component wavelengths; each chemical has a unique spectral signature and thus can be identified. The instrument obtains information over 352 contiguous wavelengths from 0.35 to 5.1 micrometers; it measures intensities of individual wavelengths and uses the data to infer the composition and other properties of the object that emitted the light. The mapping spectrometer provides images in which every pixel contains high-resolution spectra of the corresponding spot on the target body. Principal investigator is Dr. Robert H. Brown of the University of Arizona, Tucson, AZ.

❑ **Composite Infrared Spectrometer** will measure infrared emissions from atmospheres, rings and surfaces. This spectrometer will create vertical profiles of temperature and gas composition for the atmospheres of Titan and Saturn, from deep in their tropospheres (lower atmospheres), to high in their stratospheres (upper atmospheres). The instrument will also gather information on the thermal properties and composition of Saturn's rings and icy moons. The instrument is a coordinated set of three interferometers designed to measure infrared emissions over wavelengths from 7 to 1000 micrometers in the mid- and far-infrared range of the electromagnetic spectrum. Each interferometer uses a beam splitter to divide incoming infrared light

into two paths. The beam splitter reflects half of the energy toward a moving mirror and transmits half to a fixed mirror. The light is recombined at the detector. As the mirror moves, different wavelengths of light alternately cancel and reinforce each other at a rate that depends on their wavelengths. This information can be used to construct an infrared spectrum. Principal investigator is Virgil G. Kunde of NASA's Goddard Space Flight Center, Greenbelt, MD.

❑ **Ultraviolet Imaging Spectrograph** is a set of detectors designed to measure ultraviolet light reflected by or emitted from atmospheres, rings and surfaces to determine their compositions, distributions, aerosol content and temperatures. The instrument will also measure fluctuations of sunlight and starlight as the Sun and stars move behind the rings of Saturn and the atmospheres of Saturn and Titan, and will determine the atmospheric concentrations of hydrogen and deuterium. The instrument includes a two-channel, far- and extreme-ultraviolet imaging spectrograph that studies light over wavelengths from 55.8 to 190 nanometers. It also has a hydrogen deuterium absorption cell and a high-speed photometer. An imaging spectrograph records spectral intensity information in one or more wavelengths of light and then outputs digital data that can be displayed in a visual form, such as a false-color image. The hydrogen-deuterium absorption cell measures the quantity of deuterium, a heavier form of hydrogen. The high-speed photometer determines the radial structure of Saturn's rings by watching starlight through the rings. Principal investigator is Dr. Larry L. Esposito of the University of Colorado, Boulder, CO.

❑ **Cassini Radar** will investigate the surface of Saturn's largest moon, Titan. Titan's surface is covered by a thick, cloudy atmosphere that is hidden to normal optical view, but can be penetrated by radar. The instrument is based on the same imaging radar technology used in missions such as Magellan to Venus and the Earth-orbiting Spaceborne Imaging Radar. Scientists hope to determine if oceans exist on Titan and, if so, determine their distribution; investigate the geological features and topography of Titan's solid surface; and acquire data on other targets, such as Saturn's rings and icy moons, as conditions permit.

The radar will take four types of observations: *imaging, altimetry, backscatter* and *radiometry*. In *imaging* mode, the instrument will bounce pulses of microwave energy off the surface of Titan from different incidence angles and record the time it takes the pulses to return to the spacecraft. These measurements, converted to distances by dividing by the speed of light, will allow construction of visual images of the target surface with a resolution ranging from about one-fifth mile to one mile (one-third kilometer to 1.7 kilometers).

Radar *altimetry* similarly involves bouncing microwave pulses off the surface of the target body and measuring the time it takes the "echo" to return to the spacecraft. In this case, however, the goal will not be to create visual images but rather to obtain numerical data on the precise altitude of surface features. The altimeter resolution is about 14 to 16 miles horizontally, 297 to 495 feet vertically (24 to 27 kilometers horizontally, 90 to 150 meters vertically).

In *backscatter mode*, the radar bounces pulses off Titan's surface and measures the intensity of the energy returning. This returning energy, or backscatter, is always less than the original pulse, because surface features inevitably reflect the pulse in more than one direction.

From the backscatter measurements, scientists can draw conclusions about the composition and roughness of the surface.

In *radiometry* mode, the radar will operate as a passive instrument, simply recording the heat energy emanating from the surface of Titan. This information can be used to determine the amount of moisture (such as vapors of methane) in Titan's atmosphere, a factor that has an impact on the precision of the other measurements taken by the instrument.

At altitudes between about 14,000 and 5,600 miles (22,500 to 9,000 kilometers), the radar will switch between scatterometry and radiometry to obtain low-resolution global maps of Titan's surface roughness, backscatter intensity and thermal emissions. At altitudes between about 5,600 and 2,500 miles (9,000 to 4,000 kilometers), the instrument will switch between altimetry and radiometry, collecting surface altitude and thermal emission measurements. Below about 2,500 miles (4,000 kilometers), the radar will switch between imaging and radiometry. Team leader is Dr. Charles Elachi of NASA's Jet Propulsion Laboratory, California Institute of Technology, Pasadena, CA.

❑ **Radio Science** will use the spacecraft's radio and the ground antennas of NASA's Deep Space Network to study the composition, pressures and temperatures of the atmospheres and ionospheres of Saturn and Titan; the radial structure of and particle size distribution in Saturn's rings; and the masses of objects in the Saturn system and the mass of Saturn's ring system as a whole. Radio science will also be used to search for gravitational waves coming from beyond our solar system. Some of these experiments measure Doppler shifts (frequency shifts) and other changes to radio signals that occur when the spacecraft passes behind planets, moons, atmospheres or physical features such as planetary rings. From these measurements, scientists can derive information about the structures and compositions of the occulting bodies, atmospheres and the rings. Team leader is Dr. Arvydas J. Kliore of NASA's Jet Propulsion Laboratory, California Institute of Technology, Pasadena, CA.

❑ **Cassini Plasma Spectrometer** will measure the composition, density, flow velocity and temperature of ions and electrons in Saturn's magnetosphere. The instrument consists of three sensors: an electron spectrometer, an ion beam spectrometer and an ion mass spectrometer. A motor-driven actuator rotates the sensor package to provide 208-degree scanning in the azimuth of the Cassini orbiter. The electron spectrometer makes measurements of the energy of incoming electrons; its energy range is 0.7 to 30,000 electronvolts. The ion beam spectrometer determines the energy to charge ratio of an ion; its energy range is 1 electronvolt to 50 kiloelectronvolts. The ion mass spectrometer's energy range is 1 electronvolt to 50 kiloelectronvolts. Principal investigator is Dr. David T. Young of the Southwest Research Institute, San Antonio, TX.

❑ **Ion and Neutral Mass Spectrometer** will determine the composition and structure of positive ion and neutral particles in the upper atmosphere of Titan and the magnetosphere of Saturn, and will measure the positive ion and neutral environments of Saturn's icy moons and rings. The instrument will determine the chemical, elemental and isotopic composition of the gaseous and volatile components of the neutral particles and the low energy ions in Titan's

atmosphere and ionosphere, Saturn's magnetosphere and the ring environment. Team leader is Dr. J. Hunter Waite of the Southwest Research Institute, San Antonio, TX.

❑ **Cosmic Dust Analyzer** will provide direct observations of small ice or dust particles in the Saturn system in order to investigate their physical, chemical and dynamic properties and study their interactions with the rings, icy moons and magnetosphere of Saturn. The instrument measures the amount, velocity, charge, mass and composition of tiny dust and ice particles. It has two types of sensors — high-rate detectors and a dust analyzer. The two high-rate detectors, intended primarily for measurements in Saturn's rings, count impacts up to 10,000 per second. The dust analyzer determines the electric charge carried by dust particles, the flight direction and impact speed, mass and chemical composition, at rates up to 1 particle per second, and for speeds of up to about 60 miles per second (1-100 kilometers per second). An articulation mechanism allows the entire instrument to be rotated or repositioned relative to the body of the Cassini orbiter. Principal investigator is Dr. Eberhard Grün of the Max Planck Institute für Kernphysik, Heidelberg, Germany.

❑ **Dual Technique Magnetometer** will determine the magnetic fields of the planet and moons and study dynamic interactions between different magnetic fields in the planetary environment. The instrument consists of direct-sensing instruments that detect and measure the strength of magnetic fields in the vicinity of the spacecraft. The experiment includes both a flux gate magnetometer and a vector/scalar helium magnetometer. They are used to measure the magnitude and direction of magnetic fields. Since magnetometers are sensitive to electric currents and ferrous components, they are generally placed on an extended boom, as far from the spacecraft as possible. On Cassini, the flux gate magnetometer is located midway out on the 36-foot (11-meter) magnetometer boom, and the vector/scalar helium magnetometer is located at the end of the boom. The boom itself, composed of thin, nonmetallic rods, is folded during launch and deployed about two years after launch. The magnetometer electronics are in a bay in the Cassini orbiter's spacecraft body. Principal investigator is Dr. David J. Southwood of the Imperial College of Science & Technology, London, England.

❑ **Magnetospheric Imaging Mass Spectrometer** is designed to measure the composition, charge state and energy distribution of energetic ions and electrons; detect fast neutral particles; and conduct remote imaging of Saturn's magnetosphere. It is the first instrument ever designed to produce an image of a planetary magnetosphere. This information will be used to study the overall configuration and dynamics of the magnetosphere and its interactions with the solar wind, Saturn's atmosphere, Titan, rings and the icy moons. The instrument will provide images of the ionized gases, called plasma, surrounding Saturn and determine the charge and composition of ions. Like the Cassini plasma spectrometer, this instrument has three sensors that perform various measurements: the low-energy magnetospheric measurement system, the charge-energy-mass spectrometer and the ion and neutral camera. The low-energy magnetospheric measurement system will measure low- and high-energy proton, ion and electron angular distributions (the number of particles coming from each direction). The charge-energy-mass spectrometer uses an electrostatic analyzer, a time-of-flight mass spectrometer and microchannel plate detectors to measure the charge and composition of ions. The third sensor, the ion and neutral camera, makes two different types of measurements. It will obtain three-dimensional

distributions, velocities and the rough composition of magnetospheric and interplanetary ions. Principal investigator is Dr. Stamatios M. Krimigis of Johns Hopkins University, Baltimore, MD.

❑ **Radio and Plasma Wave Science** instrument will measure electrical and magnetic fields in the plasma of the interplanetary medium and Saturn's magnetosphere, as well as electron density and temperature. Plasma is essentially a soup of free electrons and positively charged ions, the latter being atoms that have lost one or more electrons. Plasma makes up most of the universe and is created by the heating of gases by stars and other bodies in space. Plasma is distributed by the solar wind; it is also "contained" by magnetic fields (that is, the magnetospheres) of bodies such as Saturn and Titan. The major components of the instrument are an electric field sensor, a magnetic search coil assembly and a Langmuir probe. The electric field sensor is made up of three deployable antenna elements mounted on the upper equipment module of the Cassini orbiter. Each element is a collapsible beryllium-copper tube that is rolled up during launch and subsequently unrolled to its approximately 33-foot (10-meter) length by a motor drive. The magnetic search coils are mounted on a small platform attached to a support for Cassini's high-gain antenna. The Langmuir probe, which measures electron density and temperature, is a metallic sphere about 2 inches (50 millimeters) in diameter. The probe is attached to the same platform by an approximately 3-foot (1-meter) deployable boom. Principal investigator is Dr. Donald A. Gurnett of the University of Iowa, Iowa City, IA.

Huygens Probe Instruments

The Huygens descent probe contains a total of six science instruments. They are:

❑ **Descent Imager/Spectral Radiometer** uses 13 fields of view, operating at wavelengths of 350 to 1700 nanometers, to obtain a variety of imaging and spectral observations. Infrared and visible imagers will observe Titan's surface during the latter stages of the descent. Using the Huygens probe's rotation, the imagers will build a mosaic of pictures around the landing site. A side-looking visible imager will view the horizon and the underside of any cloud deck. The spectral radiometer will measure concentrations of argon and methane in the atmosphere. It also will determine if the local surface is solid or liquid, and, if solid, its topography. Solar aureole sensors will measure the light intensity around the Sun resulting from scattering by particles suspended in the atmosphere, permitting calculations of their size, number and density. Principal investigator is Dr. Martin G. Tomasko of the University of Arizona, Tucson, AZ.

❑ **Huygens Atmospheric Structure Instrument** investigates the physical properties of Titan's atmosphere, including temperature, pressure and atmospheric density as a function of altitude, wind gusts and, in the event of a landing on a liquid surface, wave motion. Comprising a variety of sensors, the instrument will also measure the ion and electron conductivity of the atmosphere and search for electromagnetic wave activity. On Titan's surface, the instrument will be able to measure the conductivity of surface material. The instrument also processes the signal from the Huygens probe's radar altimeter to obtain information on surface topography, roughness and electrical properties. Principal investigator is Dr. Marcello Fulchignoni of the Paris Observatory, Meudon, France.

❑ **Aerosol Collector and Pyrolyzer** traps particles suspended in Titan's atmosphere using a deployable sampling device. Samples are heated in ovens to vaporize the ice particles and decompose the complex organic materials into their component chemicals. The products are then passed to the gas chromatograph/mass spectrometer for analysis. The instrument will obtain samples at two altitude ranges. The first sample will be taken at altitudes down to about 19 miles (30 kilometers) above the surface. The second sample will be obtained at an altitude of about 12 miles (about 20 kilometers). Principal investigator is Dr. Guy M. Israel of the Service d'Aeronomie du Centre National de la Recherche Scientifique, Verrieres-le-Buisson, France.

❑ **Gas Chromatograph/Mass Spectrometer** provides a quantitative analysis of Titan's atmosphere. Atmospheric samples are transferred into the instrument by dynamic pressure as the Huygens probe descends through the atmosphere. The mass spectrometer constructs a spectrum of the molecular masses of the gas driven into the instrument. Just before landing, the instrument's inlet port is heated to vaporize material on contact with the surface. Following a safe landing, the instrument can determine Titan's surface composition. The mass spectrometer serves as the detector for the gas chromatograph, for unseparated atmospheric samples and for samples provided by the aerosol collector and pyrolyzer. Portions of the instrument are identical in design to the Cassini orbiter's ion and neutral mass spectrometer. Principal investigator is Dr. Hasso B. Neimann of NASA's Goddard Space Flight Center, Greenbelt, MD.

❑ **Doppler Wind Experiment** uses two ultrastable oscillators, one on the Huygens probe and one on the Cassini orbiter, to give Huygens' radio relay link a stable carrier frequency. Orbiter measurements of changes in probe frequency caused by Doppler shift will provide information on the probe's motion. In turn, scientists will be able to derive a height profile of the zonal wind (the component of wind along the line of sight) and its turbulence. Principal investigator is Dr. Michael K. Bird of the University of Bonn, Germany.

❑ **Surface Science Package** contains a number of sensors to determine the physical properties and composition of Titan's surface. An acoustic sounder measures the rate of descent, surface roughness and the speed of sound in any liquid. During descent, measurements of the speed of sound will give information on atmospheric composition and temperature. An accelerometer records the deceleration profile at impact, indicating the hardness of the surface. Tilt sensors (liquid-filled tubes with electrodes) measure any pendulum motion of the Huygens probe during descent, indicate the Huygens probe orientation after landing and measure any wave motion. If the surface is liquid, other sensors measure its density, temperature, refractive index, thermal conductivity, heat capacity and electrical properties. A group of platinum resistance wires, through two of which a heating current can be passed, will measure temperature and thermal conductivity of the surface and lower atmosphere and the heat capacity of the surface material. If the probe lands in liquid, a transducer, pointed downward and operating at 15 kilohertz, will conduct an acoustic sounding of the liquid's depth. The instrument will also provide some crude topographic mapping of the surface as the probe descends the last few yards (or meters) through the atmosphere. Principal investigator is Dr. John C. Zarnecki of the University of Kent, England.

Cassini's Nuclear Safety

The Cassini spacecraft derives its electrical power from radioisotope thermoelectric generators (RTGs), lightweight, compact spacecraft power systems that are extraordinarily reliable. RTGs are not nuclear reactors and have no moving parts. They use neither fission nor fusion processes to produce energy. Instead, they provide power through the natural radioactive decay of plutonium (mostly Pu-238, a non-weapons-grade isotope). The heat generated by this natural process is changed into electricity by solid-state thermoelectric converters.

RTGs enable spacecraft to operate at significant distances from the Sun or in other areas where solar power systems would not be feasible. They remain unmatched for power output, reliability and durability by any other power source for missions to the outer solar system.

The United States has an outstanding record of safety in using RTGs on 23 missions over the past 30 years. While RTGs have never caused a spacecraft failure on any of these missions, they have been onboard three missions which experienced malfunctions for other reasons. In all cases, the RTGs performed as designed.

More than three decades have been invested in the engineering, safety analysis and testing of RTGs. Safety features are incorporated into the RTG design, and extensive testing has demonstrated that they can withstand physical conditions more severe than those expected from most accidents.

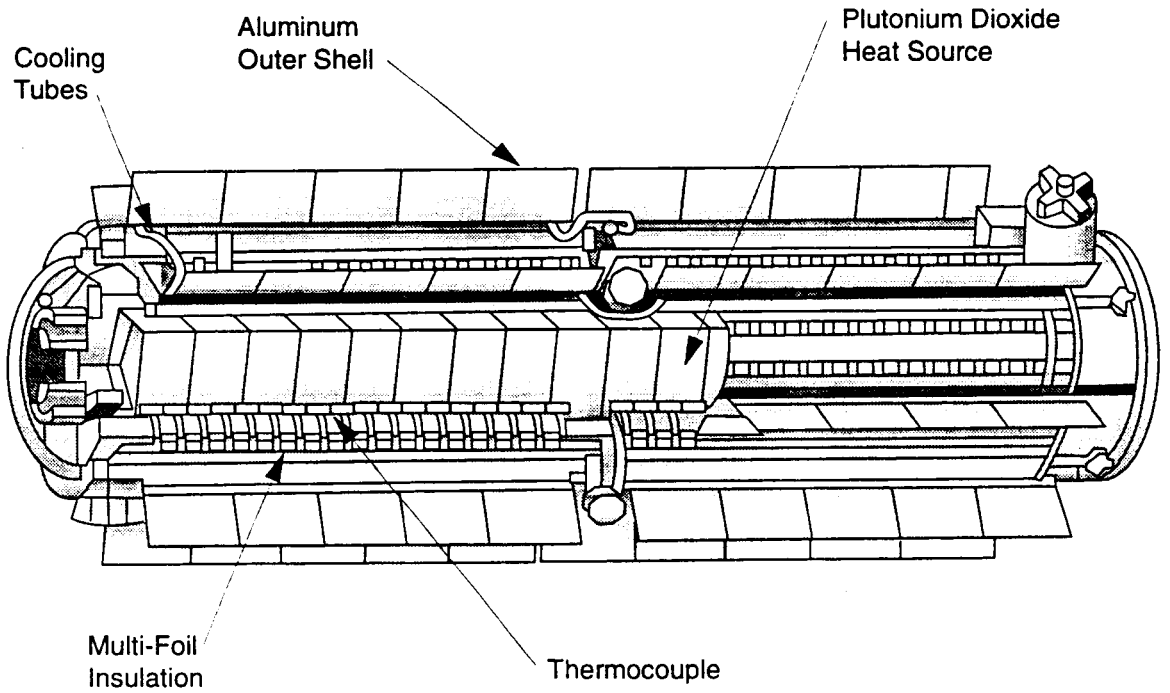

Radioisotope thermoelectric generator (RTG)

First, the fuel is in the heat-resistant, ceramic form of plutonium dioxide, which reduces its chance of vaporizing in fire or reentry environments. This ceramic-form fuel is also highly insoluble, has a low chemical reactivity, and primarily fractures into large, non-respirable particles and chunks. These characteristics help to mitigate the potential health effects from accidents involving the release of this fuel.

Second, the fuel in each RTG is divided among 18 small, independent modular units, each with its own heat shield and impact shell. This design reduces the chances of fuel release in an accident because all modules would not be equally impacted in an accident.

Third, multiple layers of protective materials, including iridium capsules and high-strength graphite blocks, are used to protect the fuel and prevent its accidental release. Iridium metal has a very high melting point and is strong, corrosion-resistant and chemically compatible with plutonium dioxide. These characteristics make iridium useful for protecting and containing each fuel pellet. Graphite is used because it is lightweight and highly heat-resistant.

Potential RTG accidents are sometimes mistakenly equated with accidents at nuclear power plants. It is completely inaccurate to associate an RTG accident with Chernobyl or any other past radiation accident involving nuclear fission. RTGs do not use either a fusion or fission process, and could never explode like a nuclear bomb under any accident scenario. Neither could an accident involving an RTG create the kind of radiation sickness associated with nuclear explosions.

NASA and the Department of Energy, the producer of the RTGs, place the highest priority on assuring the safe use of plutonium in space. Thorough and detailed safety analyses are conducted before launching spacecraft with RTGs, and many prudent steps are taken to reduce the risks involved in missions using RTGs. In addition to NASA's internal safety requirements and reviews, NASA missions that carry nuclear material also undergo an extensive external safety review involving detailed testing and analysis. Further, an independent safety evaluation of the Cassini mission has been performed as part of the nuclear launch safety approval process by an Interagency Nuclear Safety Review Panel (INSRP), which is supported by experts from government, industry and academia.

Alternatives

Studies conducted by NASA's Jet Propulsion Laboratory (JPL) have concluded that neither fuel cells nor spacecraft batteries demonstrate the operational life needed for planetary missions, whose duration can exceed 10 years from launch. In addition, the large mass of batteries that would be needed to power a mission such as Cassini exceeds current launch vehicle lift capabilities.

JPL's rigorous analysis has also taken into account the advances in solar power technologies that have occurred over the last decade. The conclusion reached by JPL researchers is that solar technology is still not capable of providing sufficient and reliable electrical power for the Cassini mission. The mass of solar arrays required would make the spacecraft too heavy for

available launch vehicles. Even if a sufficiently powerful launch vehicle were available for an all-solar Cassini, other limitations exist with current and near-term solar technologies.

The behavior of solar cells at vast distances from the Sun is not well understood and would add significant risk to the success of a solar-powered mission to Saturn. Saturn is located approximately 882 million miles (1.42 billion kilometers) from the Sun, nearly twice as far from the Sun as Jupiter, the next closest planet.

The size of solar arrays that would be needed, about the size of two tennis courts, would not only be difficult to deploy reliably, but would make turns and other critical maneuvers extraordinarily difficult to perform. This would severely inhibit Cassini's ability to achieve its science objectives.

The large arrays would seriously interfere with the fields of view of many of the science experiments and navigation sensors, further limiting the Cassini mission's ability to achieve the science objectives.

Large arrays could generate serious electromagnetic and electrostatic interference, which would adversely impact the operation of the science experiments and the Cassini spacecraft's communications equipment and computers.

Cassini's Earth Swingby

By aiming a spacecraft so that it passes close to a planet or moon, it is possible to boost the spacecraft on to still more distant destinations with greater velocity. This gravity-assist maneuver has become an established method of launching massive, instrument-laden spacecraft to the outer planets. Cassini will make use of this technique when it swings by Venus twice, then the Earth and Jupiter to reach its ultimate destination of Saturn.

The Earth swingby does not represent a substantial risk to Earth's population because the probability of a reentry during the maneuver is extremely low, less than one in one million. NASA's robotic planetary spacecraft have performed numerous similar maneuvers with extraordinary precision. The redundant design of Cassini's systems and navigational capability allows control of the swingby altitude at Earth to within an accuracy of 2 to 3 miles (3 to 5 kilometers) at an altitude of 500 miles (800 kilometers) or higher.

In addition, NASA has taken specific actions to design the spacecraft and mission in such a way as to ensure the probability of Earth impact is less than one in one million. For example, until seven days before the Earth swingby, the spacecraft is on a trajectory that, without any further maneuvers, would miss the Earth by thousands of kilometers. This trajectory strictly limits the possibility that random external events, such as a micrometeoroid puncture of a spacecraft propellant tank, might lead to Earth impact.

Radiation Hazards of Plutonium-238

Plutonium-238 gives off short-range alpha particles, helium nuclei that usually travel no more than about three inches in air. While the fuel is contained within its iridium capsule, the alpha radiation does not present a hazard, and the external dose resulting from the low levels of gamma and neutron radiation associated with the plutonium dioxide RTG fuel generally do not represent a significant health hazard. External alpha radiation would be stopped by clothing, an outer layer of unbroken skin, or even a sheet of paper. The point at which Pu-238 can become a health hazard is when it is deposited into the body in tiny particle form and becomes lodged there.

If an individual were to inhale plutonium dioxide particles of a sufficiently small size to be deposited and retained in proximity to lung tissue, the alpha radiation could lead to forms of cancer. The ceramic form of plutonium used in RTGs, however, is made to inhibit the fuel from shattering into fine particles that could be readily inhaled.

The ceramic form of plutonium dioxide fuel also has low solubility in water, so it has little potential to migrate in groundwater or be taken up by plants. Plutonium dioxide also is highly insoluble in the human digestive system.

A common misconception is that a small amount of plutonium, such as one pound, if evenly distributed over the entire world, could induce lung cancer in every person on Earth. While plutonium can alter or kill living cells if deposited directly onto sensitive human tissue, the important point is that it must be in a form that enables environmental transport and intake by humans. Research has demonstrated that the mechanisms of plutonium dispersion into and transport through the environment, and hence into humans, are extremely difficult and inefficient.

Even in the highly unlikely release of plutonium dioxide from Cassini's RTGs in the event of an accident, independently reviewed analysis shows that the radiation hazard to the average exposed individual would be minuscule, about 1/15,000 of the lifetime exposure a person receives from natural radiation sources.

The International Team

The Cassini program is an international cooperative effort involving NASA, the European Space Agency (ESA) and the Italian Space Agency, Agenzia Spaziale Italiana (ASI), as well as several separate European academic and industrial contributors. The Cassini partnership represents an undertaking whose scope and cost would not likely be borne by any single nation, but it made possible through shared investment and participation. Hundreds of scientists and engineers from 16 European countries and 33 U.S. states make up team that developed and will fly and receive data from Cassini and Huygens.

In the United States, the mission is managed for NASA's Office of Space Science by the Jet Propulsion Laboratory (JPL), Pasadena, CA. JPL is a division of the California Institute of Technology. At JPL, Richard J. Spehalski is the Cassini program manager, and Ronald F. Draper is the deputy program manager. Dr. Dennis L. Matson is the Cassini project scientist and Dr. Linda J. Spilker is the deputy project scientist. Thomas R. Gavin is spacecraft system manager, William G. Fawcett is science instruments manager, Charles E. Kohlhase is science and mission design manager, and Peter E. Doms is mission and science operations manager.

At NASA Headquarters, Mark Dahl is Cassini program executive and Henry C. Brinton is Cassini program scientist.

The major U.S. contractor is Lockheed Martin, whose contributions include the launch vehicle and upper stage, spacecraft propulsion module and the radioisotope thermoelectric generators.

Development of the Huygens Titan probe is managed by the European Space Technology and Research Center (ESTEC). ESTEC's prime contractor, Aerospatiale in Toulouse, France, assembled the probe with equipment supplied by many European countries. Huygens' batteries and two scientific instruments came from the United States. At ESA, Hamid Hassan is Huygens project manager, and Dr. Jean-Pierre Lebreton is project scientist.

At ASI, Enrico Flameni is the project manager for Cassini's radio antenna and other contributions to the spacecraft.

The U.S. Department of Energy provided Cassini's radioisotope thermoelectric generators. Beverly Cook is program manager for radioisotope power systems at DOE's Office of Space Power Systems, Germantown, MD.

The U.S. Air Force provided the Titan IV/Centaur launch vehicle. Launch operations are managed by the 45th Space Wing, Cape Canaveral, FL, under the command of Brig. Gen. Randy Starbuck.

9-1-97 HQ

NewsRelease

National Aeronautics and
Space Administration

Washington, D.C. 20546
(202) 358-1600

For Release

Michael Braukus
Headquarters, Washington, DC
(Phone: 202/358-1778)

October 1, 1997

James Hartsfield
Johnson Space Center, Houston, TX
(Phone: 281/483-5111)

RELEASE: 97-222

CONTROL BOARD REPORTS INTERNATIONAL SPACE STATION LAUNCH ON TARGET, FINALIZES ASSEMBLY SEQUENCE

With the first launch nine months away, representatives of the 15 nations building the International Space Station gathered in Houston this week to finalize the station's assembly sequence and confirm that construction remains on target.

"All of the partners reported they were on schedule with their contributions to the station," International Space Station Program Manager Randy Brinkley said. "The first elements, the Functional Cargo Block and the U.S. Node 1, remain on track for launches next year. In September, during a General Designer's Review for the third element, the Russian Service Module, we were reassured by the Russian Space Agency that they can meet the scheduled launch date of December 1998."

The latest assembly sequence approved by the board maintains a launch of the European Space Agency's Columbus Orbital Facility in October 2002 and establishes the launch of a third connecting module, called Node 3, to the station. The Revision C Assembly Sequence had been approved in preliminary form during a May board meeting. The last 15 flights of the 45-flight sequence remained under review following the May meeting, pending further evaluation of launch date options for the Columbus module.

The Service Module, the first fully Russian contribution to the station, completed a critical milestone Sept. 12 when the general designer's review was held in Moscow. Under construction at the Khrunichev State Research and Production Space Center in Moscow, the module has progressed rapidly this summer. It remains on target for the December 1998 launch from the Baikonur Cosmodrome in Kazahkstan.

-more-

Manufacturing of the module will be completed at Khrunichev in November and it will be moved to Rocket Space Corporation-Energia (RSC-Energia) facilities to begin final testing. Another general designer's review is scheduled for January 1998, and the module will be shipped to Baikonur to begin launch preparations in late May 1998.

The first station element, the U.S.-funded, Russian-built Functional Cargo Block, is on track for a launch in June 1998. Modifications to the module begun earlier this year have been completed that will allow it to be refueled and to accomodate Soyuz dockings. It completed manufacturing at Khrunichev Sept. 15 and was moved to the RSC-Energia facilities where it is undergoing final testing. In January 1998, it will be shipped to Baikonur.

The first U.S.-built station element, Node 1, was shipped from its Alabama factory to the Kennedy Space Center, FL, in June to begin preparations for launch on the first Space Shuttle assembly mission, STS-88, set for July 1998. The second of two conical-shaped pressurized mating adapters that will be attached to either end of the node is being shipped from its California factory to Kennedy this week.

"With the Node and pressurized mating adapters now at Kennedy for launch processing and the FGB ahead of schedule for its shipment to Baikonur, it's a busy and exciting time as we prepare for the launch and assembly phase," Brinkley said.

During the next nine months leading to the start of the International Space Station's five-year, 45-flight orbital assembly sequence, the first truss structure, a third mating adapter and the first solar arrays, batteries and radiators for the station will be shipped from factories nationwide to Florida to be readied for launches in early 1999. Less than a year from now, in August 1998, the first station laboratory, the U.S. Laboratory Module, will be shipped from a Huntsville, AL, factory to Kennedy to begin final testing and launch preparations.

-end-

Video and still photography of the first International Space Station elements under construction in Moscow and being prepared for launch at the Kennedy Space Center is available to illustrate this release, as well as animation of the station and its assembly, from the Johnson Space Center Media Resource Center at 281/483-4231. Still photography, this news release, an updated International Space Station Revision C Assembly Sequence fact sheet, and further background on the International Space Station are available on NASA's Station Web at URL: http://station.nasa.gov.

Video Advisory

National Aeronautics and
Space Administration
Washington, DC 20546
(202) 358-1600

For Release
October 2, 1997

Renee Juhans
Headquarters, Washington, DC
(Phone: 202/358-1712)

VIDEO ADVISORY: V97-98

WRINKLES ON MARS

Today's video file features animation of data gathered by NASA's Mars Global Surveyor. NASA scientists have discovered new wrinkles in a magnetic field around Mars. These measurements were taken during the aerobraking phase of the mission which gave scientists an even better view of these fields.

ITEM 1: MARS GLOBAL SURVEYOR--SURFACE
Animation of small magnetic fields near the surface of Mars.

ITEM 1a: MARS GLOBAL SURVEYOR--EARTH-LIKE FIELD
Animation of an Earth-like field around the entire planet as described in the 9/17/97 release.

ITEM 1b: REPLAY- MARS GLOBAL SURVEYOR--BRAKING IN ORBIT

For more information contact Doug Isbell at (202) 358-1753 or Wade Sisler (301) 286-6256.

Video news file today at noon with replays during STS-86 Flight Day Highlights, scheduled every hour on the hour during the crew sleep cycle.

NASA Television is available on GE-2, transponder 9C at 85 degrees West longitude, with vertical polarization. Frequency is on 3880.0 megahertz, with audio on 6.8 megahertz.

-end-

NewsRelease

National Aeronautics and
Space Administration

Washington, D.C. 20546
(202) 358-1600

For Release

Don Nolan-Proxmire
Headquarters, Washington, DC
(Phone: 202/358-1983)

October 3, 1997

Jerry Berg
Marshall Space Flight Center, Huntsville, AL
(Phone: 205/544-5011)

RELEASE: 97-224

SPACE RESEARCH PROVIDES EARTHSHAKING REVELATIONS

Research aboard the Space Shuttle is helping to provide a way to protect structures from major vibrations such as those produced by severe earthquakes and high winds.

Dr. Mark S. Whorton, an aerospace engineer at NASA's Marshall Space Flight Center, Huntsville, AL, has been working for several years on resolving vibration problems in a microgravity environment that can affect sensitive science experiments conducted aboard the Shuttle in orbit.

"Movements of the Shuttle, such as attitude corrections and the activities of the crew members aboard the vehicle, create vibrations that can affect delicate experiments being conducted on board," he said. "Solutions to reducing these minor vibrations in space also can be applied to reducing the effect of major vibrations produced by earthquakes and high winds on terrestrial structures such as buildings and bridges."

Whorton has been conducting his research as part of his doctoral studies program under Dr. Anthony J. Calise in the School of Aerospace Engineering at the Georgia Institute of Technology in Atlanta. The research is part of a larger National Science Foundation effort to understand dynamic loads placed on structures by earthquakes and to identify ways of reducing their effect. The Georgia Tech research team for the past eight years has been studying the benefits of using passive and active control strategies to reduce the effects of earthquakes on buildings.

"Technologies we've developed here at Marshall to protect experiments such as those involving crystal growth aboard the Space Shuttle are directly applicable to buildings and bridges during seismic events. Right now we're working on developing technological 'tools' which architects and construction engineers can use when designing

-more-

more earthquake-tolerant structures and in enabling existing structures to better survive earthquakes," Whorton said.

The National Science Foundation, under its program on Earthquake Hazards Mitigation in the Civil and Mechanical Systems Division, is funding a major research program on structural control. Under this effort, the Georgia Institute of Technology and other universities are involved in various aspects of earthquake engineering such as developing better building materials, passive damping methods, and active vibration control. Research activities at Marshall are focused in the area of active vibration control.

There are several ways to reduce the effect of structural vibrations. A direct approach is to stiffen the structure, which requires changing its mass and therefore its vibration characteristics. While this may be acceptable for many terrestrial applications, the need for strong but lightweight structures in space renders this option infeasible for NASA.

"Clearly, for applications in the space program, lightweight but equally effective vibration-mitigating alternatives were needed. We found that these technologies had down-to-Earth applications as well. One way of countering structural vibrations caused by a strong gust of wind or seismic ground motion is to place sensors and force producing devices called actuators at specific locations on buildings. As sensors in the system measure the motion of the structure, actuators apply forces to counteract the structure's vibrations," Whorton said.

"One such force device would use hydraulic pistons moving counterweights. Another method involves placing adjustable tendons along the sides of structures. In fractions of a second, sensors in the systems can read the structural vibration patterns caused by earthquakes or high winds and adjust the tension on the appropriate tendons to reduce the excessive forces or motions of the building," Whorton said.

All the actively controlled buildings in operation today are in Japan with the exception of one in Taiwan. A TV tower in Nanjing, China, also is to be retrofitted with active vibration control. Other new construction will incorporate the technology, particularly in seismically active regions; and it may be possible to retrofit the technology to other existing structures.

"This technology -- in part derived from the nation's space program -- is being adapted to meet the needs of the construction industry around the globe," Whorton said. "The active control technology for vibration isolation is mature and is fully capable of doing the job. This is a technology ready now for commercial applications."

-end-

News Release

National Aeronautics and
Space Administration

Washington, DC 20546
(202) 358-1600

For Release

Douglas Isbell/Don Savage
Headquarters, Washington, DC
(Phone: 202/358-1547)

October 3, 1997

Matthew Donoghue
Department of Energy, Washington, DC
(Phone: 202/586-0619)

RELEASE: 97-225

NASA RECEIVES APPROVAL TO LAUNCH CASSINI MISSION

NASA today received formal approval from the White House Office of Science and Technology Policy (OSTP) to proceed toward the launch of the robotic Cassini mission to explore Saturn and its moon Titan.

"NASA and its interagency partners have done an extremely thorough job of evaluating and documenting the safety of the Cassini mission. I have carefully reviewed these assessments and have concluded that the important benefits of this scientific mission outweigh the potential risks," said OSTP Director Dr. John H. Gibbons, who signed the launch approval.

NASA Administrator Daniel S. Goldin said, "I am confident in the safety of the Cassini mission, and I fully expect that it will return spectacular images and scientific data about Saturn, in the same safe and successful manner as the Voyager, Galileo and Ulysses missions."

White House launch approval is required by presidential directive due to the type of power source used to provide electrical power for the Cassini spacecraft and its scientific instruments, and the heater units that it carries to keep the spacecraft's instruments and electronics warm in deep space.

The Radioisotope Thermoelectric Generators (RTGs) and Radioisotope Heater Units used to power Cassini and keep its internal systems warm have been used in previous NASA missions ranging from Apollo to Galileo, and have been approved by five previous administrations ranging from Nixon to Bush. RTGs produce power by the heat generated through the natural radioactive decay of non-weapons grade plutonium dioxide, which is transformed into electricity by solid-state thermoelectric converters.

- more -

Before Administrator Goldin sent the request for launch approval to OSTP, two separate processes were completed to address the environmental and safety aspects of the mission. NASA completed an Environmental Impact Statement in June 1995 and a supplement in June 1997, as required by the National Environmental Policy Act and NASA policy.

Consistent with long-standing Presidential policy, the Department of Energy (DOE) prepared over the past seven years a comprehensive Safety Analysis Report. In addition, an Interagency Nuclear Safety Review Panel, including safety experts from DOE, NASA, the Department of Defense (DOD), the Environmental Protection Agency (EPA), and a technical advisor from the Nuclear Regulatory Commission conducted a comprehensive evaluation of the safety analysis. This panel was supported by over 50 scientific experts from academia and industry.

DOD, EPA and DOE have written to the NASA Administrator confirming that, in their view, the safety analysis conducted for the mission is comprehensive and thorough.

Cassini is a cooperative endeavor of NASA, the European Space Agency (ESA) and the Italian Space Agency, or Agenzia Spaziale Italiana. The mission will send a sophisticated robotic spacecraft, equipped with 12 scientific experiments, to orbit Saturn for a four-year period and study the Saturnian system in detail. The ESA-built Huygens probe that will parachute into Titan's thick atmosphere carries another six scientific instrument packages.

Saturn is the second-largest planet in the solar system and is made up mostly of hydrogen and helium. Its placid-looking, butterscotch-colored face masks a windswept atmosphere where jet streams blow at 1,100 miles per hour and swirling storms roil just beneath the cloud tops. Previous spacecraft passing by Saturn found a huge and complex magnetic environment, called a magnetosphere, where trapped protons and electrons interact with each other, the planet, rings and surfaces of many of the moons.

Although it is believed to be too cold to support life, haze-covered Titan is thought to hold clues to how a primitive Earth evolved into a life-bearing planet. It has an Earth-like, nitrogen-based atmosphere and a surface that many scientists believe probably features chilled lakes of ethane and methane. Scientists believe that Titan's surface is probably coated with the residue of a sticky brown organic rain.

The launch of Cassini aboard a Titan IV-B/Centaur launch vehicle is scheduled for 4:55 a.m. EDT on October 13 from Cape Canaveral Air Station, FL. An on-time launch will deliver the Cassini mission to Saturn almost seven years later on July 1, 2004. Cassini's primary mission concludes in July 2008.

-end-

Video Advisory

National Aeronautics and
Space Administration

Washington, DC 20546
(202) 358-1600

For Release
Oct. 6, 1997

Renee Juhans
Headquarters, Washington, DC
(Phone: 202/358-1712)

VIDEO ADVISORY: V97-99

KIDSAT SNAPS SUMATRA

Today's video file features images of Sumatra, Indonesia, taken by students around the world on September 27, 1997, using the KidSat camera aboard the Space Shuttle Atlantis. These images illustrate the enormous ecological impact of the fires burning in the rain forests of the island. More information on the KidSat program is available on the World Wide Web site:

http://www.jpl.nasa.gov/kidsat

ITEM 1: KIDSAT SNAPS SUMATRA
Images of the fires.

For more information contact Stephanie Zeluck at (818) 354-5011.

Video news file today at noon, 3, 6, 9 p.m. and midnight EDT.

NASA Television is available on GE-2, transponder 9C at 85 degrees West longitude, with vertical polarization. Frequency is on 3880.0 megahertz, with audio on 6.8 megahertz.

-end-

News Release

National Aeronautics and
Space Administration

Washington, D.C. 20546
(202) 358-1600

For Release

Donald Nolan
Headquarters, Washington, DC
(Phone: 202/358-1983)

October 8, 1997

RELEASE: 97-226

NASA ANNOUNCES 1996 STTR PHASE II SELECTIONS

NASA's Office of Aeronautics and Space Transportation Technology today selected 13 research proposals for immediate negotiation of Phase II contracts in NASA's 1996 Small Business Technology Transfer (STTR) Pilot Program. The proposal selections are in support of the research topics included in the Agency's 1996 STTR solicitation.

A total of thirty-two Phase II proposals were submitted by contractors completing Phase I projects. All proposals were peer reviewed for both technical merit and commercial potential. Selections were based on the following factors: scientific and technical merit, including the degree to which Phase I objectives were met; future importance and eventual value of the product, process, or technology results to the NASA mission; capability of the small business concern and evidence of commercial potential.

The objective of a Phase I project is to determine the feasibility of the proposed research. Phase II continues the research of the most promising Phase I projects. Each of the thirteen selected Phase II proposals will be awarded a fixed-price contract valued up to $500,000 with a performance period of up to two years.

The STTR Program is similar to the Small Business Innovation Research (SBIR) Program but varies by requiring a small business concern to conduct cooperative research and development by partnering with a research institution. At least 40 percent of the work must be performed by the small business concern, and at least 30 percent of the work must be performed by the research institute.

-end-

NOTE TO EDITORS: A listing of the selected proposals is available on the Internet at the following URL:

http://sbir.nasa.gov

NewsRelease

National Aeronautics and
Space Administration

Washington, D.C. 20546
(202) 358-1600

For Release

Douglas Isbell
Headquarters, Washington, DC
(Phone: 202/358-1547)

October 7, 1997

Tammy Jones
Goddard Space Flight Center, Greenbelt, MD
(Phone: 301/286-5566)

Ray Villard
Space Telescope Science Institute, Baltimore, MD
(Phone: 410/338-4514)

Harlan Lebo
University of California at Los Angeles, CA
(Phone: 310/206-0510)

RELEASE: 97-227

HUBBLE IDENTIFIES WHAT MAY BE THE MOST LUMINOUS STAR KNOWN

Astronomers using NASA's Hubble Space Telescope have identified what may be the most luminous star known -- a celestial mammoth which releases up to 10 million times the power of the Sun and is big enough to fill the diameter of Earth's orbit. The star unleashes as much energy in six seconds as our Sun does in one year.

The image, taken by a University of California, Los Angeles (UCLA)-led team with the recently installed Near-Infrared Camera and Multi-Object Spectrometer (NICMOS) aboard Hubble, also reveals a bright nebula, created by extremely massive stellar eruptions. The nebula is so big (four light-years) that it would nearly span the distance from the Sun to Alpha Centauri, the nearest star to Earth's solar system.

The astronomers estimate that when the titanic star was formed one to three million years ago, it may have weighed up to 200 times the mass of the Sun before shedding much of its mass in violent eruptions.

"This star may have been more massive than any other star, and now it is without question still among the most massive -- even at the low end of our estimates," says Don F. Figer of UCLA. "Its formation and life stages will provide important tests for new theories about star birth and evolution."

- more -

The UCLA astronomers estimate that the star, called the "Pistol Star" (for the pistol shaped nebula surrounding it), is approximately 25,000 light-years from Earth near the center of the Milky Way galaxy. The Pistol Star is not visible to the eye, but is located in the direction of the constellation Sagittarius, hidden behind the great dust clouds along the Milky Way.

The Pistol Star was first noted in the early 1990s, but its relationship to the nebula was not realized until 1995, when Figer proposed in his Ph.D. thesis that the "past eruptive stages of the star" might have created the nebula. The Hubble spectrometer results confirm this conclusion.

The astronomers believe that the Pistol nebula was created by eruptions in the outer layers of the star which ejected up to 10 solar masses of material in giant outbursts about 4,000 and 6,000 years ago. The star will continue to lose more material, eventually revealing its bare hot core, sizzling at 100,000 degrees.

Burning at such a dramatic rate, the Pistol Star is destined for certain death in a brilliant supernova in 1-3 million years. "Massive stars are burning their candles at both ends; they are so luminous that they consume their fuel at an outrageous rate, burning out quickly and often creating dramatic events, such as exploding as supernovae," said Mark Morris, a UCLA professor of astronomy and co-investigator. "As these stars evolve, they can eject substantial portions of their atmospheres -- in the case of the Pistol Star, producing the nebula and an extreme stellar wind (outflow of charged particles) that is 10 billion times stronger than our Sun's."

The Pistol Star would be visible to the naked eye as a fourth magnitude star in the sky (which is quite impressive given its distance of 25,000 light-years) if it were not for interstellar dust clouds of tiny particles between the Earth and the center of the Milky Way that absorb the star's light. The most powerful telescopes cannot see the Pistol Star in visible wavelengths. However, ten percent of the infrared light leaving the Pistol Star reaches Earth, putting it within reach of infrared telescopes, which have seen rapid technological advances in recent years -- spurred by projects such as NICMOS.

The Pistol Star was so massive when it was born that it brings into question current thinking about how stars are formed, say the UCLA astronomers. In the current view, stars form within large dust clouds which contract under their own gravity, eventually forming hot clumps that ignite the hydrogen fusion process.

The star may radiate enough energy to halt the inward fall of material, thus limiting its maximum mass. The initial mass of the Pistol Star may have exceeded this theoretical upper limit. "It is perhaps no accident that this extreme-mass star is found near the center of the galaxy," says Morris. "Current evidence leads us to believe that the star formation process there may favor stars much more massive than our modest Sun."

Over the coming year, the team will be using the new near-infrared spectrometer that Ian S. McLean's team is building at UCLA for the giant 10-meter Keck II telescope in Hawaii. The new instrument will be used to measure the velocities of the expanding gas shells.

In addition to Figer, Morris, and McLean, the team also includes Caltech physicist Gene Serabyn and Columbia University astronomer R. Michael Rich.

The Space Telescope Science Institute is operated by the Association of Universities for Research in Astronomy, Inc. (AURA), for NASA, under contract with the Goddard Space Flight Center, Greenbelt, MD. The Hubble Space Telescope is a project of international cooperation between NASA and the European Space Agency.

- end -

EDITOR's NOTE: A photo and caption are available via the World Wide Web at:
http://oposite.stsci.edu/pubinfo/PR/97/33.html
and via links in
http://oposite.stsci.edu/pubinfo/Latest.html or
http://oposite.stsci.edu/pubinfo/Pictures.html.

Images are available via the World Wide Web at:
http://oposite.stsci.edu/pubinfo/gif/pistol.gif (GIF),
http://oposite.stsci.edu/pubinfo/jpeg/pistol.jpg (JPEG).

Image files also may be accessed via anonymous ftp from:
oposite.stsci.edu in /pubinfo: gif/pistol.gif (GIF) and jpeg/pistol.jpg (JPEG).

Higher resolution digital versions (300 dpi JPEG) of the release photograph are available in:
/pubinfo/hrtemp: 97-33.jpg (color) and 97-33bw.jpg (black & white). A full resolution TIFF image is available in:
/pubinfo/tiff/1997/33.tif.

NewsRelease

National Aeronautics and
Space Administration

Washington, D.C. 20546
(202) 358-1600

For Release

Douglas Isbell
Headquarters, Washington, DC
(Phone: 202/358-1753)

October 8, 1997

Philippe Collot
Centre National d'Etudes Spatiales (CNES), Paris
(Phone: 33-1-44-76-78-04)

NOTE TO EDITORS: N97-71

NASA AND FRENCH SPACE AGENCY SPONSOR SPACE OCEANOGRAPHY CONFERENCE

Oceanographic experts from around the world will meet Oct. 15-17 in Biarritz, France, to discuss the emerging prospects for an integrated approach to ocean science that combines space observations, in-situ measurements and numerical models in new ways that could lead to months-long forecasts of ocean dynamics on regional and global scales.

The symposium, titled "Monitoring the Oceans in the 2000s: An Integrated Approach," will focus on a variety of scientific results flowing from the U.S.-French TOPEX/POSEIDON satellite, launched in 1992, and plans for its smaller yet equally capable successor, Jason-1, due for launch in May 2000.

"TOPEX/POSEIDON has been a blueprint for productive international Earth science cooperation, and the findings of this symposium should lay the groundwork for Jason-1 to extend this cooperation through at least the early years of the 21st century," said William Townsend, Acting Associate Administrator for NASA's Office of Mission to Planet Earth, Washington, DC.

TOPEX/POSEIDON, a joint program of NASA and the Centre National d'Etudes Spatiales (CNES), the French space agency, uses two radar altimeters to precisely measure sea-surface height. Scientists use the data from TOPEX/POSEIDON to produce global maps of ocean topography every ten days. The satellite has mapped sea-surface height with an absolute accuracy of less than two inches (four centimeters), versus its design goal of six inches (13 centimeters).

-more-

A major focus of current TOPEX/POSEIDON research is the monitoring of the third weather-disrupting phenomenon known as El Niño that has been observed during the satellite's lifetime. An El Niño is thought to be triggered when steady westward blowing trade winds weaken and even reverse direction. This change in the winds allows the large mass of warm water that is normally located near Australia to move eastward along the equator until it reaches the coast of South America. This displaced pool of unusually warm water affects evaporation and where rain clouds form and, consequently, alters the typical atmospheric jet stream patterns around the world.

TOPEX/POSEIDON's sea-surface height data are essential to a better understanding of the role oceans play in regulating global climate change, one of the least understood areas of climate research. TOPEX/POSEIDON is part of NASA's Mission to Planet Earth, a coordinated, long-term research program to study the Earth as a global system.

-end-

NewsRelease

National Aeronautics and
Space Administration

Washington, D.C. 20546
(202) 358-1600

For Release

Michael Braukus
Headquarters, Washington, DC
(Phone: 202/358-1979)

October 8, 1997

Linda Matthews-Schmidt
Johnson Space Center, Houston, TX
(Phone: 281/483-5111)

RELEASE: 97-228

TEAM BEGINS TEST OF ADVANCED LIFE SUPPORT SYSTEM

The next phase of testing of regenerative life support systems has begun at NASA's Johnson Space Center, Houston, TX. A crew of four is being maintained in an air-tight chamber environment for 90 days testing life support systems for future space exploration missions, such as a mission to Mars.

Phase III of the Lunar-Mars Life Support Test Project began on Sept. 19, 1997. It is the fourth in a series of tests being conducted at Johnson. This phase uses a combination of physical, mechanical, and biological methods to recycle air and water. The four-person crew will spend more than 90 days investigating the use of biological, mechanical, and chemical means to recycle all their air and water and provide some of their food. Regenerative life support is a critical enabling technology for future human deep-space missions, since astronauts cannot carry the supplies necessary to support a trip to Mars or a base on the Moon.

The test crew members for Phase III are Crew Commander Dr. Nigel Packham (36, Lockheed-Martin Life Support System Scientist); Vickie Kloeris (41, NASA Shuttle Food System Manager), John Lewis (30, Lockheed-Martin Life Support System Engineer) and Laura Supra (28, Allied Signal Life Support System Engineer). They plan to remain in the chamber until late December to evaluate the effectiveness of advanced regenerative life support systems.

- more -

The current test utilizes biological systems for the primary means of water recovery and employs a combination of mechanical and biological systems to revitalize the air. A module containing wheat crops will be linked to the test chamber to provide up to 25 percent of the crew's oxygen from the carbon dioxide produced by the crew in the 20-foot chamber. Water consumed by the crew will be recycled using a unique biological and physical/chemical water recovery system designed at Johnson. Solid waste from the crew will be incinerated to produce additional carbon dioxide to sustain plant growth for air revitalization and food production.

The team members will provide daily status reports on the operation of the life support systems, as well as crew habitability criteria. The prime and backup crews also will conduct fourteen demonstration projects during the test including both physiological and psychological medical investigations and evaluations of food systems and of astronaut training techniques.

The current test continues investigations begun on three previous tests, conducted in August 1995, June-July 1996, and January-March 1997. In the first test, Packham spent fifteen days in a 10-foot chamber using a crop of wheat plants to recycle breathing air. A 30-day test followed in 1996 with four volunteers in the 20-foot chamber evaluating the effectiveness of advanced mechanical and chemical systems to recycle air and water. The third test employed mechanical and chemical systems functionally similar to those planned for use aboard the International Space Station to purify air and water supplies for 60 days.

NOTE TO EDITORS: The latest information about the chamber test, including daily updates from the crew, can be found at the Phase III web site at URL:

http://pet.jsc.nasa.gov

A press conference with the Advanced Life Support Management team and test chamber crew is scheduled on NASA TV for Oct. 9, 1997 at 1 p.m. EDT from the Johnson Space Center. A tour of the Advanced Life Support Program facilities will be conducted immediately after the press conference for attending media.

- end -

Contract Announcement

National Aeronautics and
Space Administration

Washington, D.C. 20546
(202) 358-1600

For Release

Debra Rahn
Headquarters, Washington, DC
(Phone: 202/358-1639)

October 10, 1997

Jerry Berg
Marshall Space Flight Center, Huntsville, AL
(Phone: 205/544-0034)

RELEASE: C97-r

VIRGINIA FIRM CHOSEN TO PROVIDE NASA INSTITUTIONAL SERVICES

Scientific and Commercial Systems Corp., Falls Church, VA, has been awarded a contract by NASA's Marshall Space Flight Center, Huntsville, AL, to provide a variety of support services at the center beginning Oct. 15, 1997.

If all options are exercised, the Institutional Services contract could be worth approximately $66,306,538.

The types of work to be performed under this contract include transportation and special equipment; documentation repository; graphics, publication, and scientific and technical publishing; supply and equipment management; equipment maintenance and repair; mail services; reproduction; food services; and Educator Resource Center support.

The cost-plus-incentive-fee, performance-based contract will be divided into an 11 and 1/2-month base period and four one-year options, which may be exercised at NASA's discretion.

Most of the services to be provided are a continuation of an effort currently being performed under the Institutional Mission Services contract by MSI, A Division of the Bionetics Corporation, Newport News, VA.

- end -

News Release

National Aeronautics and
Space Administration

Washington, DC 20546
(202) 358-1600

For Release

October 14, 1997

Debra Rahn
Headquarters, Washington, DC
(Phone: 202/358-1778)

John Bluck
Ames Research Center, Moffett Field, CA
(Phone: 650/604-5026)

RELEASE: 97-229

SHUTTLE LANDING SIMULATIONS TO IMPROVE WITH SMART SOFTWARE

Even after each pilot astronaut makes 500 practice landings with a training aircraft that simulates the Space Shuttle Orbiter, landing the actual Shuttle for the first time is a challenging task. To assist future Shuttle pilots, NASA will install new, intelligent software in the training aircraft to make its approach and landing 'feel' even more like a Shuttle landing.

"Tests of the smart software in simulators on the ground with the Shuttle Training Aircraft hardware were extremely successful, proving that the trainer airplane using new computer coding will seem a lot more like a Shuttle as it comes in and lands. Landing an orbiter for the first time will seem a lot more familiar to astronauts," said Dr. Hamid Berenji, software project manager at NASA's Ames Research Center, Moffett Field, CA.

The improvements are detailed in a technical paper recently presented in Barcelona, Spain. Authors were Berenji and Dr. Ping-Wei Chang, computer scientists at Ames, and Steven R. Swanson of the Shuttle Training Branch at the Johnson Space Center, Houston, TX.

"In keeping with one of NASA's major goals to increase flight safety, the new software could be used to improve all kinds of simulators, from airplanes to simulations done in special machines," said Berenji.

"We think private pilots, commercial pilots and even people learning to operate new machines could greatly benefit if the software is used to improve training simulators," he explained.

The new software to be installed in the Gulfstream II Shuttle Training Aircraft refines the 'rules' that onboard computers use to simulate the Orbiter's descent from 35,000 feet to landing.

- more -

The special software uses a form of 'adaptive fuzzy logic' that programs a computer with words as well as with numbers, explained Berenji. In addition, it uses 'neuro fuzzy logic' to learn by experience, changing the patterns it uses to make decisions.

Berenji says the new software is closer to human thinking than previous software, and computers equipped with neuro fuzzy logic can accurately be called rudimentary mechanical brains.

Ground tests show that the trainer aircraft will handle about 20 percent better than before, according to Berenji. This equals a 69 percent error reduction. "We expect that new astronaut-pilot confidence will be much higher," he said. "That means Shuttle safety will be improved, too," he added.

-end-

NewsRelease

National Aeronautics and
Space Administration

Washington, D.C. 20546
(202) 358-1600

For Release

Debra Rahn
Headquarters, Washington DC
(Phone: 202/358-1639)

October 8, 1997

Eileen Hawley
Johnson Space Center, Houston, TX
(Phone: 281/483-5111)

RELEASE: 97-230

COCKRELL NAMED CHIEF ASTRONAUT

Three-time Shuttle veteran Kenneth D. Cockrell has assumed the role of Chief of the Astronaut Office, replacing Robert D. Cabana (Col., USMC).

"Bob's performance as Chief of the Office has been outstanding, and now he can turn his full attention to STS-88," said David C. Leestma, Director of Flight Crew Operations.

Cabana, who served as Chief Astronaut since mid-1994, is training for Shuttle mission STS-88, the first United States assembly flight to build the International Space Station. STS-88 is scheduled for a July 1998 launch.

"I have thoroughly enjoyed the challenge of being Chief of the Astronaut Office, and have mixed emotions about stepping down," Cabana said. "I know the astronaut corps will give its full support to Ken and have every confidence he will do a super job. Now it's time for me to focus my attention on the first Space Station assembly mission."

Cockrell first flew as a mission specialist on the crew of STS-56 aboard Discovery on a mission to study the Earth's atmosphere and later was the pilot on STS-69 in September 1995, the second flight of the Wake Shield Facility. In late 1996, he commanded the crew of STS-80, the third flight of the Wake Shield Facility, which studied the use of the ultra-vacuum of space to develop high-quality semiconductor materials.

For complete biographical information on Cockrell, or any astronaut, see the NASA Internet biography home page at URL: http://www.jsc.nasa.gov/Bios/

-end-

Date: Thu, 9 Oct 1997 16:33:35 -0400 (EDT)
Subject: The NASA Safety Reporting System (NSRS)
From: InfoCom <infocom@hq.nasa.gov>
Sender: owner-headquarters@lists.hq.nasa.gov

To: All NASA Employees and Contractors

From: Frederick D. Gregory, Associate Administrator for Safety and Mission Assurance

Subject: The NASA Safety Reporting System (NSRS)

Safety is NASA's highest priority. Our mission is inherently risky, and NASA and its contractors must remain ever vigilant to ensure that we place the highest possible attention and emphasis on safety.

Timely information about actual or potential safety problems is critical to the Agency's success. NASA relies on its entire workforce, civil service and contractor alike, to notify management or their local safety office, through normal channels, of any issues regarding safety.

Sometimes normal reporting channels are not enough. The NASA Safety Reporting System (NSRS) is a confidential, voluntary, and responsive safety reporting system available to all NASA employees and contractors. If you have a safety concern which you feel has not been resolved through normal channels, or if you have reason not to report through normal channels, the NSRS provides a direct, anonymous channel to convey your safety concern to the NASA Safety and Risk Management Division and upper level NASA management. NSRS information and postage paid reporting forms are available at each NASA and contractor location. Additional information on NSRS is available on the world wide web at:

http://www.hq.nasa.gov/office/codeq/nsrs1.htm

In today's challenging environment, it is essential that each of us remain alert to safety issues. Safety issues must be surfaced so that they may be resolved in a timely manner.

Thank you for your commitment to safety. Remember, "If it's not safe, say so."

This email message is being transmitted by the
Communications Management Division. For more information on
InfoCom services, call 358-2299 or 358-4817, or visit the InfoCom web page
at http://www.hq.nasa.gov/hq/infocom.htm

Date: Thu, 9 Oct 1997 16:01:07 -0400 (EDT)
From: NASANews@hq.nasa.gov
Subject: NASA Provides Two-Year Extension to Johnson Controls
Sender: owner-press-release@lists.hq.nasa.gov
To: undisclosed-recipients:;

Michael Braukus
Headquarters, Washington, DC October 9, 1997
(Phone: 202/358-1979)

Lanee Cobb
Stennis Space Center, MS
(Phone: 601/688-3341)

RELEASE: C97-p

NASA PROVIDES TWO-YEAR EXTENSION TO JOHNSON CONTROLS

NASA has provided for a two-year extension of a facilities support services contract with Johnson Controls World Services Inc., Cape Canaveral, FL, Aerospace Services-SSC Project, at the Stennis Space Center, Hancock County, MS.

NASA exercised the eighth priced option on a cost and firm-fixed type of contract, a portion of which involves performance-based contracting. Total cost of the option is $51,255,690 for the period of one year beginning Aug. 28, 1997.

Johnson Controls World Services Inc. provides facility operating support services at Stennis. This includes support to on-site NASA programs involved in propulsion test programs; space and environmental activities; applied research; and environmental and resource management.

The company also provides facility support services to other resident agencies in the following categories: operation and maintenance of real and installed property; institutional services; supply and equipment management; and construction services and installation services.

Stennis Space Center is NASA's lead center for rocket propulsion testing and for commercial remote sensing. NASA also is the host agency to 30 other agencies resident at Stennis.

- end -

Date: Thu, 9 Oct 1997 16:02:04 -0400 (EDT)
From: NASANews@hq.nasa.gov
Subject: NASA Selects Rapid Spacecraft Contractors
Sender: owner-press-release@lists.hq.nasa.gov
To: undisclosed-recipients:;

Doug Isbell
Headquarters, Washington, DC October 9, 1997
(Phone: 202/358-1600)

Tammy Jones
Goddard Space Flight Center, Greenbelt, MD
(Phone: 301/286-5566)

RELEASE: C97-q

NASA SELECTS RAPID SPACECRAFT CONTRACTORS

NASA's Goddard Space Flight Center in Greenbelt, MD, has awarded multiple Indefinite Delivery/Indefinite Quantity contracts for satellite core-systems to support NASA's space science, earth science and technology needs. The awarded contracts will be open for use by all NASA Centers and other Government agencies furthering NASA's Contract Consolidation Initiative.

"We're really excited about the start of a revolutionary 'new way of doing business' in the acquisition of spacecraft which takes advantage of previous government and industry investments," said Joseph Rothenberg, Director of Goddard. "This approach promises our scientific customers an opportunity for far quicker and cheaper access to space. We have already seen evidence of high demand for this service."

As NASA identifies missions, the contract holders, listed below, will be given an opportunity to compete for providing the spacecraft. All mission specific spacecraft will be awarded under firm fixed-price delivery orders with delivery expected between 18 and 36 months after placement of the delivery order. The placement of orders is expected to take between 30 and 90 days, improving the lead time from identification of a need to the placement of a contract to begin work toward the delivery and launch of the satellite.

The following companies were awarded contracts:

Ball Aerospace Systems Division, Boulder, CO
Lockheed Martin Missiles and Space, Sunnyvale, CA

Orbital Sciences Corporation, Germantown, MD
Space Systems/Loral, Palo Alto, CA
Spectrum Astro, Gilbert, AZ
Surrey Satellite Technology Ltd., UK
Swales Aerospace, Beltsville, MD
TRW, Inc., Redondo Beach, CA

Each contract will have a minimum value of $100,000 and a maximum value of $755 million, with a three year ordering period. The first two spacecraft delivery orders are expected to be placed in the first quarter of fiscal year 1998.

-end-

Date: Thu, 9 Oct 1997 16:00:35 -0400 (EDT)
From: NASANews@hq.nasa.gov
Subject: Breaking the Sound Barrier Reenactment on NASA TV
Sender: owner-press-release@lists.hq.nasa.gov
To: undisclosed-recipients:;

Dwayne Brown
Headquarters, Washington, DC October 9, 1997
(Phone: 202/358-1726)

Fred Brown
Dryden Flight Research Center, Edwards ,CA
(Phone: 805/258-2663)

Michael Finneran
Langley Research Center, Hampton, VA
(Phone: 757/864-6121)

John Haire
Edwards Air Force Base, CA
(Phone: 805/277-4127)

NOTE TO EDITORS: N97-72

BREAKING THE SOUND BARRIER REENACTMENT ON NASA TV

NASA TV will air a reenactment of Chuck Yeager's historic flight in which he became the first person to successfully fly an aircraft faster than the speed of sound. Yeager's flight in 1947 has been called "the greatest achievement since the first successful flight of the Wright Brothers."

Exactly 50 years after the event, Yeager will recreate this milestone flight in an F-15 fighter jet in California's northern Mojave Desert. The reenactment will air beginning at 1 p.m. EDT, Oct. 14. Other activities to commemorate the anniversary will be held at Edwards Air Force Base, CA, including the unveiling of a "50th anniversary of supersonic flight" stamp by the United States Postal Service.

NASA TV will also feature historic footage of the original event as well as footage of the development of the next generation supersonic jet that will fly 300 passengers at more than twice the speed of sound. Included will be an interview with the director of that project. Live interviews also can be arranged by calling Ivelisse Gilman at NASA's Langley Research Center, Hampton, VA, 757/864-5036.

Detailed information about the X-1, the development and research of supersonic flight and the pilots involved is available via the Internet. The URL is:
http://www.hq.nasa.gov/office/pao/History/x1/

NASA television is broadcast on GE-2, transponder 9C at 85 degrees West longitude, vertical polarization, frequency of 3880 MHz, with audio at 6.8 Mhz.

-end-

Video Advisory

National Aeronautics and
Space Administration
Washington, DC 20546
(202) 358-1600

For Release
Oct. 9, 1997

Debbie Rivera
Headquarters, Washington, DC
(Phone: 202/358-1743)

VIDEO ADVISORY: V97-101

3-D EL NINO ANIMATION; NEW EARTH IMAGES; SUPERSONIC'S 50TH

Today's video package shows the latest images of El Nino in a 3-D visualization combining sea surface height, temperatures and wind patterns. In addition, NTV will provide new images of the Chesapeake Bay, Lake Michigan, the Gulf of Mexico, Lake Titicaca in South America, Greece, Italy, the Nile, and a global image of the Earth, along with a bird's eye view of the fires in Indonesia Lastly, NTV has footage of the aeronautic achievement from breaking the sound barrier to the next generation of supersonic flight.

ITEM 1: WEATHERING THROUGH THE STORM WITH EL NINO
ITEM 1a: 3-D EL NINO ANIMATION
ITEM 1b: SEA SURFACE HEIGHT AND WIND STRESS ANOMALIES
ITEM 1c: SEA SURFACE TEMPERATURE ANOMALIES
ITEM 1d: SEA SURFACE HEIGHT ANOMALIES
ITEM 1e: EL NINO B-ROLL
ITEM 1f: INTERVIEW - TONY BUSALACCHI, CHIEF, LABORATORY OF HYDROSPHERIC PROCESSES, GODDARD SPACE FLIGHT CENTER
ITEM 2: VIEWING LIFE FROM SPACE
New images of Earth from the Sea-viewing Wide Field-of-View Sensor.
ITEM 3: TRAILING A BLAZE
A unique perspective of the enormous fires that have ravaged Indonesia.
For more information contact Doug Isbell at (202) 358-1753 or Wade Sisler at (301) 286-6265.
ITEM 4: CASSINI ANIMATION
ITEM 4a: CASSINI B-ROLL
For more information contact Doug isbell at (202) 358-1753 or Frank O'Donnell at (818) 354-5011.
ITEM 5: 50TH ANNIVERSARY OF SUPERSONIC FLIGHT

Video news file today at noon, 3, 6, 9 p.m. and midnight EDT.

NASA Television is available on GE-2, transponder 9C at 85 degrees West longitude, with vertical polarization. Frequency is on 3880.0 megahertz, with audio on 6.8 megahertz.

Contract Announcement

National Aeronautics and
Space Administration

Washington, D.C. 20546
(202) 358-1600

For Release

Debra Rahn
Headquarters, Washington, DC
(Phone: 202/358-1639)

October 10, 1997

Jerry Berg
Marshall Space Flight Center, Huntsville, AL
(Phone: 205/544-0034)

RELEASE: C97-r

VIRGINIA FIRM CHOSEN TO PROVIDE NASA INSTITUTIONAL SERVICES

Scientific and Commercial Systems Corp., Falls Church, VA, has been awarded a contract by NASA's Marshall Space Flight Center, Huntsville, AL, to provide a variety of support services at the center beginning Oct. 15, 1997.

If all options are exercised, the Institutional Services contract could be worth approximately $66,306,538.

The types of work to be performed under this contract include transportation and special equipment; documentation repository; graphics, publication, and scientific and technical publishing; supply and equipment management; equipment maintenance and repair; mail services; reproduction; food services; and Educator Resource Center support.

The cost-plus-incentive-fee, performance-based contract will be divided into an 11 and 1/2-month base period and four one-year options, which may be exercised at NASA's discretion.

Most of the services to be provided are a continuation of an effort currently being performed under the Institutional Mission Services contract by MSI, A Division of the Bionetics Corporation, Newport News, VA.

- end -

NewsRelease

National Aeronautics and
Space Administration

Washington, D.C. 20546
(202) 358-1600

For Release

Debra Rahn
Headquarters, Washington, DC
(Phone: 202/358-1639)

October 10, 1997

Eileen Hawley
Johnson Space Center, Houston, TX
(Phone: 281/483-5111)

RELEASE: 97-231

THOMAS WILL CONTINUE AMERICAN PRESENCE ON MIR

Astronaut Andrew S.W. Thomas, Ph.D., has been named as the final U.S. crew member to live and work aboard Russia's Mir space station.

Thomas will launch aboard Endeavour as a member of the STS-89 crew in January 1998 to begin a four month stay on Mir. He has been training in Russia since January of this year as the backup to Dr. David Wolf, who began his tour aboard Mir on Sept. 28.

"Andy's assignment to Mir provides a great deal of flexibility to support crew activities on board," said David C. Leestma, director of Flight Crew Operations. "I have every confidence in his abilities. He will be a valuable addition to the crew."

Thomas, recently in the U.S. for science training to support his Mir mission, returned to the Gagarin Cosmonaut Training Center in Star City, Russia, outside Moscow in early October. Joining Thomas on the return trip to Russia was astronaut James S. Voss (Col. USA), who will serve as Thomas' backup. Voss has been training in Russia as backup to Michael Foale. Thomas will join previously named STS-89 crew members Commander Terrence W. Wilcutt (Lt. Col., USMC); Pilot Joe Edwards (Cmdr., USN); and Mission Specialists Bonnie J. Dunbar, Ph.D.; Michael P. Anderson (Major, USAF); and James F. Reilly, II, Ph.D. Wolf will return to Earth aboard Endeavour as he completes his four-month Mir mission.

Thomas' scheduled departure from Mir next May will conclude more than two years of continuous American presence on Mir, which began in March 1996 with the arrival of astronaut Shannon Lucid. Thomas will come home aboard Discovery with the crew of STS-91 in May 1998.

For complete biographical information on Thomas, Voss or any astronaut, see the NASA Internet biography home page at URL: http://www.jsc.nasa.gov/Bios/

-end-

Video Advisory

National Aeronautics and
Space Administration

Washington, DC 20546
(202) 358-1600

For Release
Oct. 14, 1997

Renee Juhans
Headquarters, Washington, DC
(Phone: 202/358-1712)

VIDEO ADVISORY: V97-102

NASA'S SMART SOFTWARE: OH WHAT A FEELING!

Today's video package shows how NASA will use a new, intelligent software in training aircraft to make the approach and landing "feel" even more like a Space Shuttle landing. The software could be used to improve all kinds of simulators from airplanes to simulations done in special machines.

ITEM 1: FEELS LIKE A SHUTTLE LANDING

Footage of cockpit views, aircraft take-off and descent, Shuttle landing, and animation.

ITEM 1a: INTERVIEW - DR. HAMID BERENJI, COMPUTER SCIENTIST, AMES RESEARCH CENTER

ITEM 1b: INTERVIEW - DR. PING-WEI CHANG, COMPUTER SCIENTIST, AMES RESEARCH CENTER

For more information contact Michael Braukus at (202) 358-1778 or John Bluck at (650) 604-5026.

ITEM 2: REPLAY - 50TH ANNIVERSARY OF SUPERSONIC FLIGHT

Video news file today at noon, 3, 6, 9 p.m. and midnight EDT.

NASA Television is available on GE-2, transponder 9C at 85 degrees West longitude, with vertical polarization. Frequency is on 3880.0 megahertz, with audio on 6.8 megahertz.

-end-

NewsRelease

National Aeronautics and
Space Administration

Washington, D.C. 20546
(202) 358-1600

For Release

Douglas Isbell
Headquarters, Washington, DC
(Phone: 202/358-1753)

October 14, 1997

Diane Ainsworth
Jet Propulsion Laboratory, Pasadena, CA
(Phone: 818/354-5011)

RELEASE: 97-232

GLOBAL SURVEYOR'S ORBIT RAISED WHILE SOLAR PANEL IS ANALYZED

The lowest point of Mars Global Surveyor's aerobraking orbit has been raised temporarily, and aerobraking has been suspended while the flight team analyzes data to understand why one of the spacecraft's two solar panels, which had not fully deployed, exhibited unexpected motion during a recent dip through the upper Martian atmosphere.

The spacecraft's current 35-hour orbit around Mars, which was taking it down to 75 miles (121 kilometers) above the Martian surface during each of its closest passes over the planet, has been raised to 105 miles (170 kilometers). The orbit was raised Oct. 12 by the operations team at NASA's Jet Propulsion Laboratory (JPL), Pasadena, CA, and Lockheed Martin Astronautics, Denver, CO, by performing a brief, 5.15-mile-per-hour (2.3-meter-per-second) propulsive burn at the farthest point of the spacecraft's orbit around Mars. The panel's performance has had no effect on spacecraft power.

"We're taking a hiatus from aerobraking for the next few weeks while we study data to try to model and understand the apparent deflection of the solar panel that never fully deployed and latched in place after launch," said Glenn E. Cunningham, Mars Global Surveyor project manager at JPL. "This delay in the aerobraking process will probably change the spacecraft's final mapping orbit from the originally planned 2 p.m. local Mars time passage over the planet's equator to another time, and we are studying several other orbits that will give us nearly the same quality of science results."

Preliminary data from the panel indicate that it has moved past what would have been its fully deployed and latched position, Cunningham said. In addition, the panel has shown some movement, rather than maintaining its rigid position during aerobraking. These changes occurred during the spacecraft's fifteenth close approach to Mars, on Oct. 6, when the density of the Martian atmosphere doubled unexpectedly.

-more-

During the next few weeks, the Mars Global Surveyor flight team will leave the spacecraft's orbit in the current, 35-hour revolution around Mars, which will not take the spacecraft through the upper atmosphere of Mars, while they analyze data and simulate conditions in the Martian atmosphere to understand the behavior of the solar panel. This hiatus also means the spacecraft's solar panels will not be reconfigured for each close pass over Mars, but will remain in the normal cruise position.

"We can't yet explain what has happened," Cunningham said. "We saw the unlatched panel move past the latched-up position, and it remains past that point now. By raising the spacecraft's orbit above the upper atmosphere, the panel should not shift further because it will not be exposed to the aerodynamic forces of the Martian atmosphere."

Several other mapping orbits are available to Mars Global Surveyor to carry out its science objectives. The flight team will explore alternatives in the next few weeks to accomplish the lowest orbit possible and achieve a "sun-synchronous" orbit that will allow Global Surveyor to fly over the Martian equator at the same local solar time each orbit. These sun-synchronous orbits are designed so that the spacecraft's instruments always see Mars at the same lighting angle on every pass over the surface.

"As we step back from aggressive aerobraking temporarily, we will have the opportunity to study the situation until we fully understand it. We will take advantage of this opportunity to return some spectacular data from the camera and laser altimeter," Cunningham said. "The thermal emission spectrometer and magnetometer/electron reflectometer also will continue to collect data while we remain in this holding pattern."

The Mars Global Surveyor atmospheric advisory group reported that the Martian atmosphere has more than doubled in thickness in the last week. Global Surveyor is designed to withstand more than a 50 percent increase in atmospheric density, but began showing movement in the solar panel last week, during the fifteenth close approach on Oct. 6.

Additional information about the Mars Global Surveyor mission is available on the World Wide Web by accessing JPL's Mars news site at URL:

http://www.jpl.nasa.gov/marsnews

or the Global Surveyor project home page at URL:

http://mars.jpl.nasa.gov

Mars Global Surveyor is part of a sustained program of Mars exploration, known as the Mars Surveyor Program. The mission is managed by JPL for NASA's Office of Space Science, Washington, DC. JPL's industrial partner is Lockheed Martin Astronautics, Denver, CO, which developed and operates the spacecraft. JPL is a division of the California Institute of Technology, Pasadena, CA.

-end-

NewsRelease

National Aeronautics and
Space Administration

Washington, D.C. 20546
(202) 358-1600

For Release

Michael Braukus/Debra Rahn
Headquarters, Washington, DC
(Phone: 202/358-1979)

October 14, 1997

Ann Hutchison
Johnson Space Center, Houston TX
(Phone: 281/483-5111)

RELEASE: 97-233

NASA SIGNS INTERNATIONAL SPACE STATION AGREEMENT WITH BRAZIL

NASA Administrator Daniel S. Goldin and the Brazilian Space Agency President Dr. Luiz Gylvan Meira today signed an implementing arrangement providing for the design, development, operation and use of Brazilian developed flight equipment and payloads for the International Space Station (ISS).

Under this arrangement, the Brazilian Space Agency (AEB) will provide for use on the Space Station a Technology Experiment Facility (TEF) and an Expedite the Processing of Experiments to Space Station (EXPRESS) pallet. The TEF will provide long-term exposure to the space environment for active and passive experiments. EXPRESS will serve as an interface mechanism to attach small payloads to U.S. truss segments of the Space Station. Both pieces of hardware will provide greater capability for experiments that require exposure to the space environment on the station's exterior.

Brazil also will supply a Window Observational Research Facility, which will be used as a mount with data and power connections for optical experiments to perform observations of the Earth. Other contributions will include an Unpressurized Logistics Carrier (ULC) and associated equipment for transportation of ISS cargo on the Space Shuttle. The ULC is a cargo carrier to be used for station items, such as exterior spare parts and maintenance equipment, that do not require a pressurized environment. In exchange for AEB-provided equipment and support, NASA will provide Brazil with access to its ISS facilities on-orbit, as well as a flight opportunity for one Brazilian astronaut during the course of the ISS program.

With the signing of this arrangement, Brazil joins as a bilateral partner of the United States in the International Space Station.

-more-

The assembly of the ISS begins in June 1998 with the launch of the Functional Cargo Block, a U.S. financed, Russian built and launched vehicle. The U.S. node is scheduled for launch on Shuttle mission STS-88 in July 1998. Assembly of the Space Station will be completed in 2003.

-end-

News Release

National Aeronautics and
Space Administration

Washington, DC 20546
(202) 358-1600

For Release

October 15, 1997

Debra J. Rahn
Headquarters, Washington, DC
(Phone: 202/358-1639)

Eileen Hawley
Johnson Space Center, Houston, TX
(Phone: 281/483-5111)

RELEASE: 97-234

COSMONAUT ROUNDS OUT STS-89 CREW

Cosmonaut Salizhan Shakirovich Sharipov, a first-time space flyer, has joined the crew of STS-89, the eighth Shuttle/Mir docking mission.

Sharipov, 32, was born in Uzgen, Kirghizia. Selected as a cosmonaut in 1990, he completed training in 1992, qualified for space flight as a crew commander. Prior to his selection by the Gagarin Cosmonaut Training Center, Sharipov was an Air Force pilot and has experience flying the MIG-21 aircraft.

"Since beginning training in August, Sharipov has fully integrated himself into STS-89 crew activities," said David C. Leestma, director of Flight Crew Operations. "He is working with his crew mates to support all of the mission objectives."

STS-89 is targeted for a January 1998 launch to dock with Russia's Mir space station. Sharipov will be assisting the Mir and Shuttle crews in the transfer of logistical supplies between the two vehicles.

The mission will be commanded by Terrence W. Wilcutt (Lt. Col. USMC). Also on board will be Pilot Joe Edwards (Cmdr., USN) and Mission Specialists Bonnie J. Dunbar, Ph.D.; Michael P. Anderson (Major, USAF); James F. Reilly, II, Ph.D.; and Andrew Thomas, Ph.D. Thomas will remain on Mir to begin a four-month stay and continue the American presence, replacing David Wolf, M.D., who will return to Earth as a member of the STS-89 crew.

For complete biographical information on Sharipov or any astronaut, see the NASA internet biography home page at URL:

http://www.jsc.nasa.gov/Bios/

-end-

NewsRelease

National Aeronautics and
Space Administration

Washington, D.C. 20546
(202) 358-1600

For Release

Donald Savage
Headquarters, Washington, DC
(Phone: 202/358-1547)

October 16, 1997

RELEASE: 97-235

NASA SELECTS TWO SMALL EXPLORER MISSIONS AND ONE MISSION OF OPPORTUNITY FOR DEVELOPMENT

The selection of two new science missions to investigate flares on the Sun and the evolution of galaxies was announced today by Dr. Wesley T. Huntress, NASA Associate Administrator for Space Science. Also selected was a mission of opportunity which will pinpoint the location of gamma ray bursts in the sky.

The first mission, High Energy Solar Spectroscopic Imager (HESSI), will observe the Sun to study particle acceleration and energy release in solar flares. The Principal Investigator is Dr. Robert P. Lin, University of California, Berkeley. The science team includes scientists from the U.S., Switzerland, France, Japan, the United Kingdom and The Netherlands. HESSI, which is scheduled for launch in 2000 aboard an Orbital Sciences Corp. Pegasus rocket, will cost $67 million including launch.

The second mission, called Galaxy Evolution Explorer (GALEX), will use an ultraviolet telescope during its two-year mission to explore the origin and evolution of galaxies and the origins of stars and heavy elements. The Principal Investigator is Dr. Christopher Martin, California Institute of Technology, Pasadena. GALEX will detect millions of galaxies out to a distance of billions of light years and also will conduct an all-sky ultraviolet survey. The mission will cost $65 million including launch, and will be launched aboard a Pegasus rocket in 2001.

Selected as an alternate mission in case one of the primary missions does not progress to launch, the Broadband Observatory for Localization of Transients (BOLT) mission will pinpoint locations of gamma ray bursters, the most energetic objects known in the universe. Bursters emit in a few seconds as much energy as an entire galaxy emits in a year. BOLT, which will cost $66 million including launch, will detect the positions of gamma ray bursters and immediately radio this information to telescopes on the ground, enabling visual identification of these quickly-disappearing events.

The missions were selected under the Small Explorer (SMEX) program. This program provides frequent flight opportunities for highly focused and relatively inexpensive science missions that typically weigh around 500 pounds or less.

- more -

Selected as a mission of opportunity, the $15 million Two Wide-Angle Neutral-Atom Spectrometers (TWINS) mission will be launched in 2001 or 2003 aboard a currently undesignated U.S. Government mission. TWINS will provide stereo imaging of the Earth's magnetosphere, the region surrounding the planet controlled by its magnetic field and containing the Van Allen radiation belts and other energetic charged particles. TWINS will enable three-dimensional global visualization of this region, which will lead to greatly enhanced understanding of the connections between different regions of the magnetosphere and their relation to the solar wind. Dr. David McComas, Los Alamos National Laboratory, NM, is the Principal Investigator.

The Small Explorer Program is managed by NASA's Goddard Space Flight Center, Greenbelt, MD, for the Office of Space Science, Washington, DC.

- end -

NewsRelease

National Aeronautics and
Space Administration

Washington, D.C. 20546
(202) 358-1600

For Release

Debra J. Rahn
Headquarters, Washington, DC
(Phone: 202/358-1639)

October 17, 1997

Eileen Hawley
Johnson Space Center, Houston, TX
(Phone: 281/483-5111)

RELEASE: 97-236

ASTRONAUT TOM HENRICKS RETIRES

Four-time Shuttle astronaut Terence T. "Tom" Henricks (Col., USAF) will retire from NASA and the Air Force to begin a career in private industry. Henricks, a native of Ohio, will join The Timken Company in Canton, OH, in November.

Selected as an astronaut in 1985, Henricks has commanded two Shuttle missions and piloted two others. His first flight was as pilot on STS-44 in November 1991 and was followed by STS-55, the German D-2 Spacelab mission in April/May 1993. He was the commander of STS-70, dubbed the "all Ohio crew," in July 1995 and commanded STS-78, a dedicated Life and Microgravity Sciences Mission, in July 1996. Retiring as a Colonel in the U.S. Air Force, Henricks will conclude a 23-year military career.

"We wish Tom all the best as he returns home to pursue this new opportunity," said David C. Leestma, director of Flight Crew Operations. "We will miss his experience and friendship."

"I will miss the wonderfully talented, dedicated people that make each Space Shuttle mission a success," Henricks said. "Their combined efforts presented experiences which I will cherish for the rest of my life. My twelve years at NASA literally flew by!"

For complete biographical information on Henricks, or any astronaut, see the NASA Internet biography home page at URL: http://www.jsc.nasa.gov/Bios/

-end-

NewsRelease

National Aeronautics and
Space Administration

Washington, D.C. 20546
(202) 358-1600

For Release

Douglas Isbell
Headquarters, Washington, DC
(Phone: 202/358-1753)

October 18, 1997

RELEASE: 97-238

NASA AND ARGENTINA SIGN AGREEMENTS ON FUTURE COOPERATION

NASA Administrator Daniel S. Goldin and Dr. Conrado Franco Varotto, Executive Director of the Argentina National Commission on Space Activities (CONAE), signed memoranda of understanding (MOU) on the Satelite de Aplicaciones Cientificas (SAC)-C and (SAC)-A today in Buenos Aires, Argentina. Mr. Goldin was in Buenos Aires accompanying President Bill Clinton.

SAC-C will conduct correlated observations of the Earth of interest to Argentina and the United States, and also will contribute directly to the NASA Mission to Planet Earth Program. SAC-C will entail the flight of an Argentine Multispectral Medium Resolution Scanner (MMRS) that will be used primarily by Argentina to monitor forest inventory in the Argentine region of Mesopotamia; predict agricultural production in the Pampean region; evaluate and elaborate maps of the Patagonian desert; monitor pollution; evaluate changes in the Chacoan forests and correlate these changes with atmospheric changes in CO2; and examine circulation and productivity in marine coastal areas. SAC-C also will carry magnetic field instruments provided by the Danish Meteorological Institute, which will include a NASA-provided scalar magnetometer to monitor the main geomagnetic field, map lithospheric magnetic anomalies and study ionospheric current systems.

A NASA-provided Global Positioning Satellite (GPS) receiver will determine the position of the spacecraft to the subdecimeter level, provide timing control, provide estimates of atmospheric index of refraction and atmospheric temperature and water content, contribute to improved estimates of the intermediate wavelength gravity field, map ionospheric structure, and provide the first satellite-based tests of the ability to observe GPS signals reflected from the ocean surface for possible altimetry and scatterometry applications. NASA also will launch the satellite, currently scheduled for a Delta rocket, in May 1999.

-more-

Mr. Goldin and Dr. Varotto signed the Spanish text of the SAC-C MOU. The English text of the MOU was signed at NASA Headquarters on Oct. 28, 1996.

SAC-A will be launched as a hitchhiker payload from the Space Shuttle cargo bay in 1998 on the STS-88 mission, which also is the first Space Station assembly mission. The small Argentine-built satellite will test several new space technologies for the Argentine and U.S. space programs. A NASA-provided differential global positioning system (DGPS) will provide real-time autonomous attitude measurements for the satellite, ultimately simplifying the amount of ground processing required to control an orbiting satellite. Argentina will provide a Charge Coupled Device (CCD) camera to perform digital space photography, silicon solar cells that will be performance-tested on SAC-A, and a magnetometer to take scalar measurements of the Earth's magnetic field. Finally, SAC-A will test an Argentinean experiment to track endangered whale population migrations in the southern hemisphere.

The signing of these agreements reflects the continued growth and importance of civil space cooperation between NASA and CONAE. Argentina opened the doors to a partnership in civil space with the establishment of CONAE in 1991. NASA and CONAE soon signed a framework agreement, and the level of cooperation between the two agencies has increased significantly since then. In addition to SAC-C and SAC-A, the two programs are now cooperating on ozone investigations and protein crystallography investigations aboard the Space Shuttle.

-end-

NewsRelease

National Aeronautics and
Space Administration

Washington, D.C. 20546
(202) 358-1600

For Release

Beth Schmid
Headquarters, Washington, DC
(Phone: 202/358-1600)

October 20, 1997

NOTE TO EDITORS: N97-74

NASA JOINS CRUSADE FOR WOMEN'S HEALTH

On Thursday, Oct. 23, two Capitol Hill events will highlight NASA's ongoing commitment to improve women's health.

NASA/HEALTH AND HUMAN SERVICES JOIN FORCES TO FIGHT WOMEN'S ILLNESSES

An agreement that enlists NASA technologies to fight breast cancer and other women's illnesses will be signed at 11 a.m. EDT in Room 340, Cannon House Office Bldg., Washington, DC, by representatives of NASA and the Department of Health and Human Services. The signing will be open to the media.

U.S. Representative Anna Eshoo (D-CA), NASA Administrator Daniel S. Goldin, NASA Ames Research Center Director Dr. Henry McDonald and Dr. Susan Blumenthal, Assistant Surgeon General and Deputy Assistant Secretary for Women's Health at HHS are expected to attend the ceremony.

The agreement establishes a cooperative framework between NASA's Ames Research Center, Moffett Field, CA, and the HHS Office on Women's Health to identify, develop and transfer NASA technologies to benefit women's health. Major areas of concern are cancer, reproductive health, pregnancy, osteoporosis and education. Breast cancer is the leading cause of death of women ages 35 to 50 in the United States, and more than 500,000 breast biopsies are done each year in the U.S.

Examples of NASA medical inventions from the Ames Research Center will be on display following the signing ceremony. The robotic brain operator, a computerized apparatus designed to make brain surgery safer, will be demonstrated by Dr. Robert Mah of Ames.

FOR ADDITIONAL INFORMATION ON THIS ACTIVITY, PLEASE CONTACT:

Don Nolan-Proxmire
NASA Headquarters, Washington, DC
(Phone: 202/358-1983)

Jacci Duncan
PHSOWA
Washington, DC (Phone: 202/690-7650)

-more-

NASA DISCUSSES SPACE TECHNOLOGY USED TO FIGHT BREAST CANCER

NASA Administrator Daniel S. Goldin will be the keynote speaker at a luncheon sponsored by the Congressional Caucus on Women's Issues discussing "Space Technology Contributions to Breast Cancer Research" at noon EDT, in Room HC-5 of the Capitol Building. The event is open to the media.

Co-Chair of the Congressional Caucus on Women's Issues, Representative Nancy Johnson (R-CT); Chair of the House Cancer Working Group, Representative Rick Lazio (R-NY); and Representatives Connie Morella (R-MD); Anna Eschoo (D-CA); Mary Landrieu (D-LA); and Senator Connie Mack (R-FL) and his wife, Priscilla, also will speak during the luncheon.

Administrator Goldin will discuss several NASA research and technology programs that are helping scientists and doctors understand, diagnose and treat breast cancer.

NASA astronaut Mary Ellen Weber, Ph.D., will be available to discuss how NASA research in space to assemble and grow human tissue is helping researchers to understand cancer and how the human immune system responds to it.

Dr. Carolyn Krebs, of NASA's Goddard Space Flight Center, will be available to discuss how technology allowing the Hubble Space Telescope to map distant stars is being used in doctor's offices today to easily detect tiny spots in breast tissue, using a needle for biopsy rather than surgery.

Invited guests include leaders of key health and women's groups, Administration officials and members of the U.S. Congress.

FOR ADDITONAL INFORMATION ON THIS ACTIVITY, PLEASE CONTACT:

Terri Hudkins
NASA Headquarters, Washington, DC
(Phone: 202/358-1977)

-end-

News Release

National Aeronautics and
Space Administration

Washington, DC 20546
(202) 358-1600

Donald Savage
Headquarters, Washington, DC
(Phone: 202/358-1547)

For Release

October 20, 1997

RELEASE: 97-239

CORRECTION TO RELEASE 97-235: NASA SELECTS TWO SMALL EXPLORER MISSIONS AND ONE MISSION OF OPPORTUNITY FOR DEVELOPMENT

In the subject release, the last sentence in the first paragraph should read:

"Also selected was a mission of opportunity, which will provide stereo imaging of the Earth's magnetosphere."

The two Small Explorer missions and the alternate will be launched aboard a U.S. expendable launch vehicle to be selected under the Small Expendable Launch Vehicles Services contract, yet to be awarded. Also, the Principal Investigator of the Broadband Observatory for Localization of Transients (BOLT) mission is Dr. Charles Hailey of Columbia University, New York City.

- end -

News Release

National Aeronautics and
Space Administration

Washington, DC 20546
(202) 358-1600

For Release

October 20, 1997

Douglas Isbell
Headquarters, Washington, DC
(Phone: 202/358-1753)

RELEASE: 97-240

MISSIONS TO GATHER SOLAR WIND SAMPLES AND TOUR THREE COMETS SELECTED AS NEXT DISCOVERY PROGRAM FLIGHTS

A mission to gather samples of the wind flowing from the Sun and a mission to fly by three near-Earth comets have been selected as the next flights in NASA's Discovery Program of lower-cost, highly focused scientific spacecraft.

The Genesis mission is designed to collect samples of the charged particles in the solar wind and return them to Earth laboratories for detailed analysis. It is led by Dr. Donald Burnett from the California Institute of Technology, Pasadena, CA, at a total cost to NASA of $216 million. Due for launch in January 2001, it will return the samples of isotopes of oxygen, nitrogen, the noble gases, and other elements to an airborne capture in the Utah desert in August 2003. Such data are crucial for improving theories about the origin of the Sun and the planets, which formed from the same primordial dust cloud.

The Comet Nucleus Tour (CONTOUR) will take images and comparative spectral maps of at least three comet nuclei and analyze the dust flowing from them. CONTOUR is led by Dr. Joseph Veverka of Cornell University, Ithaca, NY, at a total cost to NASA of $154 million. It is scheduled for launch in July 2002, with its first comet flyby to occur in November 2003. This flyby of Comet Encke at a distance of about 60 miles (100 kilometers) will be followed by similar encounters with Comet Schwassmann-Wachmann-3 in June 2006 and Comet d'Arrest in August 2008.

"This was a very difficult selection, given the first-class science proposed by all five teams," said Dr. Wesley Huntress, Associate Administrator for Space Science at NASA Headquarters, Washington. "We picked two based on our distribution of resources and the excellent fit of the timetables for these missions with other robotic space science explorers. Genesis will give us a sample of the Sun as we are preparing to receive samples of a comet and asteroid from other missions. Meanwhile, CONTOUR will help us better understand the breadth of the 'family' of comets, which are believed to be quite individual in their properties."

-more-

The selection of these missions is the second step of a two-step process. In the first step, NASA selected five proposals in April 1997 for detailed four-month feasibility studies. Funded by NASA at $350,000 each, these studies focused on cost, management and technical plans, including small business involvement and educational outreach.

The selected proposals were among 34 proposals originally submitted to NASA in December 1996, in response to a Discovery Announcement of Opportunity (AO) issued on September 20, 1996. As stated in the AO, the initial cost estimates were allowed to grow by a maximum of 20 percent between the April selection and the detailed final proposals.

The investigations proposed in response to this announcement (AO-96-OSS-02) were required to address the goals and objectives of the Office of Space Science's Solar System Exploration theme or the search for extrasolar planetary systems element of the Astronomical Search for Origins and Planetary Systems theme. A selected mission was required to be ready for launch no later than September 30, 2002, within the Discovery Program's cost cap of $280 million total per mission, including development, launch and operations.

CONTOUR and Genesis follow four previously selected NASA Discovery missions. The Near Earth Asteroid Rendezvous (NEAR) spacecraft was launched in February 1996 and returned sharp images of the asteroid Mathilde from a distant flyby in June of this year, on its way to orbit the asteroid Eros in early 1999. The Mars Pathfinder lander, carrying a small robotic rover named Sojourner, landed successfully on the surface of Mars on July 4, and since has returned hundreds of images and thousands of measurements of the Martian environment.

The Lunar Prospector orbiter mission to map the Moon's composition and gravity field is scheduled for launch in January 1998, and the Stardust mission is designed to gather dust from Comet Wild-2 in 2004 and return it to Earth, following a planned February 1999 launch.

-end-

News Release

National Aeronautics and
Space Administration

Washington, DC 20546
(202) 358-1600

Beth Schmid
Headquarters, Washington, DC
(Phone: 202/358-1760)

For Release

October 21, 1997

RELEASE: 97-241

COOPER TO RETIRE FROM NASA

Benita A. Cooper, Associate Administrator for Management Systems and Facilities, has announced her retirement from NASA effective Oct. 31, 1997.

Cooper was responsible for Agency oversight of facilities and maintenance, logistics, aircraft management, security, environmental management, information systems, internal controls and audit liaison.

For the past six years she has been a key member of the NASA Senior Management team that has forged the new strategic plan and management system for the Agency. She has provided institutional and functional leadership which has enabled the Agency to leverage its limited resources and re-engineer its processes.

Before assuming her current job, Cooper was the Assistant Administrator for the Office of Headquarters Operations, which was established in May 1988. Previously, she had worked as Director of Management Operations at the Goddard Space Flight Center, Greenbelt, MD, with responsibility for providing administrative and institutional management support.

Cooper joined NASA Headquarters in 1968 and subsequently became the Director of Personnel at Goddard in 1973. She served as the Assistant Executive Officer to the NASA Deputy Administrator at Headquarters for two years and returned again to Goddard in 1979 as the Deputy Director of Administration.

Cooper's NASA career has been recognized with the Goddard Exceptional Performance Award, distinguished NASA Medals for Outstanding Leadership in 1984 and 1995 and an Exceptional Service Medal in 1991. In October 1989 and 1994 she received the rank of Meritorious Executive in the Senior Executive Service, and in 1995 she received the Rank of Distinguished Executive.

-end-

News Release

National Aeronautics and
Space Administration

Washington, DC 20546
(202) 358-1600

Douglas Isbell
Headquarters, Washington, DC
(Phone: 202/358-1753)

For Release
October 22, 1997

Elizabeth Carter
Ames Research Center, Moffett Field, CA
(Phone: 650/604-2742)

RELEASE: 97-242

LAUNCH OF LUNAR PROSPECTOR RESCHEDULED FOR EARLY JANUARY

The launch of the Lunar Prospector mission to explore the Moon has been rescheduled for Jan. 5, 1998, NASA officials announced today.

The schedule adjustment is necessary to allow adequate time to complete the rigorous testing, review and preparation of the new Lockheed Martin Athena II launch vehicle (formerly known as the LMLV-2). The previous launch date was Nov. 23, 1997.

A free-flier, Lunar Prospector will orbit above the Moon's surface at an altitude of approximately 63 miles during a one-year mission. Its five science instruments will provide detailed data on the composition and structure of the entire lunar landscape, of which more than 75 percent remains virtually unexplored. A key mission objective is to provide direct evidence of the presence or absence of ice in the shaded lunar polar regions.

Lunar Prospector is the third flight in NASA's Discovery Program series of "faster, better, cheaper" space science missions. The entire mission, including the spacecraft, launch vehicle, science instruments, and data operations and delivery, will be conducted at a total cost to NASA of $62.8 million.

The Lunar Prospector mission is being managed by NASA's Ames Research Center, Moffett Field, CA, via a prime contract with Lockheed Martin Corp., Sunnyvale, CA. The Athena II launch vehicle is being provided by Lockheed Martin Astronautics, Denver, CO, as part of the prime contract.

The launch is scheduled to take place at 8:32 p.m., EST on Jan. 5, 1998, from the new Spaceport Florida Authority Launch Complex 46 in Cape Canaveral, FL. A second, back-up launch window is available approximately 24 hours later on Jan. 6.

Further information on the Lunar Prospector mission, including related images, is available on the Internet at URL: http://lunar.arc.nasa.gov/

- end -

NewsRelease

National Aeronautics and
Space Administration

Washington, D.C. 20546
(202) 358-1600

For Release

Beth Schmid
Headquarters, Washington, DC
(Phone: 202/358-1760)

October 22, 1997

RELEASE: 97-243

HOLCOMB NAMED NASA CHIEF INFORMATION OFFICER

Lee B. Holcomb has been named Chief Information Officer (CIO) at NASA Headquarters, Washington, DC, effective immediately. Holcomb will succeed Ronald S. West, who retired earlier this year.

The CIO reports directly to the NASA Administrator and is responsible as an integrated Agency focus for the development of information resource management strategies, policies, and practices. These encompass strategic planning; standards in computing, networking, and security; establishment of system and information architectures; and incorporation of life-cycle management concepts into information technology acquisitions and management. In addition, the CIO serves as the NASA-designated senior official for information resource management. Holcomb also will continue to represent NASA on the Committee on Computers, Information and Communications of the National Science & Technology Council.

For the past six months, Holcomb has served as Director for Information Technology Strategy, responsible for the oversight and direction of information technology programs in support of the advancement of NASA's aeronautics and space transportation enterprise and the enhancement of the United States' aerospace industrial base. He also served as the Chief Information Officer for Aeronautics.

From 1995 to 1997, Holcomb was the Director of the Aviation Systems Technology Division; from 1991-1995, Director of the High Performance Computing & Communications Office; and from 1984 to 1991, Director of the Information Sciences and Human Factors Division, all in the Headquarters Office of Aeronautics. Holcomb began his career in Aeronautics at NASA Headquarters in 1975.

Significant programmatic accomplishments for which he has been directly involved include the development and operation of the world's first massively parallel processing computer; the development of a real-time synthetic aperture radar processor for the Magellan spacecraft; the development and application of information technology tools for support of the operational commanding of planetary spacecraft (Voyager), the Space Shuttle, and air traffic control systems; and Internet-based sites for access to aeronautics and space data and K-12 education products.

-more-

Prior to joining NASA, Holcomb served as a senior engineer with the Jet Propulsion Laboratory, Pasadena, CA, where he was responsible for directing Voyager spacecraft hardware development and numerous systems analysis tasks.

Holcomb holds a B.S. from the University of California at Los Angeles and an M.S. from the California Institute of Technology.

Holcomb is married to Jacqueline Maeder. They have one daughter and reside in Fairfax Station, VA.

-end-

Video Advisory

National Aeronautics and
Space Administration

Washington, DC 20546
(202) 358-1600

For Release
Oct. 24, 1997

Renee Juhans
Headquarters, Washington, DC
(Phone: 202/358-1712)

VIDEO ADVISORY: V97-106

RADARSAT: WELCOME TO THE FRIGID ZONE

Today's video package features images from the first complete high-resolution radar survey of Antarctica, using the Canadian Space Agency's Radarsat. The pictures show better-than-expected details of Antarctica's massive ice streams and crevices, as well as old, buried features of the international research station established at the South Pole in the late 1950s.

ITEM 1: NEW VIEWS OF THE ANTARCTIC
ITEM 1a: INTERVIEW - DR. KENNETH C. JEZEK, DIRECTOR, BYRD POLAR RESEARCH CENTER, OHIO STATE UNIVERSITY
For more information contact Wade Sisler at (301) 286-6256.
ITEM 2: REPLAY - GATHERING SOLAR WIND
ITEM 3: REPLAY - VIRTUAL RECONSTRUCTION
ITEM 3a: REPLAY - INTERVIEW - DR. MURIEL ROSS, DIRECTOR, BIOCOMPUTER CENTER, AMES RESEARCH CENTER
ITEM 3b: REPLAY - INTERVIEW - DR. STEPHEN SCHENDEL, STANFORD UNIVERSITY
ITEM 4: REPLAY - TELEMAMMOGRAPHY
ITEM 4a: REPLAY - INTERVIEW - DR. WILLIAM CHILCOTE, CLEVELAND CLINIC FOUNDATION
ITEM 5: REPLAY - CCD X-RAY MAMMOGRAPHY
ITEM 6: REPLAY - WAR AGAINST BREAST CANCER
ITEM 6a: REPLAY - INTERVIEW - DR. DAVID LECKRONE, HST SENIOR PROJECT SCIENTIST
ITEM 6b: REPLAY - INTERVIEW - DR. WENDI BERG, CHIEF, BREAST SURGERY, UNIVERSITY OF MARYLAND MEDICAL SYSTEM
ITEM 6c: REPLAY - INTERVIEW - PATIENT
ITEM 7: REPLAY - PROBING TOFU
ITEM 7a: REPLAY - INTERVIEW - DR. RUSSELL ANDREWS, NEUROSURGEON, STANFORD MEDICAL CENTER
ITEM 7b: REPLAY - INTERVIEW - DR. ROBERT MAH, NEURAL ENGINEER GROUP
ITEM 8: REPLAY - BONE SHAKING RESEARCH
ITEM 8a: REPLAY - INTERVIEW - DR. GREGORY BELT, RESEARCH ENGINEER, AMES RESEARCH CENTER
ITEM 8b: REPLAY - INTERVIEW - DR. ROBERT WHALEN, RESEARCH SCIENTIST, AMES RESEARCH CENTER
ITEM 9: REPLAY- 3-D EL NIÑO ANIMATION

Video news file today at noon, 3, 6, 9 p.m. and midnight EDT.

NASA Television is available on GE-2, transponder 9C at 85 degrees West longitude, with vertical polarization. Frequency is on 3880.0 megahertz, with audio on 6.8 megahertz.

NewsRelease

National Aeronautics and
Space Administration

Washington, D.C. 20546
(202) 358-1600

For Release

Debra Rahn
Headquarters, Washington, DC
(Phone: 202/358-1639)

October 27, 1997

Eileen M. Hawley
Johnson Space Center, Houston, TX
(Phone: 281/483-5111)

NOTE TO EDITORS: N97-75

FOALE TO DISCUSS MIR MISSION

Astronaut Michael Foale, who recently returned from his 145-day stay in space, will discuss his journey during a news conference Wednesday, Oct. 29 at 10 a.m. EST.

The press conference will originate from the Johnson Space Center, Houston, and will be broadcast on NASA Television, providing multi-center question and answer capability for reporters at participating NASA centers. Due to Foale's post-flight schedule requirements, he may not be available for additional interview opportunities in the near future.

During his 134 days as a crew member aboard the Russian Mir space station, Foale traveled more than 58 million miles. Foale was launched in May as a crew member on STS-84, which delivered him to the Mir on May 17, and he returned on STS-86 on Oct. 6.

Foale's press conference can be seen on NASA Television, which is carried on GE-2, Transponder 9C, at 85 degrees West longitude, frequency 3880 Mhz, audio 6.8 Mhz.

Media planning to attend the briefing at the Johnson Space Center should contact the newsroom by 4 p.m. CST on Oct. 27 for accreditation.

-end-

Video Advisory

National Aeronautics and
Space Administration

Washington, DC 20546
(202) 358-1600

For Release
Oct. 28, 1997

Renee Juhans
Headquarters, Washington, DC
(Phone: 202/358-1712)

VIDEO ADVISORY: V97-107

MICROWAVING EL NIÑO IN THE PACIFIC

Today's video package features animation of humidity levels in the upper atmosphere measured by the Microwave Limb Sounder (MLS) onboard NASA's Upper Atmosphere Research Satellite (UARS). The data provides scientists with more convincing information that the El Niño condition is established in the Pacific Ocean.

ITEM 1: **EL NIÑO IN THE PACIFIC**
Animation of water vapor in the upper atmosphere.

For more information contact Stephanie Zeluck at (818) 354-5011.

ITEM 2: **REPLAY- 3-D EL NIÑO ANIMATION**

· Video news file today at noon, 3, 6, 9 p.m. and midnight EDT.

NASA Television is available on GE-2, transponder 9C at 85 degrees West longitude, with vertical polarization. Frequency is on 3880.0 megahertz, with audio on 6.8 megahertz.

-end-

NewsRelease

National Aeronautics and
Space Administration

Washington, D.C. 20546
(202) 358-1600

For Release

October 29, 1997

Don Savage
Headquarters, Washington, DC
(Phone: 202/358-1547)

Tammy Jones
Goddard Space Flight Center, Greenbelt, MD
(Phone: 301/286-5566)

Donna Weaver
Space Telescope Science Institute, Baltimore, MD
(Phone: 410/338-4493)

RELEASE: 97-246

HUBBLE CATCHES UP WITH A BLUE STRAGGLER STAR

Astronomers have long been mystified by observations of a few hot, bright, apparently young stars residing in well-established neighborhoods where most of their neighbors are much older.

With the help of NASA's Hubble Space Telescope, astronomers now have evidence that may eventually help solve the 45-year-old mystery of how these enigmatic stars, called blue stragglers, were formed. For the first time, astronomers have confirmed that a blue straggler in the core of a globular cluster (a very dense community of stars) is a massive, rapidly rotating star that is spinning 75 times faster than the Sun. This finding provides proof that blue stragglers are created by collisions or other close encounters in an overcrowded cluster core.

Astronomers studied a blue straggler in the tumultuous heart of the nearby globular cluster 47 Tucanae (47 Tuc), located 15,000 light-years away in the southern constellation Tucana. The observation was made by astronomers Michael M. Shara of the Space Telescope Science Institute, Baltimore, MD; Rex A. Saffer of Villanova University, Villanova, PA; and Mario Livio, also of the Institute. Their analysis will appear in the Nov. 1 issue of the Astrophysical Journal Letters.

"This is an extremely exciting result," Saffer said, "because it may help distinguish between competing theories of blue straggler star formation and evolution."

- more -

"Since their discovery 45 years ago, blue stragglers have been assumed to be stars much like the Sun, although their bluer color and greater brightness imply that they are more massive and much younger than normal globular cluster stars. Our analysis confirms that, but without having to make any assumptions about the state of blue straggler star evolution," Saffer said.

Using Hubble's Faint Object Spectrograph (removed during the Second Servicing Mission in February), the astronomers analyzed the spectrum of one blue straggler, measuring its temperature, diameter, and rotation rate. The team then combined these measurements with the blue straggler's apparent brightness, taken from a Hubble Telescope Wide Field and Planetary Camera archival image, to obtain the star's mass. The astronomers report the derived temperature and mass are consistent with the characteristics of a normal star with a mass about 1.7 times that of the Sun. However, the star is spinning at least two to three times faster than stars of its kind.

Astronomers now believe that blue stragglers are created by the merger of two low-mass stars. But they have two different views of how these stars interact to create blue stragglers. One merger theory proposes that a violent collision of two unrelated stars creates a blue straggler. Another hypothesizes that a slow coalescence of a gravitationally bound pair creates the straggler star.

Based on their analysis of the blue straggler in 47 Tuc, the team favors the slower, gentler merger scenario between binary stars. In double-star systems where the stars are close enough to touch each other, the more massive star can cannibalize its partner, producing a single, even more massive star. This process, astronomers believe, more likely results in a rapidly spinning merger product where the fast orbital motions of the binary star produces the rapid spin of the consolidated pair.

The second merger scenario involves a collision between two unrelated stars, which run into each other by chance in the dense star cluster core.

"It's a bit like a head-on wreck between two tractor trailers," Saffer explained, "where the enormous energy carried by the fast-moving stars is deposited in the debris from the collision."

Saffer credits the Hubble telescope's superior spatial resolution with being able to peer into a swirling mix of stars to capture a blue straggler in the cluster core.

"While some blue stragglers are found in globular cluster outskirts, in 47 Tuc the blue stragglers are only found in the cluster core," Saffer said. "The crowding of the stars there is too severe for the current generation of ground-based telescopes to resolve them."

- more -

Globular clusters contain up to 1 million stars packed into a swarm only about 20 light-years in diameter. They also are among the oldest stellar systems in the Milky Way Galaxy. Stars speeding through the extremely crowded cluster core are far more likely to collide or pass near each other than stars in the sparse neighborhood of the Sun. These processes can produce a zoo of stellar animals, such as X-ray binaries, pulsars, blue stragglers, and other exotic species, all of which have actually been observed in globular cluster cores.

The Space Telescope Science Institute is operated by the Association of Universities for Research in Astronomy, Inc., for NASA, under contract with the Goddard Space Flight Center, Greenbelt, MD. The Hubble Space Telescope is a project of international cooperation between NASA and the European Space Agency.

- end -

NOTE TO EDITORS: A photo and caption are available via the World Wide Web at http://oposite.stsci.edu/pubinfo/PR/97/35.html and via links in http://oposite.stsci.edu/pubinfo/Latest.html or http://oposite.stsci.edu/pubinfo/Pictures.html.

Images are available via the World Wide Web at URL:

http://oposite.stsci.edu/pubinfo/gif/bss19.gif (GIF),
http://oposite.stsci.edu/pubinfo/jpeg/bss19.jpg (JPEG).

Image files also may be accessed via anonymous ftp from oposite.stsci.edu in /pubinfo: gif/bss19.gif (GIF) and jpeg/bss19.jpg (JPEG). Higher resolution digital versions (300 dpi JPEG) of the release photograph are available in /pubinfo/hrtemp: 97-35.jpg (color) and 97-35bw.jpg (black & white). Full resolution TIFF images are available in /pubinfo/tiff/1997/35a.tif and 35b.tif.

News Release

National Aeronautics and
Space Administration
Washington, DC 20546
(202) 358-1600

Michael Braukus
Headquarters, Washington, DC
(Phone: 202/358-1778)

Dave Drachlis
Marshall Space Flight Center, Huntsville, AL
(Phone: 205/544-0034)

For Release
October 28, 1997

RELEASE 97-247

MARSHALL CENTER DIRECTOR DR. WAYNE LITTLES TO RETIRE

Dr. Wayne Littles, director of the Marshall Space Flight Center, Huntsville, AL, has announced that he will retire from NASA on Jan. 3, 1998. NASA is proceeding with the search for a successor.

In Feb. 1996, Dr. Littles was named the eighth director of the Marshall Center, NASA's lead center for space transportation systems development and microgravity research, and NASA's center of excellence for propulsion.

"Wayne Littles has been one of NASA's brightest stars," NASA Administrator Daniel S. Goldin said. "Through his leadership, the Marshall center has excelled in all its projects. He has helped the agency meet the challenges of the next millennium. Wayne will be missed."

Dr. Littles joined NASA and Marshall in 1967, moving rapidly through its ranks. He served as director of Marshall's Science and Engineering Directorate and was named deputy director of Marshall in 1989. In 1994, Dr. Littles was assigned to NASA Headquarters, Washington, DC, as NASA's Chief Engineer. Later that year he was named NASA Associate Administrator for Space Flight, directing the planning, development and operation of the Space Shuttle, Spacelab and Space Station programs.

Among his numerous awards, Dr. Littles twice received the Presidential Rank of Distinguished Executive, most recently from President Clinton earlier this year.

He characterized his decision to retire as "the toughest of my professional career." But, he added, "It is the right time."

- end -

Contract Announcement

National Aeronautics and
Space Administration

Washington, DC 20546
(202) 358-1600

For Release

October 30, 1997

Debra Rahn
Headquarters, Washington, DC
(Phone: 202/358-1639)

Joel Wells
Kennedy Space Center, FL
(Phone: 407/867-2468)

RELEASE: C97-s

KSC EXTENDS CURRENT BASE OPERATIONS CONTRACT

NASA procurement officials plan to exercise an option to extend the performance period of the Kennedy Space Center (KSC), FL, Base Operations Contract (BOC). The action is effective Nov. 1, 1997 through Sept. 30, 1998, with an estimated value of $147 million.

The option's original performance period was for two years through Oct. 31, 1999, but, in order to accommodate the anticipated award of the Joint Base Operations Support Contract (JBOSC) slated for award by Oct. 1, 1998, it will be shortened to eleven months.

The JBOSC is a joint procurement effort between NASA and the Air Force 45th Space Wing to provide unified base support services for KSC, Cape Canaveral Air Station, and Patrick Air Force Base.

EG&G Florida, Inc. of Cape Canaveral, FL, has been KSC's base operations contractor since 1983, providing management, operation, maintenance and engineering for KSC utilities, facilities, health, fire, security services and some technical operations. Their current contract was effective Nov. 1, 1993, and has a base period of performance through Oct. 31, 1997. The exercising of this option is within the provisions of the existing contract.

-end-

Internet Advisory

National Aeronautics and
Space Administration
Washington, DC 20546
(202) 358-1600

For Release

Ray Castillo
Headquarters, Washington, DC
(Phone: 202/358-4555)

October 30, 1997

INTERNET ADVISORY: I97-10

NASA RELEASES FOURTH STRATEGIC PLAN

NASA has released the fourth installment of its yearly strategic plan with a new twist. This year's plan is the first to comply with the Government Performance and Results Act.

Building on such past successes as the Mars Pathfinder landing and the Hubble Space Telescope missions, NASA's strategic plan shows a renewed focus on scientific research and the development and application of new cutting-edge technologies.

"With the 1998 edition of the strategic plan, NASA is focused on the near-term goals and has a blueprint for the future," said NASA Associate Administrator for Policy and Plans Alan Ladwig. "The strategic plan aligns our goals with national policy and our budget, providing an efficient tool with which to manage NASA's programs."

This year's strategic plan builds on the three previous editions, is in compliance with the Government Performance and Results Act, and has been submitted to the Administration with NASA's Fiscal Year 1999 budget request. The Government Performance and Results Act directs that agencies develop a customer-focused strategic plan, align agency activities with concrete missions and goals, manage and measure results to justify appropriations and authorizations, and design budgets that reflect strategic missions.

Copies of the new strategic plan are available on the web at the following URL:
http://www.hq.nasa.gov/office/nsp/

Older strategic plans can be found at URL:
http://www.hq.nasa.gov/office/codez/plans.html

Other information regarding NASA's strategic planning can be found at URL:
http://www.hq.nasa.gov/office/codez/

-end-

Video Advisory

National Aeronautics and
Space Administration

Washington, DC 20546
(202) 358-1600

For Release
Oct. 30, 1997

Renee Juhans
Headquarters, Washington, DC
(Phone: 202/358-1712)

VIDEO ADVISORY: V97-108

MARS GLOBAL SURVEYOR TAKES PIX OF GIANT MARTIAN VOLCANO; VIRTUAL FLYING FROM A DISTANCE

Today's video package features an image of the 15-mile high volcano Olympus Mons, taken by NASA's Mars Global Surveyor on 10/20/97. Olympus Mons is the largest of the major volcanoes, that stretches nearly 340 miles east-west. Also on NTV is footage of a NASA computer-generated virtual laboratory, located at NASA's Ames Research Center, that allows researchers anywhere in the world to study potentially dangerous aircraft and spacecraft situations without risking human life.

ITEM 1: GIANT MARTIAN VOLCANO

Image shows the Martian volcano that is nearly three times as high as Mount Everest.

For more information contact Doug Isbell at (202) 358-1753.

ITEM 2: VIRTUAL LABORATORY

Footage on laboratory.

ITEM 2b: INTERVIEW - JULIE MIKULA, MANAGER SIMULATION RESEARCH, AMES RESEARCH CENTER

For more information contact Don Nolan-Proxmire at (202) 358-1983 or John Bluck at (650) 604-5026.

Video news file today at noon, 3, 6, 9 p.m. and midnight EDT.

NASA Television is available on GE-2, transponder 9C at 85 degrees West longitude, with vertical polarization. Frequency is on 3880.0 megahertz, with audio on 6.8 megahertz.

-end-

News Release

National Aeronautics and
Space Administration

Washington, DC 20546
(202) 358-1600

For Release

October 30, 1997

Dwayne Brown
Headquarters, Washington, DC
(Phone: 202/358-1726)

John Bluck
Ames Research Center, Moffett Field, CA
(Phone: 415/604-5026)

RELEASE: 97-248

NASA "VIRTUAL LABORATORY" EXPANDS RESEARCH IN AEROSPACE SAFETY

Astronauts and engineers have successfully concluded tests on a computer-generated virtual laboratory that will allow researchers -- located anywhere in the world -- to study potentially dangerous aircraft and spacecraft situations without risking human life.

In the past, pilots, aerospace engineers and scientists who were directly involved in tests had to be physically present in a building that houses the world's largest flight simulator at NASA's Ames Research Center, Moffett Field, CA.

"The lab can enable research organizations and many other parties to collaborate long-distance for the first time," said the lab's project manager, Tom Alderete. "It could also be used by universities, research laboratories and industry to develop a wide variety of products beyond the aerospace field," he said.

Ames' simulator is able to move airplane and spaceship cockpits in all directions, including 60 feet vertically and 40 feet horizontally. There are five interchangeable cockpits that are used to simulate the Space Shuttle, helicopters, airplanes and other aerospace vehicles.

Researchers study aerospace controls, guidance, cockpit displays, automation and handling qualities of existing or proposed aircraft or other vehicles. The simulator creates a convincing environment for a pilot and is controlled by computers programmed to represent each aircraft.

-more-

Computers calculate correct aircraft response when a pilot changes simulator cockpit controls. In real time, responses by the simulator include cockpit motion, images in the windshield, sounds and control readouts. Simulations are monitored from control labs at Ames.

"From a place miles away, you can use the hand controller to 'walk around' a three-dimensional, computerized world that represents our test facilities here at Ames. You can even move into the cockpit," said Julie Mikula, of Ames' simulations operations branch.

"A teleresearcher can see a computer animation of the cockpit's motion and can even view what the pilot sees out of the cockpit," she added. Any kind of a vehicle -- a car, boat, plane, train, or spaceship -- can be simulated and "recreated" practically any place around the world, said Mikula.

The virtual laboratory's data communications are enabled by the NASA Research and Education Network. According to the network's project manager, Christine Falsetti, "Experience with real time computer files that the virtual lab uses also helps us learn how to better use computer networks to help do research in the future." The virtual laboratory and the "world" it creates exists partly in computer memory and other physical gear.

In June, astronauts made simulated Space Shuttle landings using a huge motion simulator at Ames while NASA engineers in Houston monitored the sessions using the three-dimensional "world" that includes video screens, computer video, two-way video conferencing, shared whiteboards, remote data access and even a pilot's out-the-window scene.

Future uses of the laboratory also being considered include design of new spacecraft and training for astronauts.

-end-

News Release

National Aeronautics and
Space Administration

Washington, DC 20546
(202) 358-1600

For Release

October 30, 1997

Don Savage
Headquarters, Washington, DC
(Phone: 202/358-1547)

Diane Ainsworth
Jet Propulsion Laboratory, Pasadena, CA
(Phone: 818/354-5011)

RELEASE: 97-249

MARS GLOBAL SURVEYOR TO RESUME AEROBRAKING

After a two-week hiatus, NASA's Mars Global Surveyor (MGS) flight team will resume lowering the spacecraft's orbit around Mars beginning Nov. 7. The effort will proceed at a more gradual pace than before, which will extend the mission's aerobraking phase by several months, and will change Global Surveyor's final science mapping orbit.

The decision to resume aerobraking came after intensive engineering analysis, computer simulations and tests with representative hardware to characterize the current condition of one of the spacecraft's two solar panels, which began to flex more than expected during the spacecraft's lowest dip into the Martian atmosphere on Oct. 6.

Under normal circumstances, the spacecraft's two 11-foot-long (3.5-meter) solar panels should remain fixed and nearly motionless during each aerobraking pass through the upper atmosphere of Mars. One of the panels, which did not fully deploy and latch after launch, moved past its latched position and has shown slight movement during the spacecraft's last three closest approaches to the Martian surface.

"After sufficient time to study the observed motion, we concluded that it is possible to perform additional aerobraking at a slower rate, without putting undue stress on the solar panel in question," said Glenn E. Cunningham, Mars Global Surveyor mission manager at NASA's Jet Propulsion Laboratory (JPL), Pasadena, CA. "This changes Mars Global Surveyor's final mapping orbit, but it should not have a significant impact on the ability of Global Surveyor to accomplish the mission science objectives."

The spacecraft's scientific instruments have performed flawlessly and continue to return new information about Martian magnetic properties, its atmosphere, surface features, temperatures and mineralogy since Mars Global Surveyor entered orbit around the red planet on Sept. 11.

-more-

The spacecraft is currently in a 35-hour elliptical orbit which brings it 107 miles (172 kilometers) above the surface of Mars at its closest approach to the planet. The operations team at JPL and Lockheed Martin Astronautics, Denver, CO, will begin to reduce that orbit using a more moderate level of aerobraking that will slowly bring the spacecraft into the desired nearly circular mapping orbit. Aerobraking, a technique first demonstrated in the summer of 1993 during the final months of the Magellan mission to Venus, allows a spacecraft to lower its orbit without relying on propellant, by using the drag produced by a planet's atmosphere.

"There are several types of desirable orbits for us to consider in the next several weeks that will give us global coverage of the planet and yield all of the science data we expected to return," Cunningham said. "In the meantime, the instruments are performing marvelously, and we will continue gathering new science data as we begin to reduce the spacecraft's altitude and bring it down into the upper Martian atmosphere. Even if we wind up in an elliptical orbit, we will have an opportunity to study Mars at closer range than we originally planned because the spacecraft's periapsis -- or closest passage over Mars -- will be closer than the 234-mile (378-kilometer) circular orbit that was to be its original mapping distance."

The spacecraft's current orbit was raised Oct. 12 after the flight operations team observed that the unlatched solar panel had moved more than 20 degrees and beyond what should have been its fully deployed and latched position. Significant movement was observed on periapsis 15 -- or the 15th closest pass over Mars, which occurred on Oct. 6 -- when the Martian atmosphere had become twice as dense as it had been during previous passes. The thickness of the atmosphere amounted to a 50 percent increase in pressure over what was expected on the spacecraft's solar array.

Although atmospheric variations like these were anticipated as the seasons change on Mars, the spacecraft's orbit was raised by about seven miles (11 kilometers) to adjust the pressure level. Subsequent motion of the panel at periapsis 16 through 18 caused the flight team to raise the orbit further on Oct. 12, taking the spacecraft out of the atmosphere altogether.

"The investigation of the unexpected motion of the unlatched panel led us to identify a secondary source of damage in the yoke, a piece of structure that connects the solar panel to the spacecraft," Cunningham said. "This secondary source of damage was a result of the failure of the damper arm that jammed in the panel's hinge joint shortly after launch, when the solar panels were initially deployed."

Mechanical stress analysis tests suggest that the yoke -- a triangular, aluminum honeycomb material sandwiched between two sheets of graphite epoxy -- probably fractured on one surface. The analysis further suggests that the fractured surface, with increased pressure on the panel during aerobraking, began to pull away from the aluminum honeycomb beneath it.

"Aerobraking will be reinitiated at 0.2 newtons per square meter (0.00003 pounds per square inch), which is about one-third of the original aerobraking level," Cunningham said. "This is a pressure that we currently believe is safe but we will continue to work with ground tests, analysis and close monitoring of in-flight spacecraft data to assure that it is safe."

"Aerobraking will take much longer, perhaps eight to 12 months, at this more gradual rate. In the meantime, we will continue collecting science data and work in the next several weeks toward selection of the best possible orbit to fulfill the science objectives of the mapping mission," Cunningham said.

A new color image from the MGS Mars Orbiter Camera of the giant volcano Olympus Mons is available on the Internet at the following URL: http://barsoom.msss.com/mars/global_surveyor/camera/images/index.html

Additional information about the Mars Global Surveyor mission is available on the World Wide Web by accessing JPL's Mars news site at URL: http://www.jpl.nasa.gov/marsnews or the Global Surveyor project home page at URL: http://mars.jpl.nasa.gov.

Mars Global Surveyor is part of a sustained program of Mars exploration, known as the Mars Surveyor Program. The mission is managed by the Jet Propulsion Laboratory for NASA's Office of Space Science, Washington, DC. JPL's industrial partner is Lockheed Martin Astronautics, Denver, CO, which developed and operates the spacecraft. JPL is a division of the California Institute of Technology, Pasadena, CA.

- end -

News Release

National Aeronautics and
Space Administration

Washington, DC 20546
(202) 358-1600

Donald Savage
Headquarters, Washington, DC
(Phone: 202/358-1547)

For Release
October 31, 1997

Bill Steigerwald
Goddard Space Flight Center, Greenbelt, MD
(Phone: 301/286-5017)

NOTE TO EDITORS: N97-76

NEXT SPACE SCIENCE UPDATE FEATURES SUN'S "MAGNETIC CARPET"

The next Space Science Update (SSU) is scheduled for 1 p.m. EST, Wednesday, Nov. 5, 1997, at NASA Headquarters, Washington, DC . The Update will feature new data from the joint European Space Agency-NASA Solar and Heliospheric Observatory (SOHO) mission. Scientists have found a rapidly changing magnetic carpet covering the solar surface which changes on a time scale of approximately 40 hours.

Panelists will be:

* Dr. Joseph B. Gurman, Deputy U.S. Project Scientist for SOHO mission, NASA Goddard Space Flight Center, Greenbelt, MD;
* Dr. Alan Title, Professor and Co-Director of the Stanford-Lockheed Institute for Space Research, Stanford University, Stanford, CA;
* Dr. Edward Spiegel, the Lewis Morris Rutherford Professor in Astronomy at Columbia University, New York;
* Mandy Hagenaar, astronomer, Utrecht University, the Netherlands, and Stanford-Lockheed Institute for Space Research; and
* Dr. George Withbroe, Science Director for the Sun-Earth Connection program, NASA Headquarters, Washington, DC, is panel moderator.

The SSU will originate from NASA Headquarters Auditorium, 300 E St., S.W., Washington, DC, and will be carried live on NASA TV with two-way question-and-answer capability for reporters covering the event from participating NASA centers.

NASA Television is broadcast on the GE2 satellite which is located on Transponder 9C, at 85 degrees West longitude, frequency 3880.0 Mhz, audio 6.8 MHz. Audio of the broadcast will be available on voice circuit at the Kennedy Space Center on 407/867-1220.

- end -

News Release

National Aeronautics and
Space Administration
Washington, DC 20546
(202) 358-1600

Doug Isbell/Donald Savage
Headquarters, Washington, DC
(Phone: 202/358-1547)

For Release
October 31, 1997

Diane Ainsworth
Jet Propulsion Laboratory , Pasadena, CA
(Phone: 818/354-5011)

NOTE TO EDITORS: N97-77

MARS GLOBAL SURVEYOR AEROBRAKING BRIEFING SET FOR NOV. 10

A press briefing to describe the resumption of aerobraking for NASA's Mars Global Surveyor spacecraft now orbiting the red planet will be held at NASA's Jet Propulsion Laboratory (JPL), Pasadena, CA, on Monday, Nov. 10, at 1 p.m. EST, and will be broadcast live on NASA TV.

Glenn E. Cunningham, Mars Global Surveyor Mission Manager at JPL, will discuss the decision to resume aerobraking.

The briefing will originate from the Television Studio in the von Karman Auditorium at JPL, and will be carried live on NASA TV with two-way question-and-answer capability for reporters covering the event from participating NASA centers.

NASA Television is broadcast on the GE2 satellite which is located on Transponder 9C, at 85 degrees West longitude, frequency 3880.0 Mhz, audio 6.8 MHz. Audio of the broadcast will be available on voice circuit at the Kennedy Space Center on 407/867-1220.

- end -

News Release

National Aeronautics and
Space Administration

Washington, DC 20546
(202) 358-1600

Doug Isbell/Donald Savage
Headquarters, Washington, DC
(Phone: 202/358-1547)

Diane Ainsworth
Jet Propulsion Laboratory, Pasadena, CA
(Phone: 818/354-5011)

For Release
October 31, 1997

NOTE TO EDITORS: N97-78

MARS PATHFINDER MISSION BRIEFING SET FOR NOV. 4

A press briefing to describe the current status and overall results of NASA's historic Mars Pathfinder Mission will be held at NASA's Jet Propulsion Laboratory, Pasadena, CA, at 12:30 p.m. EST, Tuesday, Nov. 4, and will be broadcast live on NASA TV.

Project officials taking part in the briefing will include project manager Brian Muirhead, mission manager Richard Cook, project scientist Dr. Matthew Golombek and supporting scientist Dr. Timothy J. Parker, all of JPL.

The briefing will originate from the Television Studio in the von Karman Auditorium at JPL, and will be carried live on NASA TV with two-way question-and-answer capability for reporters covering the event from participating NASA centers and Headquarters.

NASA Television is broadcast on the GE2 satellite which is located on Transponder 9C, at 85 degrees West longitude, frequency 3880.0 Mhz, audio 6.8 MHz. Audio of the broadcast will be available on voice circuit at the Kennedy Space Center on 407/867-1220.

- end -

News Release

National Aeronautics and
Space Administration

Washington, DC 20546
(202) 358-1600

Douglas Isbell
Headquarters, Washington, DC
(Phone: 202/358-1547)

For Release
October 31, 1997

Allen Kenitzer
Goddard Space Flight Center, Greenbelt, MD
(Phone: 301/286-2806)

Public Relations Office
National Space Development Agency of Japan
(Phone: 81-3-3438-6107)

NOTE TO EDITORS: N97-79

SCIENCE BRIEFING AND LAUNCH COVERAGE SCHEDULED FOR TROPICAL RAINFALL MEASURING MISSION

A prelaunch briefing to discuss the scientific goals of the U.S.-Japanese Tropical Rainfall Measuring Mission (TRMM) will be held at 1 p.m. EST on Thursday, Nov. 6, 1997, in the auditorium at NASA Headquarters, Washington, DC.

The launch of the TRMM satellite aboard a Japanese H-II rocket, is scheduled for Tuesday, Nov. 18. The launch window extends from 3:40 p.m. EST for approximately two-hours daily until Dec. 10, 1997.

Both the science briefing and the liftoff from the Japanese Space Center in Tanegashima, Japan, will be carried live on NASA TV.

In addition to launch services, Japan, which has provided the precipitation radar aboard the spacecraft, will collaborate with NASA on scientific research during the mission. Japan is an important international partner in NASA's Mission to Planet Earth research endeavors.

The first Earth science satellite dedicated to studying the properties of tropical and subtropical rainfall, TRMM carries microwave and visible/infrared sensors, and the first spaceborne rain radar. Tropical rainfall comprises more than two-thirds of global rainfall. More precise information about this rainfall and its variability is crucial to understanding and predicting global climate change.

-more-

The primary objectives of the TRMM mission are to obtain and study multi-year science data sets of tropical and subtropical rainfall measurements; to understand how interactions between the sea, air and land masses produce changes in global rainfall and climate; to improve modeling of tropical rainfall processes and its influence on global atmospheric circulation in order to predict rainfall and variability at various periods of time; and to test, evaluate and improve satellite-based rainfall measurement techniques. One of the science plans of TRMM is to study how El Nino related rainfall anomalies correlate with other oceanic and atmospheric processes.

Scheduled to participate in the science briefing are:

- William Townsend, Acting Associate Administrator, NASA Office of Mission to Planet Earth
- Hideshi Kozawa, Washington Office Director, National Space Development Agency of Japan
- Tom LaVigna, NASA TRMM Project Manager
- Dr. Joanne Simpson, NASA TRMM Project Scientist
- Dr. Chris Kummerow, NASA TRMM Deputy Project Scientist

Facilities will be available at NASA's Goddard Space Flight Center Visitor Center, Greenbelt, MD, for reporters, meteorologists or weather persons who would like to view the launch live. In addition, spokespersons will be available for media interviews prior to and following the launch. Media who plan to attend or who would like photos or printed materials should contact Nancy Neal at 301/286-0039 or -8955 by Nov. 14.

Launch coverage will begin at approximately 2:40 p.m. EST and will continue through liftoff. The post launch news conference will not be carried on NASA TV.

NASA TV is available on GE-2, transponder 9C (C-Band), located at 85 degrees West longitude, vertical polarization with a frequency of 3880 MHz and audio of 6.8 MHz.

The TRMM project is part of NASA's Mission to Planet Earth enterprise, a long-term, coordinated research effort to study the total Earth system and the effects of natural and human-induced changes on the global environment. TRMM is managed by Goddard for NASA's Office of Mission to Planet Earth, Washington, DC.

More information on TRMM is available via the Internet at the following address:

http://trmm.gsfc.nasa.gov

-end-

News Release

National Aeronautics and
Space Administration

Washington, DC 20546
(202) 358-1600

Headquarters, Washington, DC
(Phone: 202/358-1600)

For Release
October 31, 1997

NOTE TO EDITORS: N97-80

NASA's EARLY NOVEMBER NEWS BRIEFINGS

Over the next several weeks, NASA has a busy schedule of news briefings on a number of subjects that are listed below, in chronological order.

Mars Pathfinder -- Tuesday, Nov. 4 at 12:30 p.m. EST from the Jet Propulsion Laboratory, Pasadena, CA. Scientists will discuss the results of attempts to contact Pathfinder and alternate plans of action if communication cannot be reestablished. The contact for further information is Doug Isbell, 202/358-1547. Additional information also can be found on the Web at URL:

ftp://ftp.hq.nasa.gov/pub/pao/note2edt/1997/n97-078.txt

Solar and Heliospheric Observatory (SOHO) -- Wednesday, Nov. 5 at 1 p.m. EST from NASA Headquarters, Washington, DC. Scientists will discuss the new discovery of a rapidly changing magnetic carpet covering the solar surface, which changes on a time scale of approximately 40 hours. The contact for further information is Donald Savage, 202/358-1547. Additional information can be found on the following URL:

ftp://ftp.hq.nasa.gov/pub/pao/note2edt/1997/n97-076.txt

Tropical Rainfall Measuring Mission (TRMM) -- Thursday, Nov. 6 at 1 p.m. EST from NASA Headquarters, Washington, DC. The first Earth science satellite dedicated to studying the properties of tropical and subtropical rainfall, TRMM carries microwave and visible/infrared sensors, and the first spaceborne rain radar. Launch is scheduled for Tuesday, Nov. 18. The contact is Doug Isbell, 202/2358-1547. Additional information can be found at the following URL:

ftp://ftp.hq.nasa.gov/pub/pao/note2edt/1997/n97-079.txt

Mars Global Surveyor (MGS) -- Monday, Nov. 10 at 1 p.m. EST from the Jet Propulsion Laboratory. NASA's MGS flight team will discuss the details of lowering the spacecraft's orbit around Mars set to begin on Nov. 7 and the future plans for the spacecraft. The contact for this event is Doug Isbell, 202/358-1547. Additional information can be found at the following URL:

ftp://ftp.hq.nasa.gov/pub/pao/note2edt/1997/n97-077

-more-

STS-87 Pre-flight briefings -- Wednesday, Nov. 12 from 9 a.m. - 6 p.m. EST from the Johnson Space Center, Houston, TX. Panelists will discuss a variety of flight experiments scheduled for this mission. The contact for the briefings is Debra Rahn, 202/358-1639, or Ed Campion, 281/483-5111. Additional information on the STS-87 briefings will be released at a later date.

The briefings will be carried live on NASA TV with two-way question and answer capability for reporters covering the events from participating NASA centers.

NASA Television is broadcast on the GE2 satellite which is located on Transponder 9C, at 85 degrees West longitude, frequency 3880.0 Mhz, audio 6.8 Mhz.

-end-

News Release

National Aeronautics and
Space Administration
Washington, DC 20546
(202) 358-1600

For Release

October 31, 1997

Jim Cast
Headquarters, Washington, DC
(Phone: 202/358-1779)

Dom Amatore
Marshall Space Flight Center, Huntsville, AL
(Phone: 205/544-0031)

Ron Lindeke
Lockheed Martin Skunk Works, Palmdale, CA
(Phone: 805/572-4153)

RELEASE: 97-250

X-33 PROGRAM SUCCESSFULLY COMPLETES CRITICAL DESIGN REVIEW; MEDIA TELEPHONE CONFERENCE SET FOR 11 A.M. EST MONDAY, NOV. 3

Government and industry representatives today successfully completed a comprehensive design review of the X-33 technology demonstration program, giving the program a vote of confidence and the go ahead for fabrication of all remaining components, completion of subsystems and assembly of the subscale prototype launch vehicle.

"We've had an excellent review of the program, and we're ready to go ahead with all remaining fabrication and assembly for the X-33," said NASA X-33 program manager Gene Austin of NASA's Marshall Space Flight Center, Huntsville, AL.

The five-day operations and systems Critical Design Review (CDR) held this week at Edwards Air Force Base, CA, was the culmination of 51 subsystems and component CDRs held since January. Some 600 representatives from NASA, industry team lead Lockheed Martin, industry partners and the U.S. Air Force participated in this final design review of the X-33 Program. They planned the integration of the various systems and components into the operational vehicle, and finalized plans for the launch, landing and flight support infrastructure.

The review also served as an opportunity for program officials to announce resolution of issues that arose earlier this year regarding vehicle weight and aerodynamic stability and control. Since then the X-33 team's weight reduction efforts, modifications to the design of the vehicle's canted and vertical fins, and plans to use densified propellants to carry additional fuel have paved the way for a successful program, Austin said.

"I'm very pleased with the technical definition of the program," said Cleon Lacefield, Lockheed Martin Skunk Works X-33 program manager. "All the team members have done an outstanding job bringing together all the design elements of the program.

-more-

"We are now ready to focus on vehicle fabrication and launch site construction," Lacefield added. "We are on schedule for the flight demonstration program to begin in mid-1999."

The flagship vehicle in NASA's Space Transportation Technology Enterprise, the X-33 is a subscale prototype of a full-scale, commercially developed Reusable Launch Vehicle (RLV) which Lockheed Martin has named "VentureStar™," planned for development after the turn of the century. A single-stage-to-orbit RLV could dramatically reduce the cost of putting payloads into space from $10,000 per pound to $1,000 per pound.

"Everything we have learned leading up to our Critical Design Review about the development of this prototype vehicle will be directly applied to the design of the full-scale vehicle," Austin said. "We've already earned the price of the X-33 program for what we've learned for the RLV."

The next major milestones for the more than $1 billion X-33 Program are completion of the Environmental Impact Statement process, with the signing of the Record of Decision, and groundbreaking for the launch facility site on the eastern portion of Edwards Air Force Base, both planned for early November. The first arrival of a major vehicle component at the X-33 assembly facility in Palmdale, CA -- the aluminum liquid oxygen tank from Lockheed Martin Michoud in Louisiana -- is scheduled for January.

The X-33 is scheduled to make as many as 15 test flights beginning in July 1999. Launched vertically from Edwards, it will fly up to 15 times the speed of sound at altitudes approaching 60 miles. Planned landing sites are located at Dugway Proving Ground, UT, and Malmstrom Air Force Base, MT.

-end-

NOTE TO EDITORS: NASA and Lockheed Martin have scheduled a media teleconference with program officials to discuss the Critical Design Review beginning at 11 a.m. EST on Monday, Nov. 3. Gene Austin, NASA X-33 program manager; Jerry Rising, Lockheed Martin Skunk Works vice president X-33/RLV; and Cleon Lacefield, Lockheed Martin Skunk Works X-33 program manager, are scheduled to participate. Media wishing to participate should call 205/544-6903 and enter Conference Code # 1779 at the voice prompt.

J97-37

National Aeronautics and Space Administration

SPACE SHUTTLE MISSION STS-87

PRESS KIT
NOVEMBER 1997

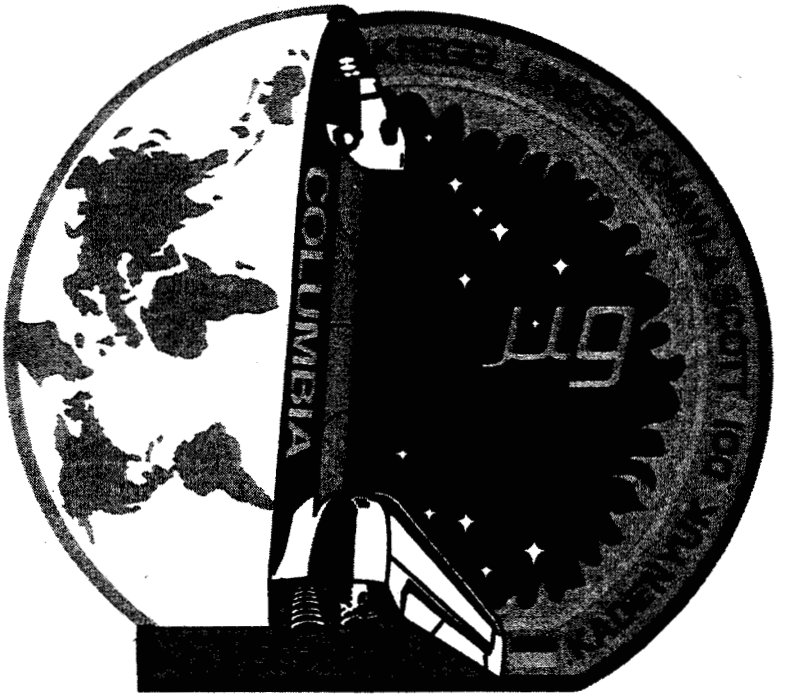

UNITED STATES MICROGRAVITY PAYLOAD-4

SPARTAN-201

NASA PAO CONTACTS

Shuttle Program Contacts

Debra Rahn/Mike Braukus Headquarters Washington, D.C.	Space Shuttle Mission, International Cooperation Policy/Mgmt	202/358-1639
Kyle Herring / Ed Campion Johnson Space Center Houston, TX	Mission Operations / Astronauts	281/483-5111
Bruce Buckingham / Dave Dickinson Kennedy Space Center, FL	Launch Processing KSC Landing Info.	407/867-2468
Fred Brown Dryden Flight Research Center Edwards, CA	DFRC Landing Info	805/258-2663
June Malone Marshall Space Flight Center Huntsville, AL	External Tank / Solid Rocket Boosters / Shuttle Main Engines	205/544-7061

STS-87 Payload Information Contacts

Joel Wells Kennedy Space Center, FL	CUE	407/867-2468
James Hartsfield Johnson Space Center Houston, TX	EVA Activity	281/483-5111
Nancy Neal / Susan Hendrix Goddard Space Flight Center Greenbelt, MD	SPARTAN, GAS Hitchhiker Payloads	301/286-8955
Jerry Berg / Steve Roy Marshall Space Flight Center Huntsville, AL	USMP-4	205/544-0034

TABLE OF CONTENTS

GENERAL MISSION INFORMATION

General Press Release 01

Media Services Information 04

STS-87 Quick Look Facts 06

Crew Responsibilities 07

Development Test Objectives (DTOs) / Detailed Supplementary Objectives (DSOs) / Risk Mitigation Experiments (RMEs) 07

Payload and Vehicle Weights 08

Orbital Events Summary 08

Mission Summary Timeline 09

Shuttle Abort Modes 10

UNITED STATES MICROGRAVITY PAYLOAD-4 (USMP-4) 11

Advanced Automated Directional Solidification Furnace (AADSF) 11

Confined Helium Experiment (CHeX) 12

Isothermal Dendritic Growth Experiment (IDGE) 13

Materials for the Study of Interesting Phenomena of Solidification on Earth and in Orbit (MEPHISTO) 13

Microgravity Glovebox Facility (MGBX) 14

Enclosed Laminar Flames (ELF) 15

Wetting Characteristics of Immiscibles (WCI) 15

Particle Engulfment and Pushing by a Solid/Liquid Interface (PEP) 16

Space Acceleration Measurement System (SAMS) 16

Orbital Acceleration Research Experiment (OARE) 17

SPARTAN-201 18

Automated Rendezvous and Capture Video Guidance Sensor 18

STS-87 EXTRAVEHICULAR ACTIVITIES 20

EDFT-05 20
Autonomous EVA Robotic Camera/Sprint (AERCam) 22

HITCHHIKER PAYLOADS 23
SOLSE/LORE 23
LHP/NaSBE 24
TGDF 25

GET AWAY SPECIAL-036 26

COLL ABORATIVE UKRAINIAN EXPERIMENT (CUE) 26

STS-87 DEVELOPMENT TEST OBJECTIVES 28

STS-87 DETAILED SUPPLEMENTARY OBJECTIVES 29

STS-87 RISK MITIGATION EXPERIMENTS 30

STS-87 CREW BIOGRAPHIES 31
Kevin Kregel, Commander (CDR) 31
Steve Lindsey, Pilot (PLT) 33
Kalpana Chawla, Mission Specialist 1 (MS 1) 35
Winston Scott, Mission Specialist 2 (MS 2) 36
Takao Doi, Mission Specialist 3 (MS 3) 38
Leonid Kadenyuk, Payload Specialist 1 (PS 1) 39

Release: J97-37

SOLAR AND MICROGRAVITY RESEARCH HIGHLIGHT FINAL SHUTTLE MISSION OF 1997

Experiments to study how the weightless environment of space affects various physical processes, observations of the Sun's outer atmospheric layers along with a spacewalk to rehearse future Space Station operations, will highlight NASA's eighth and final Shuttle mission of 1997 with the launch of Shuttle Columbia on Mission STS-87.

The STS-87 crew will be commanded by Kevin R. Kregel, who will be making his third Shuttle flight. The pilot, Steven W. Lindsey, will be making his first flight. There are three mission specialists assigned to this flight. Kalpana Chawla, serving as Mission Specialist-1, is making her first flight. Mission Specialist-2 Winston E. Scott is making his second flight. Takao Doi, from the Japanese space agency (NASDA), will serve as Mission Specialist-3 and is making his first flight. During the flight, Doi will become the first Japanese and second non-U.S. person to perform a Shuttle spacewalk. Leonid K. Kadenyuk from the Ukrainian space agency will be making his first space flight as Payload Specialist-1 and is and is the first Ukrainian to fly aboard the Space Shuttle.

Columbia is targeted for launch on November 19 from NASA's Kennedy Space Center Launch Complex 39-B. The 2 _ hour available launch window opens at 2:46 p.m. EST. The STS-87 mission is scheduled to last 15 days, 16 hours, 34 minutes. An on-time launch on November 19 and nominal mission duration would have Columbia landing back at Kennedy Space Center on December 5 at about 7:20 a.m. EST.

On launch day, Columbia's eight and a half minute climb to orbit will take a different approach from all previous Shuttle launches. Most of the powered flight period will be as before with a "heads down" roll maneuver performed shortly after liftoff and solid rocket booster separation just over two minutes into the launch. However, at about six minutes into the flight, a second roll maneuver to a "heads up" position will be performed. The second roll maneuver, done gradually over a 20 second period, will allow the Shuttle to acquire communications with the Tracking Data Relay Satellite System (TDRSS). Use of the TDRSS will remove the need for Bermuda tracking station support and provide a cost savings to the space agency.

The prime mission objective for the STS-87 mission is the United States Microgravity Payload-4 (USMP-4) payload which is focused on gaining additional understanding of the basic properties and behavior of various materials and liquids being flown in space. While extensive ground-based studies in these areas have been conducted, Earth's gravity overshadows or distorts many measurable results. The near-weightless environment aboard the Space Shuttle unmasks subtle physical processes, giving researchers a clearer look into the laws of nature, a perspective that cannot be seen in laboratories on Earth.

Knowledge gained from these experiments may help produce better semiconductors for complex computers and other high-tech electronics. USMP science also could help produce stronger metal alloys sought by the aircraft and automobile industries to improve their economic competitiveness.

Another payload in Columbia's cargo bay is the Spartan 201-04 free-flyer. Spartan will be deployed and retrieved using the Shuttle's mechanical arm and is designed to investigate physical conditions and processes of the hot outer layers of the Sun's atmosphere, or solar corona. While deployed from the Shuttle, Spartan will gather measurements of the solar corona and solar wind.

Information collected during this mission will lead to a much better understanding of the solar winds that directly influence orbiting satellites and weather conditions on Earth which can in turn impact television and phone communications.

On Flight Day Six, STS-87 astronauts Winston Scott and Takao Doi will perform a 6 1/2-hour spacewalk to evaluate equipment and procedures that will be used during construction and maintenance of the International Space Station. This spacewalk will accomplish all of the primary objectives originally planned as part of the STS-80 mission in November 1996 that were not achieved due to a stuck airlock hatch.

The spacewalk will include an end-to-end demonstration of a maintenance task simulating the changing out of Orbital Replacement Units (ORUs) on the International Space Station. A crane designed for use in moving large ORUs on the space station also will be evaluated as part of the task.

Toward the end of spacewalk activities, the Autonomous Extravehicular Activity Robotic Camera Sprint (AERCam Sprint) payload will undergo an evaluation test as a prototype free-flying television camera that could be used for remote inspections of the exterior of the International Space Station. The sphere, which in appearance looks like an oversized beachball, will be released and fly freely in the forward cargo bay for about 30 minutes. The free-flyer will be remotely controlled by Pilot Steve Lindsey from the Shuttle's aft flight deck.

Other experiments flying in Columbia's cargo bay include several hitchhiker payloads. The SOLSE or Shuttle Ozone Limb Sounding Experiment and the Limb Ozone Retrieval Experiment (LORE) will be gathering vertical profiles of the Earth's ozone layer. Unlike other satellites that only provide a horizontal view of the ozone, the vertical view will help investigators understand the actual distribution of ozone. The Loop Heat Pipe (LHP) experiment is investigating a unique thermal energy management system using a loop heat pipe that is comprised of a passive, two-phase flow device that transports thermal energy through semi-flexible tubes. This type of system will be used on the International Space Station and future satellites. The Sodium Sulfur Battery Experiment (NaSBE) is studying the microgravity operation of sodium and sulfur liquid electrodes. The reaction of the battery cells in simulated geostationary and low Earth orbits will be investigated.

Flying in the middeck area of Columbia is the Collaborative Ukrainian Experiment (CUE), a collection of 10 plant space biology experiments. Kadenyuk will perform the CUE

experiments, which seek to discover what, if any, developmental events during plant reproduction fail to function normally in the microgravity environment, along with comparing pollination and fertilization processes done in microgravity with ones performed on ground control subjects.

CUE also features an educational component that involves evaluating the effects of microgravity on the pollination and fertilization of Brassica rapa (Wisconsin Fast Plants) seedlings. As many as 625,000 American students and teachers in the United States and a minimum of 20,500 Ukrainian students and teachers will perform experiments on the ground while Kadenyuk performs the flight experiments in space.

STS-87 will be the 24th flight of Columbia and the 88th mission flown since the start of the Space Shuttle program in April 1981.

MEDIA SERVICES INFORMATION

NASA Television Transmission

NASA Television is available through the GE2 satellite system which is located on Transponder 9C, at 85 degrees west longitude, frequency 3880.0 MHz, audio 6.8 MHz.

The schedule for television transmissions from the orbiter and for mission briefings will be available during the mission at Kennedy Space Center, FL; Marshall Space Flight Center, Huntsville, AL; Dryden Flight Research Center, Edwards, CA; Johnson Space Center, Houston, TX; and NASA Headquarters, Washington, DC. The television schedule will be updated to reflect changes dictated by mission operations.

Status Reports

Status reports on countdown and mission progress, on-orbit activities and landing operations will be produced by the appropriate NASA newscenter.

Briefings

A mission press briefing schedule will be issued before launch. During the mission, status briefings by a flight director or mission operations representative and when appropriate, representatives from the payload team, will occur at least once each day. The updated NASA television schedule will indicate when mission briefings are planned.

Internet Information

Information on STS-87 is available through several sources on the Internet. The primary source for mission information is the NASA Shuttle Web, part of the World Wide Web. This site contains information on the crew and its mission and will be regularly updated with status reports, photos and video clips throughout the flight. The NASA Shuttle Web's address is:

http://shuttle.nasa.gov

If that address is busy or unavailable, Shuttle information is available through the Office of Space Flight Home Page:

http://www.osf.hq.nasa.gov/

General information on NASA and its programs is available through the NASA Home Page and the NASA Public Affairs Home Page:

http://www.nasa.gov
or
http://www.nasa.gov/newsinfo/index.html

Information on other current NASA activities is available through the Today@NASA page:

http://www.nasa.gov/today.html

The NASA TV schedule is available from the NTV Home Page:

http://www.nasa.gov/ntv

Status reports, TV schedules and other information also are available from the NASA Headquarters FTP (File Transfer Protocol) server, ftp.hq.nasa.gov. Log in as anonymous and go to the directory /pub/pao. Users should log on with the user name "anonymous" (no quotes), then enter their E-mail address as the password. Within the /pub/pao directory there will be a "readme.txt" file explaining the directory structure:

* Pre-launch status reports (KSC): **ftp.hq.nasa.gov/pub/pao/statrpt/ksc**
* Mission status reports(JSC): **ftp.hq.nasa.gov/pub/pao/statrpt/jsc**
* Daily TV schedules: **ftp.hq.nasa.gov/pub/pao/statrpt/jsc/tvsked.**

NASA Spacelink, a resource for educators, also provides mission information via the Internet. Spacelink may be accessed at the following address:

http://spacelink.nasa.gov

Access by CompuServe

Users with CompuServe accounts can access NASA press releases by typing "GO NASA" (no quotes) and making a selection from the categories offered.

STS-87 Payload-Related Web Sites

The following internet web sites have been established for various STS-87 payloads and mission activities.

http://sspp.gsfc.nasa.gov
http://zeta.lerc.nasa.gov/expr2/gjdfe.htm
http://sspp.gsfc.nasa.gov/g-036.htm
http://atlas.ksc.nasa.gov/education/general/cue.htm
http://fastplants.cals.wisc.edu/cue/cue.html

STS-87 QUICK LOOK

Launch Date/Site:	November 19, 1997/KSC Launch Pad 39-B
Launch Time:	2:46 P.M. EST
Launch Window:	2 hours, 30 minutes
Orbiter:	Columbia, (OV-102), 24th flight
Orbit Altitude/Inclination:	150 nautical miles, 28.5 degrees
Mission Duration:	15 days, 16 hours, 34 minutes
Landing Date:	December 5, 1997
Landing Time:	7:20 A.M. EST
Primary Landing Site:	Kennedy Space Center, Florida
Abort Landing Sites:	Return to Launch Site - KSC Transoceanic Abort Sites - Banjul, The Gambia Ben Guerir, Morocco Moron, Spain Abort-Once Around - Edwards AFB, California
Crew:	Kevin Kregel, Commander (CDR), 3rd flight Steve Lindsey, Pilot (PLT), 1st flight Kalpana Chawla, Mission Specialist 1 (MS 1), 1st flight Winston Scott, Mission Specialist 2 (MS 2), 2nd flight Takao Doi, Mission Specialist 3 (MS 3), 1st flight Leonid Kadenyuk, Payload Specialist 1, 1st flight
EVA Crewmembers:	Winston Scott (EV 1), Takao Doi (EV 2)
Cargo Bay Payloads:	SPARTAN-201-04 USMP-4 EDFT Equipment SOLSE NASBE OARE LHP TGDF GAS-036
In-Cabin Payloads:	MGBX CUE Sprint/AERCAM MSX SIMPLEX

CREW RESPONSIBILITIES

Payloads	Prime	Backup
Rendezvous	Kregel	Lindsey
Rendezvous Tools	Doi	Scott
SPARTAN	Chawla	Lindsey
USMP-4	Chawla	Scott
EVA	Scott	Doi
Intravehicular Crewmember	Chawla	Lindsey
SPRINT	Lindsey	Scott, Kregel
RMS	Chawla	Lindsey
CUE	Kadenyuk	Kregel, Chawla
NASBE	Scott	Lindsey
LHP	Scott	Kregel
SOLSE	Scott	Doi
Earth Observations	All Crewmembers	
Ascent Seat on Flight Deck	Chawla	------
Entry Seat on Flight Deck	Doi	------

Developmental Test Objectives/ Detailed Supplementary Objectives/ Risk Mitigation Experiments

DTO 312:	External Tank TPS Performance
DTO 671:	EVA Hardware for Future Scheduled EVA Missions
DTO 685:	On-Board Situational Awareness Displays for Ascent and Entry
DTO 805:	Crosswind Landing Performance
DTO 844:	RMS Situational Awareness Displays
RME 1309:	In-Suit Doppler Ultrasound for Determining Risk of Decompression
RME 1323:	Autonomous EVA Robotic Camera/SPRINT
DSO 206:	Effects of Space Flight on Bone and Muscle (Doi only)
DSO 331:	LES and Sustained Weightlessness on Egress Locomotion
DSO 496:	Individual Susceptibility To Post-Spaceflight Orthostatic Intolerance
DSO 802:	Educational Activities

PAYLOAD AND VEHICLE WEIGHTS

Vehicle/Payload	Pounds
Orbiter (Columbia) empty and 3 SSME's	181,796
Shuttle System at SRB Ignition	4,520,785
Orbiter Weight at Landing with Cargo	226,449
SPARTAN	2,980
EDFT Hardware	873
LHP	276
USMP-4	4,704
OARE	249
SOLSE	432
CUE	299

STS-87 ORBITAL EVENTS SUMMARY

(based on a November 19, 1997 Launch)

EVENT	MET	TIME OF DAY (EST)
Launch	0/00:00	2:46 PM, November 19
SPARTAN Deployment	1/01:14	4:00 PM, November 20
SPARTAN Retrieval	3/04:44	7:30 PM, November 22
EVA	5/03:50	6:36 PM, November 24
Crew News Conference	12/18:05	8:51 AM, December 2
KSC Landing	15/16:34	7:20 AM, December 5

MISSION SUMMARY TIMELINE

Flight Day One:
Launch/Ascent
OMS-2 Burn
Payload Bay Door Opening
USMP-4 Activation
MGBX Checkout
RMS Checkout

Flight Day 2:
SPARTAN Deploy
USMP Operations
CUE Operations

Flight Day 3:
SOLSE Operations
USMP Operations
CUE Operations

Flight Day 4:
SPARTAN Retrieval
CUE Operations
USMP Operations

Flight Day 5:
EVA Preparations
USMP Operations
CUE Operations

Flight Day 6:
EVA (6 hours; Scott and Doi)
CUE Operations
USMP Operations

Flight Day 7-12 (Off-Duty Time on FDs 7 and 11):
USMP Operations
CUE Operations

Flight Day 13:
USMP Operations
CUE Operations
Crew News Conference

Flight Day 14:
SOLSE Operations
USMP Operations
CUE Operations

Flight Day 15:
Flight Control System Checkout
Reaction Control System Hot-Fire
Cabin Stowage
USMP and CUE Deactivation

Flight Day 16:
Payload Bay Door Closing
Deorbit Burn
KSC Landing

SHUTTLE ABORT MODES

Space Shuttle launch abort philosophy aims toward safe and intact recovery of the flight crew, orbiter and its payload. Abort modes for STS-87 include:

* Abort-To-Orbit (ATO) -- Partial loss of main engine thrust late enough to permit reaching a minimal 105-nautical mile orbit with the orbital maneuvering system engines.

* Abort-Once-Around (AOA) -- Earlier main engine shutdown with the capability to allow one orbit of the Earth before landing at the White Sands Space Harbor, N.M.

* Transoceanic Abort Landing (TAL) -- Loss of one or more main engines midway through powered flight would force a landing at Banjul, The Gambia, Moron, Spain or Ben Guerir in Morocco.

* Return-To-Launch-Site (RTLS) -- Early shutdown of one or more engines, and without enough energy to reach a TAL site, would result in a pitch around and thrust back toward Kennedy until within gliding distance.

United States Microgravity Payload-4 (USMP-4)

United States Microgravity Payload-4 research will be conducted in the areas of materials science, combustion science and fundamental physics. The Marshall Space Flight Center in Huntsville, Ala., manages USMP-4 as NASA's lead center for microgravity research. On orbit, crew members will activate the USMP-4 experiment hardware, while science teams in Marshall's Science Operations Area monitor and adjust experiments, based on data downlinked from Columbia. USMP science is a major part of NASA's efforts to use the attributes of the space environment to advance knowledge, improve the quality of life on Earth and strengthen the foundations for continuing exploration and use of space.

Advanced Automated Directional Solidification Furnace (AADSF)
Principal Investigators: Dr. Archibald L. Fripp, NASA Langley Research Center, Hampton, Va.; and Dr. Sandor L. Lehoczky, NASA Marshall Space Flight Center, Huntsville, Ala.

The speed and the amount of information that can be stored and sent by computers and high-tech electronics, using sophisticated semiconductor materials, may be increased by better control of how the semiconductor's crystal structure forms. Extensive research and millions of dollars are invested each year in ground-based efforts to improve semiconductor formation and performance. During the USMP-4 mission, researchers will expand upon these efforts and upon findings from USMP-2 and 3 with further experiments in the Advanced Automated Directional Solidification Furnace (AADSF). The goals are to understand how to develop better material processes, material performance and to reduce production costs.

A semiconductor's usefulness is determined by how atoms are ordered within its underlying three-dimensional structure. These materials, when produced under the influence of gravity, often suffer structural damage that limit the semiconductor's usefulness. This damage is usually the result of buoyancy-induced convection, as well as another undesirable phenomenon -- sedimentation. Both of these processes are greatly reduced in the Shuttle's orbiting microgravity laboratory.

Buoyancy-driven convection and sedimentation occur when fluids are different in density. On Earth, gravity causes the denser, heavier material to sink while the lighter fluid rises. Researchers seek to understand the resulting flows caused by these processes, and how these flows show up as weak points in a semiconductor's structure.

During USMP-4, this specialized furnace will process two different alloys that are used to make infrared detectors and lasers. Lead-tin-telluride and mercury-cadmium-telluride are semiconductor material alloys that will be studied by the investigative technique known as directional solidification. This method involves cooling a molten material, causing a solid to form at one end of the sample. The solidification region grows at the point where the solid and liquid meet, known as the solid/liquid interface. This interface moves from one end of the sample to the other at a controlled rate, resulting in a high degree of structural uniformity.

The facility has multiple temperature zones, ranging from extremely hot -- above the melting point of the material (about 1600 degrees Fahrenheit/870 Celsius) -- to cooler zones below the melting point (about 650 degrees Fahrenheit/340 Celsius). Once a region of the alloy is melted, the sample is slowly moved and directional solidification takes place.

The solid/liquid interface occurs where the flows in the molten material influence the final composition and structure of the semiconductor alloy sample. After the mission, scientists will analyze the solidified sample to determine the extent of defects and the distribution of elements in the resulting alloy.

Advances in the quality of crystals for semiconductor materials may impact normal consumer products such as computers, calculators and high-technology applications such as infrared detectors and lasers.

Confined Helium Experiment (CHeX)
Principal Investigator: Dr. John Lipa, Stanford University, Stanford, Calif.

Better understanding of the effects of miniaturization on material properties should lead to even smaller and even more efficient electronic devices, including computers of the future, with reduced costs for the consumer.

One key research goal of both NASA and its industry partners is to develop successful measurement techniques to analyze the behavior and properties of various materials used in electronics.

Almost daily, the semiconductor industry reduces the size of all its devices, such as computer chips, to try to improve transmission speed and power consumption and to reduce cost. However, electrical performance is affected first by sheer size, then by additional factors such as thickness, irregularities in surface structure, and changes in the part's material properties. Researchers hope to understand the size-dependent changes that take place in various material properties through ultra-precise measurements in cooled liquid helium. Scientists expect these delicate measurements to be more accurate in the near weightlessness of the orbiting Space Shuttle, than when taken under the influence of Earth-bound gravity.

The CHeX facility is comprised of a refrigerated bottle or dewar, with a protective covering. The dewar is covered on the outside by a magnetic shield. For protection of the instrument, a vacuum is created between the magnetic shield and the refrigerated bottle.

Inside the refrigerated container or dewar, the experiment sample includes 392 crystal silicon disks, each two-thousandths of an inch thick. This stack of disks is arranged to force the liquid helium into very thin layers. Through these liquid helium layers, researchers plan to make measurements that take advantage of liquid helium's ability to conduct heat 1000 times more effectively than any other material.

Thermal controls and heater feedback systems, located in the instrument, regulate the temperature of the experiment sample to better than a billionth of a degree over several days.

In space, the experiment is controlled by its onboard computer, and data from the experiment is routed to the investigation team on the ground at Marshall Space Flight Center.

Isothermal Dendritic Growth Experiment (IDGE)

Principal Investigator: Dr. Martin Glicksman, Rensselaer Polytechnic Institute, Troy, N.Y.

Researchers are striving to understand the process of solidification and to improve metal manufacturing techniques. This investigation seeks to unlock advanced processes that will create new alloys that are stronger and have better controlled and more reliable properties than currently available. The experiment may improve manufacturing processes involved in the production of steel, aluminum and superalloys used in the production of automobiles
and airplanes.

As many molten materials solidify, they form tiny pine tree-shaped crystals called dendrites, from the ancient Greek for "tree." The size, shape and direction of these crystals, in particular for many commercial metal alloys, dictate the final properties of the resulting solid material, such as its hardness, its ability to bend without breaking and its electrical properties. On USMP-2 and 3, researchers were able to observe dendrites in the absence of convection at extremely small temperature differences below the freezing point, a phenomenon never measured accurately on Earth. USMP-4 investigations will continue to build upon those findings.

The Isothermal Dendritic Growth Experiment apparatus consists of a thermostat that contains the dendrite growth chamber. Dendrite growth begins by cooling a tube, known as a stinger, which is filled with the liquid known as pivalic acid, and extends into the growth chamber. This causes the acid to solidify, and the solidification front to move down the tube to the tip of the stinger and emerge into the main chamber of acid as an individual dendrite.

Two television cameras will allow scientists to watch as dendrites emerge. The images of dendrites growing in space will be viewed in near-real-time by scientists on the ground. When the experiment computer detects dendrites, it will trigger two 35-millimeter cameras to photograph the samples. Researchers will compare photographs of the space-grown dendrites to evaluate growth rates and dendrite shapes.

Materials for the Study of Interesting Phenomena of Solidification on Earth and in Orbit (MEPHISTO)

Principal Investigator: Professor Reza Abbaschian, University of Florida, Gainesville, Fla.

A team of international scientists is studying fundamental natural processes with importance implications for the quality and performance of products in use in the home and by industry. The research may improve products ranging from alloys for airplane turbine blades to everyday electronic materials.

The investigation known as MEPHISTO is an international cooperative program between NASA, the French Space Agency, the French Atomic Energy Commission and the University of Florida. The goal of the experiment is to understand how gravity-driven convection affects the production of metals, alloys and electronic materials. MEPHISTO flew on the three previous USMP missions. The fourth flight of MEPHISTO will continue the investigation into how materials solidify in microgravity. Ultimately, the MEPHISTO experiments may bring dramatic improvements in the production process of various materials.

Researchers want to know precisely what happens when materials undergo the transition from a liquid to a solid -- the solidification of a molten material --to better understand and control this process on Earth. This process is complicated on Earth by gravity-induced factors such as convection, or flows of material within the liquid. This motion within the liquid material causes physical imperfections that significantly affect the quality of semiconductor and electronic structures. In microgravity, these flows are effectively eliminated and scientists are better able to observe and understand the solidification process.

The MEPHISTO furnace aboard USMP-4 will repeatedly process three samples of bismuth with small additions of tin using directional solidification, a common method for growing semiconductors and metal alloys. As the solidified region grows, the boundary between the solid and liquid material will move from one end of the sample toward the other. Electrical measurements will gauge temperature variations in the solidification front and electrical pulses will mark the shape of the front as it progresses. The temperature variations are expected to show how stable the solidification front is, a factor that is very important to understanding and producing new material properties.

Microgravity Glovebox Facility (MGBX)
MGBX Project Scientist: Dr. Donald Reiss, NASA Marshall Space Flight Center, Huntsville, Ala.

While the preceding experiments operate without crew involvement, one facility that will support science experiments requiring a high degree of crew involvement is the Microgravity Glovebox.

Two materials science investigations and one combustion science experiment will be conducted in the Microgravity Glovebox, located in the Shuttle middeck. This versatile facility offers scientists the capability to conduct experiments, test science procedures and develop new technologies in microgravity. The Microgravity Glovebox enables crew members to handle, transfer and manipulate experiment hardware and materials that are not approved for use in the open cabin environment. The glovebox was developed to provide such capabilities in the Shuttle middeck, on the Mir Space Station and for future use on the International Space Station. When an airtight seal is required, crew members can insert their hands into rubber gloves attached to the glovebox doors, allowing no airflow between the enclosure and the middeck, except through a specially designed filter. The facility provides power, air and particle filtration, light, data collection, real-time monitoring, and sensors for gas, temperature, air pressure and humidity.

Experiment: Enclosed Laminar Flames (ELF)

Experiment Facility: Microgravity Glovebox
Principal Investigator: Dr. Lea-Der Chen, University of Iowa, Iowa City, Iowa

Combustion - the scientific term for burning - plays a key role in home heating, air pollution, transportation, propulsion, global environmental heating and materials processing. Combustion in normal gravity creates convection - flows or movements within a liquid or gas caused when lighter parts rise to the top and heavier parts sink to the bottom. In microgravity, scientists can study subtle processes ordinarily masked by the effects of gravity.

The Enclosed Laminar Flames experiment will examine the effect of different air flow velocities on the stability of laminar - or non-turbulent - flames. Enclosed laminar flames are commonly found in combustion systems such as power plant and gas turbine combustors, and jet engine afterburners. Results of this investigation may help to optimize the performance of industrial combustors, including pollutant emissions and heat transfer.

Experiment: Wetting Characteristics of Immiscibles (WCI)
Experiment Facility: Microgravity Glovebox
Principal Investigator: Dr. Barry Andrews, University of Alabama at Birmingham, Birmingham, Ala.

Special metal alloys - known as immiscibles - contain components that do not mix in the liquid melt (similar to oil and water) before solidification. Potential applications of these metal alloys include ball-bearing, electronic and semiconductor materials. Previous microgravity experiments with these alloys revealed unexpected separation of their components into layers, even though gravity's effects were absent. The Wetting Characteristics of Immiscibles experiment will investigate one possible cause for this segregation - droplet wetting, or coating, along the container walls. The investigation is designed to study ways to control this wetting behavior and ultimately result in improved materials processing on Earth for this potentially important class of alloys.

The experiment will study various concentration mixtures of the substances succinonitrile and glycerin in a glass container with a non stick perimeter wall. Succinonitrile is a transparent substance that behaves in a manner similar to metals during the solidification process and is used to model metallic structures.

The experiment is performed inside a thermal chamber in the Microgravity Glovebox. The mixed alloys are heated until the sample melts and observed through an external microscope during the cooling phase for any wetting phenomena. The observations are recorded on videotape for later study and analysis.

Experiment: Particle Engulfment and Pushing by a Solid/Liquid Interface (PEP)
Experiment Facility: Microgravity Glovebox

Principal Investigator: Dr. Doru Stefanescu, University of Alabama, Tuscaloosa, Ala.

Composite materials - those in which a mixture of two or more materials form a new material with specific properties - are developed in order to take advantage of the properties of each of the component materials. The resulting composite material can be superior in terms of stiffness, strength and similar properties. Processing of metal composite materials uses the properties of various components to attain the desired composite strength, which is dependent upon the even dispersion of particles throughout the metal. As liquid metals solidify, a band of atoms - known as the solidification interface - forms. As the interface moves, particles are either pushed ahead of, or engulfed into, the solid material. Convection - flows or movements in a liquid or gas caused by gravity - has hampered ground-based experiments from providing accurate understanding of the physics of the problem.

The Particle Engulfment and Pushing by a Solid/Liquid Interface Experiment will allow investigators to study the behavior and movement of particles as the sample is solidified from one end to the other in a convection-free microgravity environment. This research could lead to improved materials processing to benefit the automotive and aerospace industries.

Samples will be enclosed between two glass slides. The mixture will be melted in a thermal chamber inside the Microgravity Glovebox. The interaction between a moving solid-liquid interface and the glass bead particles will be observed and recorded.

Space Acceleration Measurement System (SAMS)
Project Scientist: Ms. Melissa Rogers, NASA Lewis Research Center, Cleveland, Ohio

The effects of Earth's gravity on the Space Shuttle and its cargo are markedly reduced when in orbit. However, the effects are never completely eliminated. Disturbances occur when crew members move about the Shuttle, when onboard equipment is operated, or when thrusters are fired to maneuver the Shuttle to its proper position. Even slight, atmospheric drag on the Shuttle can create disturbances that mimic gravity. Such minute changes in the orbital environment of the Shuttle can affect sensitive experiments being conducted onboard. Researchers and scientists conducting experiments on the Fourth U.S. Microgravity Payload mission will depend on the Space Acceleration Measurement System to record and downlink in near real-time, precise measurements of such changes. The system will enable them to adjust their experiments and improve the collection of scientific information during the mission. Post-mission, the system's measurements aid in determining how vibrations or accelerations affected the results of experiments.

The system accurately measures and maps the acceleration environment in orbit, using three remote sensor heads mounted in different locations. Each sensor head has three accelerometers oriented to enable the detection of accelerations three-dimensionally. For this mission, five sensor heads will be used to detect accelerations over a wide range of frequencies.

Information collected by the sensors is transmitted to the ground through the Shuttle's communications system. This allows scientists to make immediate assessments of the

effects of the microgravity environment and make necessary corrections for their experiments.

Orbital Acceleration Research Experiment (OARE)
Project Scientist: Ms. Melissa Rogers, NASA Lewis Research Center, Cleveland, Ohio

There is no line -- no hard boundary -- between Earth's atmosphere and space. At the Earth's surface, the atmosphere is thickest, and it gradually thins with increasing elevation. Even altitudes reached by the Space Shuttle are not completely without air. The Shuttle travels very rapidly through this tenuous, near-vacuum atmosphere. But the Shuttle is slightly slowed, or decelerated, by friction with the gas molecules. And because the density of the atmosphere changes from day to night, the amount of friction varies proportionally.

The Orbital Acceleration Research Experiment (OARE) makes extremely accurate measurements of these variations and other disturbances, using a sensor called an accelerometer, and records them for later analysis. Analysis of these and other types of microgravity disturbances enables researchers to assess the influence of Shuttle accelerations on the scientific experiments carried onboard the Fourth U.S. Microgravity Payload.

The Orbital Acceleration Research Experiment is a self-calibrating instrument that monitors and records extremely small accelerations -- changes in velocity -- and vibrations that are experienced during orbit of the Shuttle. At the heart of the instrument is a miniature electrostatic accelerometer that precisely measures low-frequency, on-orbit acceleration disturbances. The OARE is capable of sensing and recording accelerations on the order of one-billionth the acceleration of Earth's gravity.

SPARTAN 201-04

The goal of the Spartan 201-04 mission is to investigate physical conditions and processes of the hot outer layers of the Sun's atmosphere, or solar corona. Deployed during STS-87, Spartan 201-04 will perform measurements of the solar corona and solar wind.

The Spartan spacecraft is a carrier for two instruments that will investigate the heating of the solar corona and the acceleration of the solar wind that originates in the corona. These complementary instruments, the Smithsonian Astrophysical Observatory's Ultraviolet Coronal Spectrometer (UVCS) and the Goddard Space Flight Center/High Altitude Observatory White Light Coronagraph (WLC), have flown aboard the Spartan carrier on three previous missions.

Spartan 201-04 flight operations are expected to benefit from the addition of the Technology Experiment Augmenting Spartan, known as TEXAS. This experiment was designed to be used by the scientists as a visual reference for the WLC instruments after the Spartan spacecraft is deployed. Scientists should be able to adjust the alignment of the WLC instrument while it is in orbit for optimal performance.

Astronaut Kalpana Chawla will use the Shuttle's robotic arm to deploy the Spartan 201-04 spacecraft during Flight Day 2 of the mission. The two instruments aboard Spartan will determine the physical condition of our Sun's corona by remote sensing methods. The WLC is a specialized telescope that produces an artificial eclipse of the Sun to image the solar corona. The UVCS performs spectroscopic measurements of the primary light emitted by highly ionized atoms. These measurements will be used to determine velocities, temperatures and densities of the coronal plasma. During the two days that Spartan is deployed, all WLC and UVCS observations will be coordinated with the ongoing Solar and Heliospheric Observatory (SOHO). These joint observations will provide scientists an expanded picture of the existing conditions within the Sun's corona and offer verification of collected data.

Information collected during the mission will lead to a better understanding of the solar flares and solar winds that directly impact orbiting satellites and weather conditions on Earth. Upon completion of the Spartan 201-04 mission, the Shuttle will retrieve the Spartan spacecraft and return it to Earth.

Spartan 201-04 is a primary Shuttle payload mission managed by the Spartan Project at Goddard in Greenbelt, Md. Craig Tooley of Goddard is Spartan's Mission Manager. The Principal Investigator for the UVCS instrument is Dr. John Kohl of the Smithsonian Astrophysical Observatory, Cambridge, Mass. Dr. Richard Fisher of Goddard is the STS-87 Payload Scientist and Principal Investigator for the WLC instrument.

Automated Rendezvous and Capture Video Guidance Sensor Flight Experiment
Project Manager: Gene Beam, Marshall Space Flight Center, Huntsville, Ala.

A key element of a new system for development of an automated space rendezvous and capture capability by the U.S. will be tested during the STS-87 mission. A technology demonstration of the Automated Rendezvous and Capture Video Guidance Sensor is one of the experiments associated with the Spartan flight.

Part of the expense of current missions relates to the high cost of ground operations supporting space vehicles on orbit. The cost of mission operations could be reduced significantly if rendezvous operations were automated.

Until now, NASA missions involving spacecraft rendezvousing in orbit and one spacecraft capturing or connecting to another have relied on human control throughout those operations. The alternative is relying on an automated rendezvous and capture capability. System elements are being designed, developed and tested by NASA to enable performing the task of spacecraft rendezvous and capture without having human operators at the controls.

The Automated Rendezvous and Capture technology under development at the Marshall Space Flight Center in Huntsville, Ala., requires little or no ground support. Onboard sensors, computers and navigation inputs from satellites provide the intelligence to complete docking maneuvers through automated operations.

The Video Guidance Sensor, also developed at Marshall, is a key component of the technology. It is the first element to be tested under space flight conditions and the only element to be studied during the STS-87 mission.

The system includes a video camera and dual-frequency lasers. A sensor will be mounted in the cargo bay of the Space Shuttle and an optical target on the Spartan spacecraft. The lasers illuminate reflectors on Spartan -- the Video Guidance Sensor's target -- and the reflected video images define the exact position of the spacecraft and its distance from the Space Shuttle.

The laser-video system offers improved accuracy over the use of radio frequency control systems for docking maneuvers. In ground testing, the system has homed in on its target at pinpoint accuracy -- down to one-tenth of an inch.

The Automated Rendezvous and Capture Video Guidance Sensor experiment is intended to demonstrate on-orbit operation of a laser-video docking sensor system. The experiment will collect tracking data both when the target is moving and static. The Video Guidance Sensor's performance will be tested under different lighting conditions, positions and distances ranging from 3 to 220 yards between Spartan and the Shuttle.

Tracking data will be recorded while Spartan is in free flight and during retrieval. The Remote Manipulator System -- the Shuttle's robot arm -- will place Spartan in 16 pre-determined positions while the Space Shuttle rotates to study performance under various lighting angles.

Collection of data for the experiment will involve only minimal adjustments to the standard Shuttle procedure for rendezvous and capture of a satellite -- in this case, Spartan. The Shuttle crew will continue to have primary control over the process. In parallel, a crew member will operate and monitor the Video Guidance Sensor during all phases of the experiment.

The Video Guidance Sensor and other Automated Rendezvous and Capture elements have been ground tested at the Marshall Center's Flight Robotics Laboratory. The Video Guidance Sensor and related technologies are being developed to support the International

Space Station, Reusable Launch Vehicles and other space vehicles. In addition, the Automated Rendezvous and Capture capability could play a role in future missions to Mars.

STS-87 Extravehicular Activities

Astronauts Winston Scott and Takao Doi will perform a 6 _ hour spacewalk on Flight Day 6 of STS-87 to evaluate equipment and procedures that will be used during construction and maintenance of the International Space Station. This spacewalk will accomplish all of the primary objectives originally planned as part of the STS-80 mission in November 1996 that were not be achieved due to a stuck airlock hatch.

The spacewalk is the sixth in a continuing series of Extravehicular Activities (EVAs) called the EVA Development Flight Tests (EDFT). This flight test series of spacewalks is designed to evaluate equipment and procedures planned for the station and to build spacewalking experience in preparation for assembly of the station. Scott is designated Extravehicular Crewmember 1 (EV-1) and will be distinguished by red bands worn on the legs of his spacesuit. Doi is designated EV-2. STS-87 Mission Specialist Kalpana Chawla will serve as the Intravehicular (IV) crewmember, assisting Scott and Doi from inside Columbia's crew cabin. Pilot Steve Lindsey also will assist with the spacewalks, controlling the robotic arm from inside the cabin.

The spacewalk will include an end-to-end demonstration of a maintenance task simulating the changing out of an International Space Station battery. A crane designed for use in moving large Orbital Replacement Units (ORUs) on the space station will be evaluated as part of the task. ORUs can be any piece of equipment that may be replaced on the station's exterior, and, for this evaluation, the simulated station battery will be moved using the crane. The evaluation of using the crane to move the simulated battery is planned to take almost three hours. Following the large ORU evaluation, use of the crane for moving a small ORU, a cable caddy that previously was used during an STS-72 spacewalk, will be evaluated by Doi for about 45 minutes.

Scott will evaluate working with the simulated large ORU from a Portable Foot Restraint (PFR), a work platform for spacewalkers, attached to the end of Columbia's robotic arm. Among the evaluations conducted during the spacewalk will be use of several temporary ORU handling and restraint aids, some of which are attached to the Crane. The spacewalk also will evaluate the carrier for the simulated ORU, a carrier that simulates a standard International Space Station ORU work site.

Later in the spacewalk, Scott will evaluate working with the simulated large ORU from a Portable Foot Restraint (PFR), a work platform for spacewalkers. The spacewalk also will evaluate a variety of other work aids and tools designed for use during station operations, including a Body Restraint Tether (BRT), a type of "third hand" stabilizing bar for spacewalkers; a Multi-Use Tether (MUT), a type of stabilizing tether similar to the BRT but that can be anchored to either round U.S. handrails or square Russian handrails; and a Power Tool designed for the station. Detailed descriptions of the major items to be evaluated include:

Crane

The 156-pound crane is six feet tall and has a boom that telescopes from four feet long to an extended length of 17.5 feet. It is designed to aid spacewalkers in transporting ORUs with a mass as great as 600 pounds from translation carts on the exterior of the International Space Station to various worksites on the truss structure. The crane boom's attachment mechanism may also provide a temporary stowage location for large units during maintenance work. The crane will be unstowed and installed to a socket along the left middle side of Columbia's cargo bay for the evaluations. The crane's boom may be extended by turning a ratchet fitting using a power tool or by using a backup manually operated hand crank. The crane also can be moved from side to side and up and down by respective manually operated hand cranks.

Battery Orbital Replacement Unit

A simulated battery for the International Space Station will be used for evaluations performed during STS-87 because the batteries will be among the most massive station ORUs. The station batteries will be mounted on the truss near the solar arrays and will provide power when the station moves into night on each orbit. The object to be used during STS-87 is not a real battery, although its size, 41 x 39 x 19 inches, and mass, about 354 pounds, closely imitate a station battery. It is also stowed in Columbia's cargo bay in fittings similar to those planned for stowing such replacement units during space station operations. The ORU carrier simulates a standard International Space Station work site.

Cable Caddy

The Cable Caddy is a small carrier device planned to hold about 20 feet of replacement electrical line for the space station. The operations of the Cable Caddy were flight-tested on STS-72 and on STS-87 it will be used only to simulate a small ORU for the space station. No cable will be unwound. The Cable Caddy has a mass of almost 50 pounds.

Body Restraint Tether

The Body Restraint Tether (BRT) is designed to hold a spacewalker steady when clamped to a handrail in order to free his hands for working. It was first flown on STS-69 and further evaluated on STS-72. The BRT is planned to provide a quick method of supplying stability for a spacewalker in a variety of locations where a foot restraint is not available. The 15-inch long tether essentially seeks to provide the astronaut with a "third hand" to add stability while working. During STS-87, the BRT will be evaluated by Doi.

Multi-Use Tether

The Multi-Use Tether (MUT) is a device similar to the BRT, but it has the capability to perform a greater variety of tasks. Different end effectors can be attached to the tether to grip station ORUs, various spacewalking tools or handrails. During STS-87, Scott will use the MUT and evaluate it while using it to assist with the other planned spacewalk evaluations.

Handling Aids

Two Scoops, handholds designed to attach to square robotics fittings on the ORU, will be evaluated for use with the simulated battery. Also, a D-handle, which looks somewhat like a small, half steering wheel, may be attached to one of the Scoops and evaluated as a tool to assist with manually maneuvering the ORU. The D-handle evaluation is a continuation of handling studies originally conducted during Space Shuttle mission STS-69.

Restraint Aids

An ORU Tether, a flexible, spring-loaded, retracting tether that automatically can hold an ORU firmly against a steadying bracket, will be attached to the crane. During the crane evaluations, the simulated battery will be detached from its carrier and attached to the ORU tether to evaluate it as a temporary restraint. Such temporary restraints may be needed by spacewalkers to hold ORUs during changeout activities on the station when two ORUs must be attached to the crane for a short period of time. Another type of restraint attached to the crane will be a Ballstack, a rigidizing tether similar to the BRT with two EVA Changeout Mechanisms (ECOM) at either end. The use of the Ballstack as a temporary restraint for the simulated battery will be evaluated in a manner similar to the ORU tether.

Near the end of the spacewalk, Scott will release the Autonomous EVA Robotic Camera (AERCam Sprint) for a 30 minute long free-flight evaluation. AERCam Sprint is a small, remotely controlled free-flying camera to be evaluated as a prototype of future such systems on the station. During the evaluation AERCam will be controlled from inside the shuttle cabin. At its conclusion, Scott will retrieve the free-flyer.

Autonomous Extravehicular Activity Robotic Camera Sprint

The Autonomous Extravehicular Activity Robotic Camera Sprint (AERCam Sprint) is an experiment planned to demonstrate the use of a prototype free-flying television camera that could be used for remote inspections of the exterior of the International Space Station.

The AERCam Sprint free-flyer is a 14-inch diameter, 35-pound sphere that contains two television cameras, an avionics system and 12 small nitrogen gas-powered thrusters. The sphere, which looks like an oversized soccer ball, will be released by Mission Specialist Winston Scott during the planned spacewalk and will fly freely in the forward cargo bay for about 30 minutes. The free-flyer will be remotely controlled by Pilot Steve Lindsey from the Shuttle's aft flight deck using a hand controller, two laptop computers and a window-mounted antenna.

The AERCam is designed to fly very slowly at a rate of less than one-quarter of a foot per second. Remote control of the AERCam is performed through two-way Ultra High Frequency radio communications, with data regarding the status of the free-flyer's systems transmitted back to the operator. Television images are transmitted back to the operator via a one-way S-band communications link. During the experiment operations, live television images also will be relayed via Columbia to Mission Control. Two miniature color television cameras are mounted on the free-flyer, one with a 6 millimeter lens and another with a 12 millimeter lens. The exterior of the free-flyer sphere is covered with a sixth-tenths of an inch-thick layer of Nomex felt to cushion any inadvertent contact with a spacecraft surface and prevent damage.

Most of the free-flyer's systems are derived from the development of the Simplified Aid for EVA Rescue (SAFER) backpack. The AERCam's thrusters, basic avionics, solid-state rate sensors, attitude hold electronics, nitrogen tank and hand controller are identical to those used on the SAFER. The AERCam thrusters, however, produce eight-hundredths of a pound of thrust while the SAFER thrusters produced eight-tenths of a pound of thrust.

The free-flyer is powered by lithium batteries. Its electrical supply and nitrogen supply are designed to last at least seven hours, the maximum length of a normal spacewalk. The AERCam sphere has a small floodlight built in that is identical to floodlights used on the helmets of spacesuits. Spaced equally around the sphere also are six, small, flashing yellow light-emitting diode lights that make the free-flyer visible to the operator in darkness.

The front of the sphere is marked by stripes and arrows while the back is marked by dots. These markings assist the operator in determining the orientation of the AERCam. A small fabric strap on the sphere serves as a handhold for the spacewalker while deploying and retrieving the free flyer.

During the time it is deployed during STS-87, evaluations will be performed of the AERCam's rotation and translation capabilities, its ability to observe a spacewalking task, and its ability to move along the edge of the Shuttle cargo bay while maintaining a fixed distance from the structure.

The AERCam free-flyer will be stowed inside Columbia's airlock.

HITCHHIKER PAYLOADS ON STS-87

Flying on the STS-87 Space Shuttle mission will be two hitchhiker payloads which were manifested by the Shuttle Small Payloads Project (SSPP) at the Goddard Space Flight Center in Greenbelt, Md.

SOLSE/LORE

The first payload consists of the SOLSE, the Shuttle Ozone Limb Sounding Experiment, which will demonstrate that vertical profiles of ozone can be measured with high resolution from solar ultraviolet (UV) scattering from the Earth's atmospheric limb. SOLSE will record continuous UV wavelengths in the 290-340 nanometer range to measure the ozone profile between 15 miles (25 kilometers) and 34 miles (55 kilometers). This demonstration flight will verify the viewing orientation for ozone retrieval and the use of Charge-Coupled Device array technology for ultraviolet imaging applications.

Current instruments that monitor ozone provide either limited vertical resolution, like the Solar Backscatter UV Experiment (SBUV) or limited coverage like the Stratospheric Aerosol and Gas Experiment (SAGE). Limb scattering should provide vertical resolution similar to SAGE with global coverage similar to SBUV.

LORE, the Limb Ozone Retrieval Experiment, is a complementary instrument to SOLSE. LORE will demonstrate that vertical profiles of ozone can be measured with high resolution using sunlight scattered in the Earth's atmospheric limb. LORE records this light in five discrete

wavelength bands throughout the ultraviolet, visible, and near infrared. These measurements will extend SOLSE's knowledge of the limb down to six miles (10 kilometers) above the surface of the Earth.

SOLSE and LORE will generate overall ozone coverage images and cross sections of the atmosphere showing ozone concentrations at different altitudes. The ability to determine where ozone depletion has occurred will aid in determining man-made versus natural causes that effect the ozone layer.

SOLSE uses the Hitchhiker-Junior Carrier System which is managed and operated by Goddard is a modular hardware system that accommodates experiments on the Space Shuttle. Hitchhiker experiments can be mounted in the cargo bay with this modular hardware. These experiments may receive orbiter power, but do not get command or telemetry interfaces to the Goddard Payload Operations and Control Center. Instead, the Shuttle crew may send commands to and receive telemetry from experiments via the Payload General Support Computer laptop computer.

The Mission Manager for SOLSE is Tom Dixon. Tammy Brown is the SOLSE Payload Manager and Dr. Richard McPeters is the SOLSE Principal Investigator. Dr. Ernest Hilsenrath is the Principal Investigator for LORE. All four personnel are located at Goddard.

LHP/NaSBE

STS-87 marks the flight of two premiere space application technology experiments, the Loop Heat Pipe (LHP) and the Sodium Sulfur Battery Experiment (NaSBE). Both experiments also use the Hitchhiker Carrier System.

The LHP experiment, sponsored by the Center for Space Power (Texas A & M University in Corpus Cristi, Texas) and managed by Dynatherm Corporation (Kelton, Pa.), is investigating a unique thermal energy management system using a loop heat pipe. The system is comprised of a passive, two-phase flow device that transports thermal energy through semi-flexible tubes. The use of passive heat transport devices will greatly enhance thermal management on small satellites.

NaSBE, sponsored by USAF Phillips Laboratory, (Albuquerque, N.M.) and managed by the Naval Research Laboratory, Washington, D.C., is studying the microgravity operation of sodium and sulfur liquid electrodes. The reaction of the battery cells in simulated geostationary and low Earth orbits will be investigated.

By using the Hitchhiker Carrier System, LHP/NaSBE makes full use of Hitchhiker's power, data, and command services. LHP/NaSBE will receive power from the orbiter and real time telemetry during the mission. The payload is operated out of the Goddard Payload Operations Control Center where commands are sent to the experiment. The LHP/NaSBE experiments are mounted in two locations on the sidewall of the cargo bay and they are connected to one Hitchhiker avionics box which maximizes the Shuttle's carrier capabilities.

The Mission Manager for LHP/NaSBE is Dr. Ruthan Lewis. The Principal Investigator for LHP is Dr. Walter Bienert of Dynatherm and the Project Engineer for NaSBE is Chris Garner from NRL.

More information on SOLSE, LORE, LHP/NaSBE, is available on the Shuttle Small Payloads Project web site at http://sspp.gsfc.nasa.gov.

TGDF

The Turbulent Gas-Jet Diffusion Flames (TGDF) experiment is a Hitchhiker CAP payload that will use the Get Away Special (GAS) canister. The TGDF experiment will fly as part of Goddard Space Flight Center Shuttle Small Payloads Project.

The objective of the TGDF experiment is to gain an improved understanding of the characteristics of transitional and turbulent gas-jet diffusion flames. TGDF hopes to understand the combustion processes of turbulent furnaces and engines to make the design of these devises more efficient for our use on Earth. Due to their random nature, turbulent flames are very difficult to study, whether experimentally or theoretically. As a simplification, the TGDF experiment will study the interaction of a steady, laminar flame with artificially-imposed flow vortices. The experiment cannot be conducted in normal gravity because buoyant (gravity-driven) convection causes flow instabilities that interfere with the experiment. For example, the flicker of a candle flame in a draft-free room is due to gravity through its generation of buoyant flow.

The flame will be taped by two video cameras contained within the combustion chamber. Three detectors will be used to measure the thermal radiation from the flame, both globally and at two discrete regions. The data resulting from the TGDF experiment will be used to validate computer models of the behavior of transitional and turbulent gas-jet diffusion flames under normal and microgravity environments.

The TGDF payload is completely automated, with the exception of activation and deactivation. The experiment will be activated by a crewmember (or a built-in timer), after being enabled by the Goddard-supplied baroswitch. Data acquisition, fuel flow, ignition, and iris operation are pre-programmed. The flame will burn for approximately two minutes. When data acquisition is completed, the experiment will be deactivated by a crewmember. There is no downlink of data during the mission. However, experiment data will be downloaded when the payload is deintegrated from the Space Shuttle at the end of the mission.

The TGDF experiment was proposed by investigators Dr. M. Yousef Bahadori (InnoTech, Inc.) and Dr. Uday Hegde (NYMA, Inc.). The flight hardware was designed, built, and functionally tested by the engineers and technicians of the NASA Lewis Research Center (in Cleveland, Ohio) under the direction of Project Manager Frank Vergilii, with guidance by Project Scientist Dennis Stocker. The Goddard Mission Manager for TGDF is Ben Lui.

More information on TGDF is available at the TGDF website at:

http://zeta.lerc.nasa.gov/expr2/gjdfe.htm

GET AWAY SPECIAL PAYLOAD

Get Away Special canister G-036, sponsored by El Paso (Texas) Community College and Goddard, contains four separate experiments.

The Cement Mixing Experiment (CME) will allow cement samples to mix with water. These samples will be compared with others produced on Earth to analyze the effects of microgravity on the combination of cement and water, as well as to study the potential of using cement or similar materials in outer space.

Configuration Stability of Fluid Experiment (CSFE) is a study designed to investigate the effects of microgravity on the configuration stability of a two phase fluid system. CSFE will be videotaped while in orbit to aid in understanding what occurs during flight. Three accelerometers, instruments designed to measure acceleration and vibration, will monitor the microgravity conditions to ensure the required parameters for the experiment are met. The data recorded aboard the Shuttle will be compared with hypotheses on the subject.

Computer (Compact) Disc Evaluation Experiment (CDEE) will investigate the effects of the exosphere, the outer fringe region of the atmosphere of a planet, on the ability of discs to retain their information. Both computer discs are bit mapped, but only one is coated with a protective material. The compact discs are not coated at all. The discs aboard STS-87 will be compared with discs that have not been exposed to the exosphere to ascertain the results of the experiment. CDEE's objective is to find out if the information stored on such discs will be compromised with exposure to the exosphere. With CD-ROM's becoming the wave of the future, experimenters want to know if they can be trusted to retains its data in space.

The Asphalt Evaluation Experiment (AEE) is an investigation that will explore the effects of exposure to the exosphere on asphalt. Investigators hope the experiment will help determine better, more durable ways to make asphalt . The results of AEE will be compared with an asphalt sample not exposed to the exosphere to form a final conclusion.

The G-036 Mission Manager is Lee Shiflett at Goddard . The principal investigator is Emil J. Michal at El Paso Community College.

More information on GAS-036, is available on the Shuttle Small Payloads Project web site at http://sspp.gsfc.nasa.gov/g-036.htm

COLLABORATIVE UKRAINIAN EXPERIMENT (CUE)

The Collaborative Ukrainian Experiment (CUE) is a collection of 10 plant space biology experiments (five primary and five secondary) that will fly in Columbia's middeck during STS-87. Ukrainian Payload Specialist Cosmonaut Colonel Leonid Kadenyuk will perform the CUE experiments during the 16-day mission. CUE also features an educational component that involves evaluating the effects of microgravity on the pollination and fertilization of Brassica rapa (Wisconsin Fast Plants) seedlings. As many as 625,000 American students and teachers in the United States and a minimum of 20,500 Ukrainian students and teachers will perform experiments on the ground while Kadenyuk performs the flight experiments in space.

Of all resources available at this point in space exploration, plants are the only regenerative source of food for long-duration flight. Plants are also used for regeneration of oxygen, removal of carbon dioxide, and distillation of water by transpiration and condensation. It is critical to know how to grow plants in space in order to facilitate these human requirements.

Also, in order to better understand the effects of gravity on living systems, microgravity offers scientists an environment where they can analyze plant growth and functions without the influence of gravity.

As part of the CUE experiment, primary objectives include comparing changes in ultrastructure, biochemical composition and function induced by the spaceflight environment on the photosynthetic apparatus of Brassica rapa seedlings at different stages of vegetative development. Specifically, the principal scientists seek to discover what, if any, developmental events during plant reproduction fail to function normally in the microgravity environment.

Another objective of CUE is to compare pollination and fertilization processes in microgravity with ground controls. This should yield important information on pollen generation and maturation in microgravity, pollen-stigma interactions, pollen tube growth, fertilization and early embryo development.

Primary experiments to be performed on the mission in order to reach these objectives include Brassica rapa Photosynthetic Apparatus in Chamber (B-PAC) , Brassica rapa Seed Terminal growth In Chamber (B-STIC), Soybean Metabolism (SOYMET), Soybean - Pathogen Interactions (SOYPAT), and Space Moss Experiment (SPM), parts A and B. Secondary experiments include AMINO, Gene Expression Experiment (GENEX), LIPID, Phytohormonal Content Experiment (PHYTO), and ROOTS. CUE will use three different types of hardware during the mission to perform these experiments: the Plant Growth Facility, Biological Research in Canisters, and Biological Research in Canisters-Light Emitting Diode.

B-PAC and B-STIC utilize the Plant Growth Facility, SOYMET and SOYPAT use the Biological Research in Canisters, and SPM-A and SPM-B use the Biological Research In Canisters-Light Emitting Diode.

The remaining secondary experiments will use both the Plant Growth Facility and the Biological Research In Canisters flight hardware.

More detailed information on the CUE experiments can be found on the World Wide Web at *http://atlas.ksc.nasa.gov/education/general/cue.htm*

CUE - Teachers and Students Investigating Plants in Space (CUE-TSIPS)

During the STS-87 mission, high school students in the United States and Ukraine will perform special plant biology science experiments. Students will have the opportunity to view interactive downlinks with an astronaut who will conduct the experiment in microgravity on board the Space Shuttle Columbia.

The educational component of CUE, Teachers and Students Investigating Plants in Space, known as CUE-TSIPS, will allow students in the United States and Ukraine to perform pollination of the Brassica rapa plant on the ground, and the STS-87 crew will perform the same experiments with plants on board the Shuttle. Comparison of Shuttle and classroom results will continue after the mission via the Internet at the following URL:

http://fastplants.cals.wisc.edu/cue/cue.html

Through scheduled downlink sessions from the Shuttle, the crew will speak to the students and answer questions. The CUE-TSIPS educational activities focus on questions developed by U.S. and Ukrainian scientists. CUE-TSIPS is sponsored by NASA's Life Sciences Division and Education Division at NASA Headquarters.

STS-87 DEVELOPMENT TEST OBJECTIVES

DTO 312 – External tank (ET) thermal protection system (TPS) performance. Photographs will be taken of the external tank and solid rocket boosters after separation to determine TPS charring patterns, identify regions of TPS material spallation, evaluate overall TPS performance, and identify TPS or other problems that may pose a debris hazard to the orbiter. The camera is located on the flight deck (hand-held 300 mm Nikon). This DTO is required on each flight of each vehicle. This DTO has previously been manifested on 64 flights.

DTO 671 – EVA hardware for future scheduled EVA missions. Prior flight experience has revealed limitations in our ability to fully assess hardware operability during ground simulations or to predict on-orbit EVA performance with new and infrequently used hardware and/or associated techniques. The information collected will be used to modify hardware design and/or associated EVA techniques to increase the probability of success for future scheduled EVA missions. Required instrumentation and hardware include two extravehicular mobility units and flight-standard EVA tools and support equipment, videotape cassettes to cover the duration of the scheduled EVA, and an orbiter operational recorder to record crew comments after the EVA. This DTO is required on all flights in which an EVA can be accommodated on a noninterference basis with primary mission objectives. It has previously been manifested on 10 flights.

DTO 685 – On-board situational awareness displays for ascent and entry. This DTO will evaluate and test different hardware and software displays for usability and suitability during dynamic phases of flight. In addition, this DTO will demonstrate the capability of providing real-time advanced displays using the orbiter downlisted data stream from the pulse code master modulation unit (PCMMU) on ascent and entry. This is the first flight of DTO 685.

DTO 805 – Crosswind landing performance. This DTO will continue to gather data to demonstrate the capability to perform a manually controlled landing with a 90-degree, 10- to 15-knot steady-state crosswind. This DTO can be performed regardless of landing site or vehicle mass properties. Following a crosswind landing, the drag chute will be deployed after nose gear touchdown when the vehicle is stable and tracking the centerline. This DTO has previously been manifested on 53 flights.

DTO 844 – Remote manipulator system (RMS) situational awareness displays (RSAD). The objective of this DTO is to demonstrate the use of RSAD before it is used operationally on International Space Station assembly flights. RSAD will integrate information pertaining to RMS from various sources, such as PCMMU; the Canadian Space Vision System; the Johnson Space Center Vision System; and any other system that may be developed to determine the position and attitude of a payload. This is the third flight of DTO 844.

STS-87 DETAILED SUPPLEMENTARY OBJECTIVES

DSO 206 – Effect of space flight on bone and muscle. Space flight induces a negative calcium balance, a decrement of bone mineral content, and muscle atrophy; but the cause of bone loss and muscle atrophy in space is still unclear. The primary objective of this study is to investigate the basic mechanism of the effects of space flight on the musculoskeletal system in order to counter these effects during long-term space flight. The accumulation of these baseline data will lead to the development of countermeasures to reduce bone loss and muscle atrophy during long-term space flight.

DSO 331 – Interaction of the space shuttle launch and entry suit (LES) and sustained weightlessness on egress locomotion. Previous flight experience has shown that astronauts' energy expenditure increases when they move around while wearing the LES. The purpose of this DSO is to investigate the effect of the LES/advanced crew escape suit on egress locomotion and to directly assess the emergency egress capacity of crew members at wheel stop. Before beginning deorbit preparations, the crew members will instrument themselves with the egress monitor assembly, which measures oxygen consumption, body temperatures, heart rate, and ventilatory equivalent.

DSO 496 – Individual susceptibility to post-space flight orthostatic intolerance. The occurrence of post-space flight orthostatic hypotension in some, but not all, astronauts is contributed to by preflight, gender-related differences in autonomic regulation of arterial pressure, and by space flight-induced changes in autonomic function that precipitate orthostatic hypotension in predisposed individuals. This DSO will study the preflight and postflight differences in susceptible and nonsusceptible astronauts.

DSO 802 – Educational activities. This DSO has two objectives. The first is to produce educational products that will capture the interest of students and motivate them toward careers in science, engineering, and mathematics. These products will include video lessons with scenes recorded both on orbit and on the ground of educational activities performed by the flight crew. The second objective is to support the live television downlink of educational activities performed by the flight crew.

RISK MITIGATION EXPERIMENTS

RME 1309 - In-suit Doppler ultrasound for determining the risk of decompression sickness (DCS)during extravehicular activities. The overall objective of this RME is to evaluate the possibility of reduced prebreathe requirements for EVA, without compromising operational safety or increasing the risk of DCS to astronauts. The process will be defined in three steps: (1) develop an in-suit Doppler system to quantify the free gas phase in microgravity during EVA; (2) measure the incidence of microbubbles during operational EVA by using the in-suit Doppler ultrasound system; (3) conduct additional ground-based studies to evaluate risk of DCS with reduced prebreathe. This is the first flight of RME 1309.

RME 1323 - Autonomous EVA robotic (AER) camera/Sprint. Sprint is a small, unobtrusive free-flying camera platform for use outside the vehicle. It is spherical in shape, covered in soft cushioning material to prevent damage in the event of an impact, moves slowly, at approximately 0.15 fps, and is controlled from inside an intravehicular activity (IVA) cabin. The AER is an International Space Station (ISS) RME whose purpose is to assess the maneuverability and control of the free-flyer by the IVA pilot, assess the usefulness of a free-flying camera on orbit, and evaluate overall crew acceptance and work impact. This is the first flight of RME 1323.

RME-1332 - Space Station—test of portable computer system (TPCS) hardware. Portable computational devices and associated microelectronic equipment are often susceptible to on-orbit radiation, which can cause anomalies ranging from memory upsets to microcomponent failure. This RME will test the suitability of PCS hardware in an ISS radiation environment. This is the second flight of RME 1332.

STS-87 CREW BIOGRAPHIES

Kevin R. Kregel
STS-87 Mission Commander

PERSONAL DATA - Born September 16, 1956. Grew up in Amityville, New York. Married to the former Jeanne F. Kammer of Farmingdale, New York. They have four children. His parents, Alfred H. Kregel Jr., and Frances T. Kregel, are deceased.

EDUCATION - Graduated from Amityville Memorial High School, Amityville, New York, in 1974; received a bachelor of science degree in astronautical engineering from the U.S. Air Force Academy in 1978; master's degree in public administration from Troy State University in 1988.

SPECIAL HONORS - Air Force Meritorious Service Medal; Air Force Commendation Medal; Navy Commendation Medal; two NASA Space Flight Medals.

EXPERIENCE - Kregel graduated from the U.S. Air Force Academy in 1978, and earned his pilot wings in August 1979 at Williams Air Force Base, Arizona. From 1980 to 1983 he was assigned to F111 aircraft at RAF Lakenheath. While serving as an exchange officer flying A-6E aircraft with the U.S. Navy at NAS Whidbey Island, Seattle, and aboard the USS Kitty Hawk, Kregel made 66 carrier landings during a cruise of the Western Pacific. His next assignment was an exchange tour at the U.S. Naval Test Pilot School at Patuxent River, Maryland. Upon graduation he was assigned to Eglin AFB, Florida, conducting weapons and electronic systems testing on the F111, F15, and the initial weapons certification test of the F15E aircraft. Kregel resigned from active duty in 1990 in order to work for NASA. He has logged over 5,000 flight hours in 30 different aircraft.

NASA EXPERIENCE - In April 1990, Kregel was employed by NASA as an aerospace engineer and instructor pilot. Stationed at Ellington Field, Houston, Texas, his primary responsibilities included flying as an instructor pilot in the Shuttle Training Aircraft (STA) and conducting the initial flight test of the T38 avionics upgrade aircraft.

Selected by NASA in March 1992, Kregel reported to the Johnson Space Center in August 1992. He completed one year of training and qualified for assignment as a pilot on future Space Shuttle flight crews. Initially assigned to the Mission Support Branch of the Astronaut Office, Kregel served on the Astronaut Support Personnel team at the Kennedy Space Center in Florida supporting Space Shuttle launches and landings. A veteran of two space flights, Kregel has logged over 618 hours in space.

Kregel will command the crew of the fourth U.S. Microgravity Payload flight scheduled for an November 1997 launch on board Columbia on mission STS-87.

STS-70 launched from the Kennedy Space Center, Florida, on July 13, 1995, and returned there July 22, 1995. The five-member crew aboard Space Shuttle Discovery performed a variety of experiments in addition to deploying the sixth and final NASA Tracking and Data Relay Satellite. During this 8 day 22 hour mission, the crew completed 142 orbits of the Earth, traveling 3.7 million miles. STS-70 was the first mission controlled from the new combined control center.

STS-78 launched June 20, 1996 and landed July 7, 1996 becoming the longest Space Shuttle mission to date. The Life and Microgravity Spacelab mission served as a model for future studies onboard the International Space Station. The mission included studies sponsored by ten nations, five space agencies, and the crew included a Frenchman, a Canadian, a Spaniard and an Italian.

Steven W. Lindsey (Major, USAF)
STS-87 Pilot

PERSONAL DATA - Born August 24, 1960, in Arcadia, California. Considers Temple City, California, to be his hometown. Married to the former Diane Renee Trujillo. They have three children. He enjoys reading, water and snow skiing, scuba diving, windsurfing, camping, running, and racket sports. His parents, Arden and Lois Lindsey, reside in Arcadia, California. Her parents, Gene and Marcene Trujillo, reside in Temple City, California.

EDUCATION - Graduated from Temple City High School, Temple City, California, in 1978; received a bachelor of science degree in engineering sciences from the U.S. Air Force Academy in 1982, and a master of science degree in aeronautical engineering from the Air Force Institute of Technology in 1990.

ORGANIZATIONS - Member, Society of Experimental Test Pilots, USAF Academy Association of Graduates.

SPECIAL HONORS - Distinguished Graduate Air Force Undergraduate Pilot Training (1983). Distinguished Graduate and recipient of the Liethen-Tittle Award as the outstanding test pilot of the USAF Test Pilot School Class 89A (1989). Awarded Air Force Meritorious Service Medal, Air Force Commendation Medal, Air Force Achievement Medal and Aerial Achievement Medal.

EXPERIENCE - Lindsey was commissioned a second lieutenant at the United States Air Force Academy, Colorado Springs, Colorado, in 1982. In 1983, after receiving his pilot wings at Reese Air Force Base, Texas, he qualified in the RF-4C Phantom II and was assigned to the 12th Tactical Reconnaissance Squadron at Bergstrom Air Force Base, Texas. From 1984 until 1987, he served as a combat-ready pilot, instructor pilot, and academic instructor at Bergstrom. In 1987, he was selected to attend graduate school at the Air Force Institute of Technology, Wright-Patterson Air Force Base, Ohio, where he studied aeronautical engineering. In 1989, he attended the USAF Test Pilot School at Edwards Air Force Base, California. In 1990, Lindsey was assigned to Eglin Air Force Base, Florida, where he conducted weapons and systems tests in F-16 and F-4 aircraft. While a member of the 3247th Test Squadron, Lindsey served as the deputy director, Advanced Tactical Air Reconnaissance System Joint Test Force and as the squadron's F-16 Flight Commander. In August of 1993 Lindsey was selected to attend Air Command and Staff College at Maxwell Air Force Base, Alabama. Upon graduation in June of 1994 he was reassigned to Eglin Air Force Base, Florida as an Integrated Product Team leader in the USAF SEEK EAGLE Office where he was responsible for Air Force weapons certification for the F-16, F-111, A-10, and F-117 aircraft. In March of 1995 he was assigned to NASA as an astronaut candidate.

He has logged over 2700 hours of flying time in 49 different types of aircraft.

NASA EXPERIENCE - Selected by NASA in December 1994, Lindsey became an astronaut in May 1996, qualified for assignment as a pilot on future Space Shuttle flight crews. Initially assigned to flight software verification in the Shuttle Avionics Integration Laboratory (SAIL), Lindsey also served as the Astronaut Office representative working on

the Multifunction Electronic Display System (MEDS) program, a glass cockpit Space Shuttle upgrade program, as well as a number of other advanced upgrade projects.

He will serve as pilot on the crew of the fourth U.S. Microgravity Payload flight scheduled for an November 1997 launch on board Columbia on mission STS-87.

Kalpana Chawla (Ph.D.)
STS-87 Mission Specialist

PERSONAL DATA - Born in Karnal, India. Dr. Chawla enjoys flying, hiking, back-packing, and reading. She holds Certificated Flight Instructor's license and Commercial Pilot's licenses for single- and multi-engine land airplanes and single-engine seaplanes, instrument rating, and Private Glider. She enjoys flying aerobatics and tail-wheel airplanes.

EDUCATION - Graduated from Tagore School, Karnal, India, in 1976. Bachelor of science degree in aeronautical engineering from Punjab Engineering College, India, 1982. Master of science degree in aerospace engineering from University of Texas, 1984. Doctorate of philosophy in aerospace engineering from University of Colorado, 1988.

EXPERIENCE - Dr. Chawla was hired by MCAT Institute, San Jose, California, as a Research Scientist to support research in the area of powered lift at NASA Ames Research Center, California, in 1988. She was responsible for simulation and analysis of flow physics pertaining to the operation of powered lift aircraft such as the Harrier in ground effect. She modeled and numerically simulated configurations that include important components of realistic powered lift aircraft, both in hover and landing mode, using Navier-Stokes solvers on Cray YMP. Following completion of this project she supported research in mapping of flow solvers to parallel computers such as the Intel iPSC-860, the Intel Paragon, and the TMC CM-2, and testing of these solvers by carrying out powered lift computations. In 1993 Dr. Chawla joined Overset Methods Inc., Los Altos, California, as Vice President and Research Scientist to form a team with other researchers specializing in simulation of moving multiple body problems. She was responsible for development and implementation of efficient techniques to perform aerodynamic optimization. Results of various projects that Dr. Chawla participated in are documented in technical conference papers and Journals.

NASA EXPERIENCE - Selected by NASA in December 1994, Dr. Chawla reported to the Johnson Space Center in March 1995. After completing a year of training and evaluation, she was assigned to work technical issues for the Astronaut Office EVA/Robotics and Computer Branches. Dr. Chawla will serve as a mission specialist on the crew of the fourth U.S. Microgravity Payload flight scheduled for an November 1997 launch on board Columbia on mission STS-87.

Winston E. Scott (Captain, USN)
STS-87 Mission Specialist

PERSONAL DATA - Born August 6, 1950, in Miami, Florida. Married to the former Marilyn K. Robinson.

They have two children. He enjoys martial arts and holds a 2nd degree black belt in Shotokan karate. He also enjoys music, and plays trumpet with a Houston-based Big Band. In addition to flying general aviation aircraft, he is an electronics hobbyist.

Winston's father, Alston Scott, resides in Miami, Florida. His mother, Rubye Scott, is deceased. Marilyn's parents, Albert and Josephine Robinson, reside in Chipley, Florida.

EDUCATION - Graduated from Coral Gables High School, Coral Gables, Florida, in 1968; received a bachelor of arts degree in music from Florida State University in 1972; a master of science degree in aeronautical engineering from the U.S. Naval Postgraduate School in 1980.

ORGANIZATIONS - American Institute of Aeronautics & Astronautics; National Naval Officers Association; Naval Helicopter Association; Alpha Phi Alpha Fraternity; Phi Mu Alpha Sinfonia Fraternity; Skotokan Karate Association; Association of International Tohgi Karate-Do; Bronze Eagles Association of Texas.

EXPERIENCE - Scott entered Naval Aviation Officer Candidate School after graduation from Florida State University in December 1972. He completed flight training in fixed-wing and rotary-wing aircraft and was designated a Naval Aviator in August 1974. He then served a 4-year tour of duty with Helicopter Anti-Submarine Squadron Light Thirty Three (HSL-33) at the Naval Air Station (NAS) North Island, California, flying the SH-2F Light Airborne Multi-Purpose System (LAMPS) helicopter. In 1978 Scott was selected to attend the Naval Postgraduate School at Monterey, California, where he earned his master of science degree in aeronautical engineering with avionics. After completing jet training in the TA-4J Skyhawk, Scott served a tour of duty with Fighter Squadron Eighty Four (VF-84) at NAS Oceana, Virginia, flying the F-14 Tomcat. In June 1986 Scott was designated an aerospace engineering duty officer.

He served as a production test pilot at the Naval Aviation Depot, NAS Jacksonville, Florida, flying the F/A-18 Hornet and the A-7 Corsair aircraft. He was also assigned as Director of the Product Support (engineering) Department which consisted of 242 engineers, technicians, logistics managers, and administrative personnel. He was next assigned as the Deputy Director of the Tactical Aircraft Systems Department at the Naval Air Development Center at Warminster, Pennsylvania. As a research and development project pilot, he flew the F-14, F/A-18 and A-7 aircraft. Scott has accumulated more than 3,000 hours of flight time in 20 different military and civilian aircraft, and more than 200 shipboard landings. Additionally, Scott was an associate instructor of electrical engineering at Florida A&M University and Florida Community College at Jacksonville, Florida.

NASA EXPERIENCE - Scott was selected by NASA in March 1992, and reported to the Johnson Space Center in August 1992. He was initially assigned to the Astronaut Office Mission Support Branch, serving with the Astronaut Support Personnel team supporting Space Shuttle launches and landings at the Kennedy Space Center in Florida. Most recently, Scott served as a mission specialist on STS-72 (January 11-20, 1996).

During the 9-day flight the crew aboard Endeavour retrieved the Space Flyer Unit (launched from Japan 10-months earlier), deployed and retrieved the OAST-Flyer, and conducted two spacewalks to demonstrate and evaluate techniques to be used in the assembly of the International Space Station. In completing his first space flight, Scott orbited the Earth 142 times, traveled 3.7 million miles, and logged a total of 214 hours and 41 seconds in space, including a spacewalk of 6 hours and 53 minutes. Scott will serve as a mission specialist on the crew of the fourth U.S. Microgravity Payload flight scheduled for an November 1997 launch on board Columbia on mission STS-87.

Takao Doi (Ph.D.)
STS-87 Mission Specialist

PERSONAL DATA - Born September 18, 1954 in Minamitama, Tokyo, Japan. Married to the former Hitomi Abe of Toukamachi, Niigata, Japan. He enjoys flying, soaring, playing tennis, jogging, soccer, and observing stars as an amateur astronomer.

EDUCATION - Graduated from Ousaka-phu, Mikunigaoka High School in 1973. Bachelor of engineering degree from University of Tokyo, 1978. Master of engineering degree from University of Tokyo, 1980. Doctorate in aerospace engineering from University of Tokyo, 1983.

ORGANIZATIONS - The Japan Society of Microgravity Application, the Japan Society for Aeronautical and Space Science, American Institute of Aeronautics and Astronautics.

SPECIAL HONORS - Received Minister of State for Science and Technology's Commendation, Science Council of Japan's Special Citation, and National Space Development Agency of Japan's Outstanding Service Award in 1992.

EXPERIENCE - Takao Doi studied space propulsion systems as a research student in the Institute of Space and Astronautical Science in Japan from 1983 to 1985. He worked for the National Aeronautics and Space Administration (NASA) Lewis Research Center as a National Research Council research associate in 1985.

He joined the National Space Development Agency (NASDA) of Japan in 1985 and has been working in the Japanese manned space program since then. He conducted research on microgravity fluid dynamics at the University of Colorado from 1987 to 1988, and at National Aerospace Laboratory in Japan in 1989 as a visiting scientist.

In 1992, he served as a backup payload specialist for the Spacelab Japan mission (STS-47). In 1994, he worked as a project scientist on the International Microgravity Laboratory 2 mission (STS-65).

NASA EXPERIENCE - Dr. Doi was selected by NASDA in 1985. He participated in payload specialist training from 1990 to 1992 in preparation for the Spacelab Japan mission. He reported to the Johnson Space Center in March 1995. On completing a year of training and evaluation he was assigned technical duties in the Vehicle Systems/Operations Branch of the Astronaut Office. Dr. Doi will serve as a mission specialist on the crew of the fourth U.S. Microgravity Payload flight scheduled for an November 1997 launch on board Columbia on mission STS-87. During the 16-day mission Dr. Doi will become the first Japanese astronaut to conduct a spacewalk.

Leonid K. Kadenyuk
STS-87 Payload Specialist

PERSONAL DATA - Born January 28, 1951, in the Chernivtsi region of Ukraine. Married to Vera Kadenyuk (nee Kosolapinkova). They have two sons. He enjoys family time, running, athletics.

EDUCATION - Graduated from secondary school in 1967, from the Chernihiv Higher Aviation School in Chernihiv, Ukraine, in 1971, and from GNIKI VVS USSR (State Scientific Research Institute of the Russian Air Forces Center for test pilot training) in 1977, and the Yuri Gagarin Cosmonaut Training Center in 1978. He earned a master of science in mechanical engineering from the Moscow Aviation Institute, Department of Aircraft Construction, Moscow, Russia, in 1989.

EXPERIENCE - Colonel Kadenyuk has been a member of the USSR Cosmonaut Team since 1976. He underwent complete engineering and flight training for Soyuz, Soyuz-TM, orbital station Salyut, orbital complex Mir, including special training as a commander of Buran reentry space vehicle. He has flown 54 different types and modifications of aircraft, has logged more than 2400 hours flying time, and holds the qualifications of Test Pilot, 1st Class, and Military Pilot, 2nd Class, and Test Pilot. As a pilot-instructor he was responsible for the graduation of fifteen students.

In 1971, he graduated from Chernihiv Higher Aviation School, Chernihiv, Ukraine, as a pilot-engineer. In 1976 he was selected to join the cosmonaut team at Yuri Gagarin Cosmonaut Training Center, Star City, Moscow, Russia. He attended test pilot training at GNIKI VVS USSR (State Scientific Research Institute of the Russian Air Force). He graduated in 1977, proficient in test aircraft piloting, aerodynamics, aircraft construction and exploitation. The following year, was spent at the Yuri Gagarin Cosmonaut Training Center where he successfully completed general space training. The course included biology, ecology, medicine, meteorology, space geology and geobotany. As a Test Cosmonaut he is trained to perform scientific research, tests and experiments in any of the above-named disciplines, both in-flight and on the ground.

From 1978-1983 he served as a Test Cosmonaut/Pilot in the Multiple Usage Space System Group at the Yuri Gagarin Cosmonaut Training Center. While there he underwent advanced training in the conduct of in-flight scientific experiments. He is trained in survival techniques, EVA activities, and work in simulated weightlessness.

He was involved in experimental investigations and testing of space technology for the Buran reentry vehicle system. He has performed numerous sky dives including some live, in-flight, reporting.

From 1984-1988 he was a Test Pilot at GLIC VVS Russia (former GNIKI VVS USSR) Russian State Test Flight Center, Russian Air Force. During that time, he performed test flights for three State airplane tests on the SU-27, SU-27UB and MIG-25, was promoted to 1st Class Pilot, flight tested the SU-27, MIG-23, MIG-25, MIG-27 and MIG-31 military spacecraft, and performed tests in lowering and landing the "Buran" space ship on MIG-31 and MIG-25.

In 1985, he served as Chairman of the State Committee on SU-27M cockpit design.

In 1990, following the Ukrainian-USSR State Agreement on a Collaborative Space Program, he was appointed to command the Ukrainian space crew. In the following two years, he trained to command Soyuz-TM-S during its docking with unmanned Buran and Mir station (mission was canceled due to financial difficulties), completed the full course of space training for a commander of the SOYUZ-TM, and also took the full course of manual docking of space ships, using special training equipment. In subsequent years, he underwent engineering and flight training courses as commander of the Buran Space System. Using MIG-31 and MIG-25 he mastered and improved the trajectory for lowering and landing the Buran spacecraft.

In 1996, he transferred to the Institute of Botany, National Academy of Sciences of Ukraine, Kyiv, as a scientific investigator developing the collaborative Ukrainian-American experiment in space biology.

NASA EXPERIENCE - Colonel Kadenyuk is one of the first NSAU Astronaut group selected in 1996 by the National Space Agency of Ukraine. In November 1996, NSAU and NASA assigned him to be one of two payload specialists for the Collaborative Ukrainian Experiment (CUE) to be flown on STS-87 aboard Space Shuttle Columbia. He currently participates in payload specialist training at the Johnson Space Center and will serve as the prime payload specialist for STS-87, scheduled for launch in November 1997.

NewsRelease

National Aeronautics and
Space Administration

Washington, D.C. 20546
(202) 358-1600

For Release

Debra Rahn/Jennifer McCarter
Headquarters, Washington, DC
(Phone: 202/358-1639)

November 3 , 1997

Ed Campion
Johnson Space Center, Houston, TX
(Phone: 281/483-5111)

NOTE TO EDITORS: N97-81

BRIEFINGS SET FOR FINAL SHUTTLE MISSION OF 1997

A series of briefings on the upcoming flight of Space Shuttle Columbia on Mission STS-87 will be held on Wednesday, Nov. 12, 1997. The STS-87 mission, the eighth and final Shuttle flight of the year, will include observations of the Sun's outer atmospheric layers, experiments to study how the weightless environment of space affects various physical processes and a spacewalk to rehearse future International Space Station operations.

The briefings will begin on Nov. 12 at 9 a.m. EST (all times listed are EST) with a Mission Overview briefing conducted by STS-87 Lead Flight Director Bill Reeves at the Johnson Space Center (JSC), Houston, TX. At 10 a.m., a United States Microgravity Payload briefing will originate from NASA's Marshall Space Flight Center (MSFC), Huntsville, AL. NASA's Goddard Space Flight Center (GSFC), Greenbelt, MD, will host a Spartan payload briefing at 11 a.m. followed by the daily NASA Video File at noon.

The briefings will then resume from the Kennedy Space Center (KSC), FL, at 12:30 p.m. with a presentation on the Collaborative Ukrainian Experiment (CUE). Activities and objectives associated with a planned spacewalk on the sixth day of the mission will be discussed at a briefing from JSC starting at 1:30 p.m. The briefings will return to GSFC at 3 p.m. for a presentation of the Hitchhiker and Get Away Special experiments that will fly in the cargo bay of Columbia. The briefings will wrap up with the STS-87 Crew News Conference at 5 p.m.

All of the STS-87 briefings will be carried on NASA Television which is available through the GE2 satellite system, located on Transponder 9C, at 85 degrees West longitude, frequency 3880.0 MHz, audio 6.8 MHz.

-more-

STS-87 PRE-FLIGHT BRIEFINGS (All Times EST)

9 a.m. - 10 a.m. **STS-87 MISSION OVERVIEW** (JSC)
Bill Reeves, STS-87 Lead Flight Director

10 a.m.-11 a.m. **USMP-4** (MSFC)
Joel Kearns, Microgravity Research Program Manager
Sherwood Anderson, USMP-4 Mission Manager
Dr. Peter Curreri, USMP-4 Mission Scientist
Dr. Martin (Marty) Glicksman, Principal Investigator, IsothermalDendritic Growth Experiment (IDGE), Rensselaer Polytechnic Institute,
Troy, NY
Dr. Doru Stefanescu, Principal Investigator, Particle Engulfment and Pushing by a Solid/Liquid Interface PEP (MGBX), Univ. of Alabama, Tuscaloosa

11 a.m. - noon **SPARTAN** (GSFC)
Craig Tooley - Spartan 201-04 Mission Manager, GSFC
Dr. Richard Fisher - White Light Coronograph, GSFC
Dr. Leonard Strachan, Ultraviolet Coronal Spectrometer, Smithsonian Astrophysical Observatory, Cambridge, MA
Gene Beam - Project Manager, Auto Rendezvous & Docking Experiment, MSFC

12 noon **NASA Video File** (HQ)

12:30 p.m. - 1:30 p.m. **Collaborative Ukrainian Experiment (CUE)** (KSC)
Dr. Bill Knott, CUE Mission Scientist, KSC
Cindy Martin, CUE Mission Manager

1:30 p.m. - 3 p.m. **EVA / AERCam / SPRINT Briefing** (JSC)
Mike Hess, STS-87 EVA Officer
Cliff Hess, AERCam Project

3 p.m. - 3:45 p.m. **STS-87 GAS/HITCHIKER PAYLOADS** (GSFC)
Tammy Brown, SOLSE Payload Manager, GSFC
Lee Shiflett, Get Away Special Manager, GSFC
Dr. Ruthan Lewis, Hitchhiker Mission Manager, GSFC

5 p.m. - 6 p.m. **STS-87 Crew News Conference** (JSC)
Kevin Kregel, Commander
Steve Lindsey, Pilot
Kalpana Chawla, Mission Specialist 1
Winston Scott, Mission Specialist 2
Takao Doi, Mission Specialist 3
Leonid Kadenyuk, Payload Specialist 1

-end-

News Release

National Aeronautics and
Space Administration
Washington, DC 20546
(202) 358-1600

For Release

Peggy Wilhide
Headquarters, Washington, DC
(Phone: 202/358-1898)

November 3, 1997

Roderic Olvera Young
Headquarters, Washington, DC
(Phone: 202/358-4726)

NOTE TO EDITORS: N97-82

NASA ADMINISTRATOR TO ADDRESS ECONOMIC CLUB OF DETROIT

NASA Administrator Daniel S. Goldin will address The Economic Club of Detroit at Cobo Center on Tuesday, Nov. 4, 1997, at noon EST. The speech, "Bringing NASA Successes Back to Earth," will explain how NASA's space-based research promises revolutionary benefits for our nation's industries and for our daily lives.

Media also are invited to attend a question-and-answer session prior to Goldin's speech at the Cobo Center in Room W1-53. In the afternoon, Goldin will visit two organizations, "Focus: Hope" and "Energy Conversion Devices, Inc."

Media Availability
11 a.m. EST, Tuesday, Nov. 4, 1997
W1-53 Cobo Center

Address Before the Economic Club of Detroit
Noon EST, Tuesday, Nov. 4, 1997
W1-54 Cobo Center

Visit to Focus: Hope
Twenty-eight-year-old non-profit organization helping to fight racism, poverty and injustice in one of Detroit's most economically distressed communities.
2 p.m. to 4:15 p.m. EST
1355 Oakman Boulevard
Detroit, MI
(313) 494-5500

-more-

Visit to Energy Conversion Devices
Research and development facility for high efficiency solar cells.
5:30 p.m. to 6:15 p.m. EST
1675 West Maple Road
Troy, MI
(248) 280-1900

-end-

Video Advisory

National Aeronautics and
Space Administration

Washington, DC 20546
(202) 358-1600

For Release
Nov. 3, 1997

Debbie Rivera
Headquarters, Washington, DC
(Phone: 202/358-1743)

VIDEO ADVISORY: V97-109

LASRE: PIGGYBACK RIDE; PATHFINDER: SCIENCE FLIES OVER HAWAII

Today's video package features footage of a NASA SR-71 that successfully completed its first flight on Oct. 31, as part of the NASA/Rocketdyne/Lockheed Martin Linear Aerospike SR-71 Experiment (LASRE). Also on NTV is video of NASA's solar-powered, remotely-piloted aircraft, Pathfinder, which has begun a series of flights to highlight the aircraft's science capabilities while collecting imagery of Kauai, HI.

ITEM 1: LASRE PIGGYBACK
B-roll of engine and mating to the SR-71.

For more information contact Jim Cast at (202) 358-1779 or Kirsten Williams at (805) 258-3449.

ITEM 2: PATHFINDER OVER HAWAII
Footage of the solar-powered aircraft.

For more information contact Dwayne Brown at (202) 358-1726 or Michael Mewhinney at (415) 604-3937.

Video news file today at noon, 3, 6, 9 p.m. and midnight EDT.

NASA Television is available on GE-2, transponder 9C at 85 degrees West longitude, with vertical polarization. Frequency is on 3880.0 megahertz, with audio on 6.8 megahertz.

-end-

NewsRelease

National Aeronautics and
Space Administration

Washington, D.C. 20546
(202) 358-1600

For Release

Beth Schmid
Headquarters, Washington, DC
(Phone: 202/358-1760)

November 3, 1997

RELEASE: 97-252

NASA RESEARCHER RECEIVES PRESIDENTIAL EARLY CAREER AWARD

Todd T. Schlegel, M.D., a research physician at NASA's Johnson Space Center, Houston, TX, is among 60 young researchers to receive the second annual Presidential Early Career Award for Scientists and Engineers today at the White House. This award is the highest honor bestowed by the United States government on outstanding scientists and engineers at the beginning of their careers.

The Presidential Awards were established by President Clinton in February 1996 to recognize young scholars, their research contributions, their promise, and their commitment to broader societal goals.

Schlegel's research will study the relationship between changes in vestibular function due to change in gravity and deficits in autonomic cardiovascular control. His research may provide new information that will be important to the space program and to biomedical research for patients on Earth.

Ten government agencies join together annually to nominate promising scientists and engineers for the awards. Those selected receive up to $500,000 over a five-year period to further their research and to broadly advance science for important government missions.

Schlegel earned his B.S. degree and M.D. from the University of Minnesota, Minneapolis/St. Paul, and completed his residency at the Mayo Clinic, Rochester, NY. Since 1992, he has been a research physician at Johnson's Space Biomedical Research Institute, Cardiovascular Laboratory.

-end-

News Release

National Aeronautics and
Space Administration

Washington, DC 20546
(202) 358-1600

For Release

November 3, 1997

Dwayne Brown
Headquarters, Washington, DC
(Phone: 202/358-1726)

Michael Mewhinney
Ames Research Center, Moffett Field, CA
(Phone: 415/604-3937)

Fred A. Brown
Dryden Flight Research Center, Edwards, CA
(Phone: 805/258-3449)

Eric Dunn
Pacific Missile Range Facility, Kekaha, Kauai, HI
(Phone: 808/335-4560)

RELEASE: 97-253

NASA'S SOLAR-POWERED AIRCRAFT BEGINS SCIENCE MISSIONS IN HAWAII

Pathfinder, NASA's solar-powered, remotely piloted aircraft, has begun conducting a series of up to four science mission flights to highlight the aircraft's science capabilities while collecting imagery of forest and coastal zone ecosystems on Kauai, HI.

Remotely piloted aircraft similar to Pathfinder could spend long periods of time over the ocean, monitoring storm developments to provide more accurate predictions of hurricanes. These aircraft also could be used to monitor major croplands, forests and other large, remote expanses to provide early warning of crop damage or fires.

The Pacific Missile Range Facility at Barking Sands, Kauai, is the staging base for these flights as part of NASA's Environmental Research Aircraft and Sensor Technology (ERAST) program, based at NASA's Dryden Flight Research Center, Edwards, CA. Kauai was chosen as an optimum location for testing Pathfinder due to high levels of solar irradiance, available airspace and radio frequency, and diversity of terrestrial and coastal ecosystems.

-more-

Major science activities of Pathfinder, the first flight of which occurred on Oct. 25, include detection of forest nutrient status, forest regrowth from Hurricane Iniki, sediment/algal concentrations in coastal waters and assessment of coral reef health. The science activity is being coordinated by NASA's Ames Research Center, Moffett Field, CA, and involves researchers at the University of Hawaii and University of California. The flights will conclude just before Thanksgiving.

The flights will test two new scientific instruments, a high spectral resolution Digital Array Scanned Interferometer (DASI) and a high spatial resolution Airborne Real-Time Imaging System (ARTIS). The remote sensor payloads were designed by Ames to support NASA's Mission to Planet Earth science programs. The flights will be conducted at altitudes between 22,000-49,000 feet.

"This will be the first time that we have flown these two new sensor systems," said Steve Wegener, Ames' manager of the payloads and science element of the program.

DASI, a remote sensing instrument that looks at reflected spectral intensities from the Earth, will be used to study such things as plant stress, constituents in coastal zone waters and coral reef health. Measuring 30 inches long and ten inches in diameter, DASI weighs less than 25 pounds and mounts beneath Pathfinder's wing.

The ARTIS payload is built around a digital camera, which has a six-million-pixel array, enabling it to take high quality digital photographs. The camera has a variety of potential science and commercial applications, such as documenting flood surges, geologic features and crop stress, according to Wegener.

Both sensors are designed to be small, lightweight and interactive, in compliance with ERAST program goals of miniaturizing flight payloads. "These new sensor technologies are being developed for use in the next generation of remotely piloted aircraft," Wegener said. These and other new sensor systems are designed to complement high altitude studies of atmospheric ozone, land-cover change and natural hazard studies conducted by NASA's Earth Resources Survey aircraft.

Pathfinder recently set an altitude record for propeller-driven flight of over 71,500 feet. "Pathfinder's performance to date has exceeded our wildest expectations," said the program's manager Jenny Baer-Riedhart. "We beat our altitude milestone by 6,500 feet in the first two flights this summer and demonstrated the capability for science mission demonstrations in a remote, tropical location."

Pathfinder is one of several remotely piloted aircraft being evaluated under the ERAST program. The program focuses on developing technologies required to operate subsonic unpiloted aircraft at high altitude for long-duration flights.

"Remotely piloted aircraft have the potential to do the dull, dirty and dangerous missions where you wouldn't want to put a pilot at risk," Wegener said.

Pathfinder is a flying wing with a span of 99 feet. Small pods extending below the wing's center section can carry a variety of scientific sensors. Solar arrays on the upper wing surface can provide as much as 7,200 watts of power at high noon on a summer day to power the craft's six electric motors and other electronic systems. A backup battery system can provide power for up to five hours to fly the craft after sundown. Pathfinder was designed, manufactured and is operated by AeroVironment, Inc., of Simi Valley, CA, under a jointly sponsored research agreement with NASA.

-end-

Video Advisory

National Aeronautics and
Space Administration
Washington, DC 20546
(202) 358-1600

For Release
Nov. 5, 1997

Renee Juhans
Headquarters, Washington, DC
(Phone: 202/358-1712)

VIDEO ADVISORY: V97-110

THE SUN'S MAGNETIC CARPET RIDE; IO'S ERUPTION THE SIZE OF ARIZONA

Today's video package features new findings that are a likely solution to one of the major mysteries of the Sun. NASA scientists have observed the "Sun's magnetic carpet," from the European Space Agency/NASA Solar and Heliospheric Observatory (SOHO) mission, which provides evidence for the upward transfer of magnetic energy from the Sun's surface toward the corona above. Also on NTV is an image of Jupiter's volcanic moon, Io, captured by NASA's Galileo spacecraft that shows the results of a dramatic event that occurred on the fiery satellite during a five-month period.

ITEM 1: MAGNETIC CARPET FLY-IN
ITEM 1a: ENIGMA OF THE CORONA
ITEM 1b: DAY IN THE LIFE OF THE SUN
ITEM 1c: MODEL OF MAGNETIC POLAR PAIRS
ITEM 1d: CLOSE-UP VIEW -- MAGNETIC CELLS
ITEM 1e: MDI -- CDS
ITEM 1f: INTERVIEW - DR. ALAN TITLE, CO-DIRECTOR, STANFORD-LOCKHEED INSTITUTE FOR SPACE RESEARCH
For more information contact Don Savage at (202) 358-1727 or Wade Sisler at (301) 286-6256.
ITEM 2: ARIZONA-SIZED IO ERUPTION
For more information contact Doug Isbell at (202) 358-1753 or Stephanie Zeluck at (818) 354-5011.
ITEM 3: REPLAY - DAVID WOLF INTERVIEW
ITEM 3a: REPLAY - DAVID WOLF HIGHLIGHTS
ITEM 4: REPLAY - SPUTNIK.....40 YEARS LATER
ITEM 5: REPLAY - SPOTLIGHT ON MARS PATHFINDER

Video news file today at noon, 3, 6, 9 p.m. and midnight EST.

NASA Television is available on GE-2, transponder 9C at 85 degrees West longitude, with vertical polarization. Frequency is on 3880.0 megahertz, with audio on 6.8 megahertz.

-end-

News Release

National Aeronautics and
Space Administration

Washington, DC 20546
(202) 358-1600

For Release

Jim Cast
Headquarters, Washington, DC
(Phone: 202/358-1779)

November 5, 1997

Dom Amatore
Marshall Space Flight Center, Huntsville, AL
(Phone: 205/544-0031)

Ron Lindeke
Lockheed Martin Skunk Works, Palmdale, CA
(Phone: 805/572-4153)

RELEASE: 97-254

NASA COMPLETES X-33 ENVIRONMENTAL IMPACT STATEMENT PROCESS

NASA yesterday completed its Record of Decision (ROD) on the X-33 Environmental Impact Statement (EIS), announcing it intends to proceed with the preferred X-33 flight test program as described in the Final EIS issued Oct. 3.

Signing of the decision document yesterday by Dr. Robert E. Whitehead, NASA Associate Administrator for Aeronautics and Space Transportation Technology, concludes a 12-month EIS process of assessing the development and flight test of the X-33, a subscale technology demonstrator prototype of a Reusable Launch Vehicle.

All 15 test flights of the X-33 will be conducted from the launch site at Haystack Butte on the eastern portion of Edwards Air Force Base, CA, to landing sites at Michael Army Air Field, Dugway Proving Ground, UT, and Malmstrom Air Force Base near Great Falls, MT.

A third landing site, Silurian Lake, a dry lake bed near Baker, CA, had been considered for use as a short-range landing site. However, flights into Dugway's airfield some 450 miles from Edwards better match the initial flight demonstration requirements.

The X-33 environmental study considered issues such as public safety, noise, impacts on general aviation, and effects on biological, natural and other resources. Two launch sites and five landing sites were evaluated for potential use. The final decision on a flight test program was based on programmatic, technical, and other considerations as well as environmental factors. Overall, environmental impacts of the program are expected to be low at all operational sites.

-more-

Now that the environmental process for the X-33 has been completed, the next major program milestone is groundbreaking for the launch facility at Edwards Air Force Base. Construction crews are scheduled to begin work this week. Construction is scheduled to be completed within a year.

The X-33 is being developed under a cooperative agreement between NASA and Lockheed Martin Skunk Works, Palmdale, CA, which began July 2, 1996.

NASA has budgeted $941 million for the X-33 program through 1999. Lockheed Martin will invest at least $212 million in the X-33 program.

The X-33 is a sub-scale technology demonstrator prototype of a Reusable Launch Vehicle, which Lockheed Martin has named "Venture Star (tm)," and which the company hopes to develop early in the next century. Through demonstration flights and ground research, the X-33 will provide information needed for industry to decide by the year 2000 whether to proceed to the development of a full-scale, commercial single-stage-to-orbit reusable launch vehicle.

- end -

NOTE TO EDITORS: The two-volume Final Environmental Impact Statement is available on the Internet at URL (approximately 1,025 pages with appendices):

http://eemo.msfc.nasa.gov/eemo/x33_eis

An electronic version of the 45-page executive summary is available at (1 MB file in Portable Document Format):

http://eemo.msfc.nasa.gov/eemo/x33_eis/x-33_pdf/executive_summary.pdf

Print versions of the document are available for review in the NASA Headquarters and Marshall Space Flight Center newsrooms.

News Release

National Aeronautics and
Space Administration

Washington, DC 20546
(202) 358-1600

For Release

November 6, 1997

Donald Savage
Headquarters, Washington, DC
(Phone: 202/358-1547)

Bill Steigerwald
Goddard Space Flight Center, Greenbelt, MD
(Phone: 301/286-5017)

RELEASE: 97-258

FIRST OBSERVATION OF SPACE-TIME DISTORTION BY BLACK HOLES

Astronomers using NASA's Rossi X-ray Timing Explorer (RXTE) spacecraft reported today that they have observed a black hole that is literally dragging space and time around itself as it rotates. This bizarre effect, called "frame dragging," is the first evidence to support a prediction made in 1918 using Einstein's theory of relativity.

The phenomenon is distorting the orbit of hot, X-ray emitting gas near the black hole, causing the X-rays to peak at periods that match the frame-dragging predictions of general relativity. The research team, led by Dr. Wei Cui of the Massachusetts Institute of Technology, is announcing its results in a press conference today during the American Astronomical Society's High Energy Astrophysics Division (HEAD) meeting in Estes Park, CO. Collaborators in the research include Dr. Wan Chen of NASA's Goddard Space Flight Center, Greenbelt, MD, and Dr. Shuang N. Zhang of NASA's Marshall Space Flight Center, Huntsville, AL.

"If our interpretation is correct, it could demonstrate the presence of frame dragging near spinning black holes," said Cui. "This observation is unique because Einstein's theory has never been tested in this way before."

Black holes are very massive objects with gravitational fields so intense that near them, nothing, not even light, can escape their pull. This effect shrouds the hole in darkness, and its presence can only be inferred from its effects on nearby matter. Many of the known or suspected black holes are orbiting a close "companion" star. The black hole's gravity pulls matter from the companion star, which forms a disk around the black hole as it is drawn inward by the black hole's gravity, much like soap suds swirling around a bathtub drain. Gas in this disk gets compressed and heated and emits radiation of various kinds, especially X-rays.

- more -

The research team used these X-ray emissions to determine if frame dragging was present. The team found that the X-ray emissions were varying in intensity. By analyzing this variation, they found a pattern, or repetition, that was best explained by a perturbation in the matter's orbit. This perturbation, called a precession, occurs when the orbit itself shifts around the black hole. This is evidence for frame dragging because as the matter orbits the black hole, the space-time that is being dragged around the black hole drags the matter along with it. This shifts the matter's orbit with each revolution.

Einstein's Theory of General Relativity has been highly successful at explaining how matter and light behaves in strong gravitational fields, and has been successfully tested using a wide variety of astrophysical observations. The frame-dragging effect was first predicted using general relativity by Austrian physicists Joseph Lense and Hans Thirring in 1918. Known as the Lense-Thirring effect, it has not been definitively observed thus far, so scientists will scrutinize the new reports very carefully.

The possible detection of frame dragging around another type of very dense, quickly spinning objects, called neutron stars, was accomplished very recently by Italian astronomers, whose work led Dr. Cui's team to seek the effect near black holes. The Italians, Drs. Luigi Stella of the Astronomical Observatory of Rome, and Mario Vietri of the Third University of Rome, will report their findings at the November 6 conference in Estes Park. These observations also were made using the RXTE, which is available for use by astronomers throughout the world.

"This is exciting work that needs further confirmation, as for any seemingly major advance in science," said Dr. Alan Bunner, Director of the Structure and Evolution of the Universe Program at NASA Headquarters, Washington, DC.

The RXTE spacecraft is a 6,700 pound observatory placed into orbit by NASA in December 1995. Its mission is to make astronomical observations from high-energy light in the X-ray range, which is emitted by powerful events in the universe. These events are often associated with massive, compact objects such as black holes and neutron stars.

- end -

NOTE TO EDITORS: Computer animation and background video to illustrate this story is available and will be broadcast on NASA TV Videofile Nov. 6.

News Release

National Aeronautics and
Space Administration
Washington, DC 20546
(202) 358-1600

For Release

Michael Braukus
Headquarters, Washington, DC
(Phone: 202/358-1979)

November 6, 1997

Steve Roy
Marshall Space Flight Center, Huntsville, AL
(Phone: 205/544-0034)

RELEASE: 97-259

SPACE RESEARCH SHINES A LIGHT ON TUMORS TO SAVE LIVES

Special lighting technology developed for NASA's commercial plant growth experiments in space may help treat cancerous brain tumors in children.

A treatment technique called photodynamic therapy is using tiny pinhead-size Light Emitting Diodes (LEDs) -- developed for NASA Space Shuttle plant growth experiments -- to activate light-sensitive, tumor-treating drugs.

Experiments indicate that when special tumor-fighting drugs are illuminated with LEDs, the tumors can be more effectively destroyed than with conventional surgery. The light source, consisting of 144 of the tiny diodes, is compact -- the size of a small human finger about one-half-inch in diameter -- and mechanically more reliable than lasers and other light sources used to treat cancer. The entire light source and cooling system is only the size of a medium suitcase.

Dr. Harry Whelan of the Medical College of Milwaukee, WI, has obtained Food and Drug Administration approval to use the LED probe for the treatment of children's brain tumors on a trial basis. Dr. Whelan's therapy involves injecting the patient's bloodstream with a drug called Photofrin II. Photofrin II attaches to the unwanted tissues and permeates into them, leaving the surrounding tissues unaffected. Dr. Whelan then places the new solid-state LED probe near the affected tissue to illuminate the tumor and activate the Photofrin II drug. Once activated by the light, the drug destroys the tumor's cells, leaving the normal brain tissues virtually untouched.

"This new probe," said Dr. Whelan, "illuminates through all nearby tissues. We've used lasers too, but they are often unreliable and limited in color spectrum. Lasers also are very expensive and lose power in their fiberoptic cables."

-more-

The LED probe can be used for hours at a time and remains cool to the touch. The entire LED unit can be purchased for a fraction of the cost of a laser.

The feasibility of using LEDs in cancer treatment was demonstrated through a NASA Small Business Innovation Research contract managed by the Technology Transfer Office at the Marshall Space Flight Center, Huntsville, AL. The small business, Quantum Devices, Inc., of Banreveld, WI, developed the LEDs as a light source for a chamber used by NASA to conduct plant research in space. These LEDs now form the tip of a new nine-inch neural probe.

"We're very happy to be a part of this innovative procedure," said Rose Allen, manager of the Space Product Development Office at Marshall. "It is exciting to see how NASA's commercial space research results in benefits on Earth. Who would have thought that experiments searching for ways to improve agricultural products would lead to a medical procedure that could save children's lives?" said Allen.

"The LED technology developed by NASA offers new hope to children with cancer," Dr. Whelan said. "Every one of our cases will be a critical case with no hopeful alternatives. We think this new probe will help give children with tumors a chance to live healthy, happy lives."

After Whelan concludes the FDA clinical trials, he anticipates full approval of what soon could be the operating technique of the future. Further research combining LEDs and new promising drugs is showing the possibilities of deeper tumor penetration with the probe, faster reaction times and shortened patient sensitivities to sunlight.

LED's low-energy technology flew on the second United States Microgravity Laboratory Spacelab mission in October 1995, as part of the Astroculture Plant Growth Facility. That experiment was led by Dr. Raymond J. Bula of the Wisconsin Center for Space Automation and Robotics in Madison, WI, a NASA Commercial Space Center. Commercial Space Centers, supported by NASA, pursue opportunities for continued growth of U.S. industry through the use of space.

"NASA has played a number of important roles," Dr. Whelan said. "NASA has funded the development of these LEDs for space research over the years," he added. "If it wasn't for the pre-existence of all that technology, it wouldn't have been possible for us to walk right in and use it to treat cancer."

-end-

News Release

National Aeronautics and
Space Administration
Washington, DC 20546
(202) 358-1600

For Release

Douglas Isbell
Headquarters, Washington, DC
(Phone: 202/358-1753)

November 6, 1997

RELEASE: 97-260

SCIENCE TEAM AND INSTRUMENTS SELECTED FOR MARS SURVEYOR 2001 MISSIONS

Two robotic spacecraft scheduled for launch in mid-2001 to orbit and land on Mars will carry a descent camera, a multispectral imager, and a robotic rover capable of traversing tens of miles across the red planet's rocky highlands.

The Mars Surveyor 2001 missions will follow two other robotic Mars missions to be launched in late 1998 and early 1999. All are part of NASA's long-term, systematic exploration of Mars in which two missions are launched to the planet approximately every 26 months.

"The Mars 2001 missions will be a major step forward in advancing our understanding of Mars and preparing to return samples," said Dr. Carl Pilcher, acting director for NASA's Solar System Exploration program. "When we combine the information from the 2001 missions with information from Mars Pathfinder, Mars Global Surveyor, and the missions we will launch to Mars in 1998 and 1999, we will have an excellent understanding of the planet as a whole, and we'll be well on the way toward investigating the most fascinating and scientifically intriguing surface sites in detail."

NASA's Office of Space Science has selected the following investigations for the Mars 2001 Orbiter, due for launch in March of that year, and the Mars 2001 Lander/Rover, due for launch in April:

• The Mars 2001 Thermal Emission Imaging System (THEMIS) will map the mineralogy and morphology of the Martian surface using a high resolution camera and a thermal infrared imaging spectrometer. Dr. Phil Christensen from Arizona State University in Tempe is the principal investigator for THEMIS.

-more-

• The Mars 2001 Lander will carry a small, advanced technology rover capable of traveling several tens of miles across the Martian highlands. The rover will be slightly larger than the Pathfinder Sojourner rover and will be designed to go farther (100 km vs. 100 m for Sojourner) and to last longer (1 year vs. 7 days for Sojourner). The rover will carry a payload called Athena, which is an integrated suite of instruments which will conduct in-situ scientific analyses of surface materials. It also will be able to collect and analyze core samples for later return to Earth by a future robotic mission. Dr. Steven Squyres from Cornell University, Ithaca, NY, is the principal investigator for Athena.

• The 2001 Lander also will carry an imager to take pictures of the surrounding terrain during the lander's rocket-assisted descent to the surface. The descent imaging camera will provide images of the landing site for geologic analyses, and will aid planning for initial operations and traverses by the Athena rover. Dr. Michael Malin of Malin Space Science Systems Inc. in San Diego, CA, is the team leader for the Descent Imager science team and Dr. Ken Herkenhoff of NASA's Jet Propulsion Laboratory (JPL), Pasadena, CA is a team member.

These investigations were selected from of a total of 39 proposals submitted to NASA in August 1997 in response to Anouncement of Opportunity (AO) -97-OSS-04, "Mars Surveyor Program 2001 Orbiter, Lander, Rover Missions: Science Investigations and Characterization of Environments," issued in June 1997.

The 2001 Orbiter will be the first to use the atmosphere of Mars to slow down and directly capture a spacecraft into orbit in one step, using a technique called aerocapture.

The Orbiter also will carry the Gamma Ray Spectrometer (GRS), the last of the remaining Mars Observer science investigations. The GRS will achieve global mapping of the elemental composition of the surface and the abundance of hydrogen in the shallow subsurface.

The AO also solicited soil, dust, and radiation investigations for the Mars 2001 mission. NASA's Office of Life and Microgravity Sciences and Applications will announce its decisions for these investigations at a later date.

An integrated team consisting of the Jet Propulsion Laboratory and Lockheed Martin Astronautics, Denver, CO, will develop the missions, led by JPL.

Both of the 2001 missions are part of an ongoing NASA series of robotic Mars exploration spacecraft that began with the launches of the Mars Global Surveyor orbiter and the Mars Pathfinder lander in November and December 1996, respectively.

- end -

Video Advisory

National Aeronautics and
Space Administration
Washington, DC 20546
(202) 358-1600

For Release
Nov. 7, 1997

Renee Juhans
Headquarters, Washington, DC
(Phone: 202/358-1712)

VIDEO ADVISORY: V97-112

AGATE: START YOUR ENGINE, GO!; SOHO: HEAVENLY SPARKLE!

Today's video package features animation on how NASA and the U.S. light plane industry are working together to make airplanes as easy to operate as cars and no more expensive than a luxury sedan. Also on NTV are the latest images of a powerful solar flare observed on Nov. 4, by the Extreme Ultraviolet Imaging Telescope (EIT) on board the Solar and Heliospheric Observatory spacecraft (SOHO).

ITEM 1: AGATE
The Advanced General Aviation Transport Experiment (AGATE) will make flying a personal aircraft as easy as driving a car.
For more information contact Dwayne Brown at (202) 358-1726 or Keith Henry at (757) 864-6120.

ITEM 2: LATEST SOLAR FLARES
ITEM 2a: MORE SOLAR FLARES
For more information contact Don Savage at (202) 358-1727 or Wade Sisler at (301) 286-6256.

ITEM 3: REPLAY - SHEDDING A NEW LIGHT ON CANCER
ITEM 3a: REPLAY - INTERVIEW - DR. HARRY WHELAN, NEUROLOGIST MILWAUKEE CHILDREN'S HOSPITAL
ITEM 3b: REPLAY - INTERVIEW - DR. KENNETH REICHART, NEUROSURGEON MILWAUKEE CHILDREN'S HOSPITAL
ITEM 3c: REPLAY - INTERVIEW - ROSE ALLEN, NASA SPACE PRODUCTS MANAGER
ITEM 3d: REPLAY - INTERVIEW - RON IGNATIUS, PRESIDENT, QUANTUM DEVICES
ITEM 4: REPLAY - "FRAME DRAGGING"
ITEM 4a: REPLAY - DISTORTING SPACE & TIME
ITEM 4b: REPLAY - BLACK HOLES
ITEM 4c: REPLAY - NASA'S ROSSI X-RAY TIMING EXPLORER (RXTE) SPACECRAFT
ITEM 4d: REPLAY - NEUTRON STARS
ITEM 5: REPLAY - ANIMATION OF THE TROPICAL RAINFALL MEASURING MISSION (TRMM)
ITEM 5a: REPLAY - ANIMATION OF INSTRUMENTS ON TRMM
ITEM 5b: REPLAY - SAMPLE DATA VISUALIZATIONS FOR TRMM
ITEM 5c: REPLAY - HIGH HEAT TRANSFER
ITEM 5d: REPLAY - TRMM SPACECRAFT IN CLEANROOM
ITEM 5e: REPLAY - TRMM HAS ITS OWN UNIQUE SCIENCE DATA AND INFORMATION SYSTEM (TSDIS)
ITEM 5f: REPLAY - WEATHER B-ROLL
ITEM 5g: REPLAY - INTERVIEW - DR. CHRISTIAN KUMMEROW, DEPUTY PROJECT MANAGER FOR TRMM

Video news file today at noon, 3, 6, 9 p.m. and midnight EDT.

NASA Television is available on GE-2, transponder 9C at 85 degrees West longitude, with vertical polarization. Frequency is on 3880.0 megahertz, with audio on 6.8 megahertz.

News Release

National Aeronautics and
Space Administration
Washington, DC 20546
(202) 358-1600

For Release

Michael Braukus
Headquarters, Washington, DC
(Phone: 202/358-1979)

November 12, 1997

RELEASE: 97-261

NASA AWARDS MICROGRAVITY RESEARCH GRANTS

NASA has selected 26 researchers to receive grants totaling more than $6 million over five years for fundamental physics research in microgravity.

Sponsored by NASA's Office of Life and Microgravity Science and Applications, Washington, DC, the objective of the fundamental physics in microgravity research program is to test clearly posed hypotheses to increase the understanding of basic physics and the role of gravity in nature's processes. Increasing knowledge of fundamental physics will expand our understanding of space, time and matter and may provide the foundation for new technology advances.

Twenty of the grants are for ground-based research, while the remaining six are for flight definition projects. Eight of these grants are for continuation of work currently being funded by NASA; the remaining proposals represent new research efforts.

NASA received 86 proposals in response to this research announcement. These proposals were each peer reviewed by scientific and technical experts from academia and government. In addition, proposals selected for flight definition were reviewed in terms of engineering feasibility by a team from NASA's Jet Propulsion Laboratory, Pasadena, CA.

The list of the grant recipients is available by calling the NASA Headquarters Newsroom at 202/358-1600 or via the Internet at URL:

ftp://ftp.hq.nasa.gov/pub/pao/pressrel/1997/97-261a.txt

- end -

Flight Definition Grants

California

Dr. Guenter Ahlers
"Boundary Effects on Transport Properties and Dynamic Finite-Size Scaling Near the Superfluid-Transition Line of Helium IV"
University of California, Santa Barbara
Santa Barbara, CA

Dr. Melora Larson
"Experiments Along Coexistence Near Tricriticality (EXACT)"
Jet Propulsion Laboratory
Pasadena, CA

Dr. John Andrew Lipa
"Fundamental Physics Experiments With Superconducting Cavity - Stabilized Oscillators on Space Station"
Stanford University
Stanford, CA

Dr. Feng-Chuan Liu
"Critical Thermal Transport in a Cross-over Range from 3-dimensional to 2-dimensional Behavior"
Jet Propulsion Laboratory
Pasadena, CA

Colorado

Dr. Donald Sullivan
"Develop a Laser-Cooled-Cesium Clock for Scientific and Technical Applications in Space"
National Institute of Standards and Technology
Boulder, CO

Connecticut

Professor Kurt Gibble
"Investigation of Future Microgravity Atomic Clocks"
Yale University
New Haven, CT

Ground Grants

California

Dr. C. W. Francis Everitt
"Satellite Test of the Equivalence Principle"
Stanford University
Stanford, CA

Dr. John Andrew Lipa
"High Resolution Study of the Critical Region of Oxygen Using Magnetic Levitation"
Stanford University
Stanford, CA

Dr. John Andrew Lipa
"A Test of Supersymmetry Theory by Searching for Anomalous Short Range Forces"
Stanford University
Stanford, CA

Professor Richard E. Packard
"Superfluid Gyroscopes for Space"
University of California, Berkeley
Berkeley, CA

Mr. Pat R. Roach
"A Microgravity Helium Dilution Cooler"
NASA Ames Research Center
Moffett Field, CA

Professor Peter Taborek
"Helium III - Helium IV Mixtures and Droplets Stabilized in Cesiated Containers"
University of California, Irvine
Irvine, CA

Colorado

Dr. John L. Hall
"Fundamental Physics Using Frequency-Stabilized Lasers as Optical 'Atomic Clocks'"
University of Colorado, Boulder
Boulder, CO

Connecticut
Professor Juha Javanainen
"Bose-Einstein Condensate and Atom Laser: Coherence and Optical Properties"
University of Connecticut
Storrs, CT

Dr. Mark A. Kasevich
"Atom Interferometry in a Microgravity Environment"
Yale University
New Haven, CT

Delaware
Professor Siu-Tat Chui
"Droplets of Helium III - Helium IV Mixtures"
University of Delaware
Newark, DE

Massachusetts
Professor Wolfgang Ketterle
"Towards Precision Experiments with Bose-Einstein Condensates"
Massachusetts Institute of Technology
Cambridge, MA

Dr. Ronald L. Walsworth
"Ground-Based Investigations with the Cryogenic Hydrogen Maser and the Double-Bulb Rubidium Maser"
Smithsonian Institution
Cambridge, MA

Maryland
Professor Ho Jung Paik
"Search for Spin-Mass Interaction With a Superconducting Differential Angular Accelerometer"
University of Maryland
College Park, MD

Dr. William D. Phillips
"Evaporative Cooling and Bose Condensates in Microgravity: Picokelvin Atoms in Space"
National Institute of Standards and Technology
Gaithersburg, MD

New York
Professor David M. Lee
"Studies of Atomic Free Radicals Stored in a Cryogenic Environment"
Cornell University
Ithaca, NY

Professor Jeevak M. Parpia
"The Effect of Thermal History, Temperature Gradients, and Gravity on Capillary Condensation of Phase Separated Liquid Helium III - Helium IV Mixtures in Aerogel"
Cornell University
Ithaca, NY

Ohio
Dr. Tin-Lun (Jason) Ho
"Gravitational Effects in Bose-Einstein Condensate of Atomic Gases"
Ohio State University
Columbus, OH

Dr. Donald T. Jacobs
"Turbidity and Universality Around a Liquid-Liquid Critical Point"
The College of Wooster
Wooster, OH

Tennessee
Dr. Alvin J. Sanders
"Research and Analysis in Support of Project SEE (Satellite Energy Exchange): Test of the Equivalence Principle and Measurement of Gravitational Interaction Parameters in an Ultra-Precise Microgravity Environment"
University of Tennessee
Knoxville, TN

Texas
Professor Randall G. Hulet
"A Quantum Degenerate Fermi Gas of 6Li Atoms" Rice University, Houston, TX

News Release

National Aeronautics and
Space Administration
Washington, DC 20546
(202) 358-1600

For Release

Douglas Isbell
Headquarters, Washington, DC
(Phone: 202/358-1753)

November 10, 1997

Diane Ainsworth
Jet Propulsion Laboratory, Pasadena, CA
(Phone: 818/354-5011)

RELEASE: 97-262

SURVEYOR RESUMES AEROBRAKING, HEADING TOWARD NEW MAPPING ORBIT

NASA's Mars Global Surveyor spacecraft has successfully resumed aerobraking through the upper atmosphere of Mars, heading toward a new science mapping orbit that is the mirror image of its original target orbit, project officials announced today.

Aerobraking resumed Nov. 7 with a brief propulsive maneuver that changed Global Surveyor's flight path slightly. A second maneuver was performed successfully on Nov. 9, with a third maneuver planned for Nov. 12. These small adjustments at the farthest part of the spacecraft's orbit around Mars -- known as the apoapsis -- begin the process of lowering Global Surveyor's orbit into the Martian atmosphere more gradually than originally planned.

The more gradual aerobraking strategy will lead to a new mapping orbit that preserves all of the original scientific objectives of the mission. Selected by the mission's science team, the new orbit is essentially just the reverse of the original orbit: data will be taken from the south to the north along the spacecraft's orbital track, rather than north to south, and mapping will begin one year later than originally planned.

In this new mapping orbit, beginning one-half Mars year (equivalent to one Earth year) later than planned, Mars will be at a point in its orbit that is directly opposite where it would have been in the original mission. From the spacecraft's point of view, the side of Mars that would have been dark will be sunlit and vice versa.

-more-

"From the perspective of the science instruments, the orbit will look just like the original orbit, except that instead of taking data from north to south on the sunny side of Mars, Global Surveyor will be making its observations in a south to north direction in the sunlight," said Glenn E. Cunningham, Mars Global Surveyor project manager at NASA's Jet Propulsion Laboratory (JPL), Pasadena, CA. "The new mapping orbit will take the spacecraft down over the Martian equator at 2 a.m. local Mars time during each orbit, rather than the originally planned orbit that would have crossed the Martian equator at 2 p.m."

The new mapping orbit will take an additional year to achieve, due to both the more gradual pace of aerobraking and a six-month hiatus in the spring of 1998, while Mars moves into the correct alignment with the Sun for global mapping. Rather than reaching its final mapping orbit in mid-January 1998, and beginning the science mission in mid-March 1998, Mars Global Surveyor will achieve its final orbital position in mid-January 1999, and mapping will begin in mid-March 1999.

"Essentially, we will begin mapping the surface of Mars in mid-March 1999, during summer in the northern hemisphere," Cunningham said. "Originally we had planned to begin mapping on March 15, 1998, during summer in the southern hemisphere."

During next year's hiatus, Mars Global Surveyor will remain in a fixed, elliptical orbit in which it will pass much closer to the surface of Mars during each periapsis -- or closest part of its orbit around Mars -- than it will in the final mapping orbit. These close-range passes are essentially an opportunity for bonus science and will provide superb opportunities for data acquisition. The spacecraft's full suite of instruments, including the laser altimeter, will be turned on during this time to study the planet up close.

"We expect to gain some spectacular new data during this time," Cunningham said. "The spacecraft's orbit will still be elliptical during this period, with a duration of between eight to 12 hours, but at periapsis, the surface resolution will be much greater, and the lighting angles will be excellent."

Mars Global Surveyor's first two aerobraking maneuvers have gone well, giving the operations team confidence that the spacecraft's unlatched panel will be able to withstand an increased amount of pressure as it begins to dip lower into the Martian atmosphere. The new pressure level (an average of 0.2 newtons per square meter) is about one-third the level of pressure originally planned for aerobraking. Aerobraking is a technique that allows a spacecraft to lower its orbit without relying on propellant, by using the drag produced by a planet's atmosphere. The technique was first demonstrated in the summer of 1993 during the final months of NASA's Magellan mission to Venus.

Although these initial maneuvers have not changed Global Surveyor's orbital period significantly, they will soon begin to reduce the time it takes the spacecraft to complete one revolution around Mars.

"The spacecraft's unlatched solar panel performed as expected during the two drag passes we've conducted so far," Cunningham said. "Although we observed some slight movement during the passes, the panel returned to its initial position and its stiffness did not change. That performance gives us confidence that the mission can proceed without further delay."

A third, five-second burn with spacecraft's small thrusters to be performed at 2:30 a.m. EST on Nov. 12 will lower the spacecraft's periapsis by an additional 2.5 miles (four kilometers). With completion of that maneuver, Global Surveyor will begin the main phase of aerobraking well inside the upper atmosphere of Mars. During this two-month main phase, the spacecraft will be circling Mars every 34.5 hours to start at a periapsis altitude of about 77 miles (125 kilometers), with the apoapsis starting at 27,500 miles (44,400 kilometers) and decreasing with each pass. The final goal is a 248-mile (400 kilometer) circular mapping orbit.

If additional problems arise with the aerobraking process, the new mission plan will offer the Surveyor team other opportunities to reach an elliptical orbit that will satisfy many of the mission's science objectives. These so-called "off-ramps" from the aerobraking process, will be detailed in a new mission plan to be reviewed by NASA officials in February 1998.

During a press briefing today at JPL, scientists also showed stunning new images of layered rock and sediment in the canyon walls of Valles Marineris on Mars. Other images of an ancient valley hint at the presence of active sand dunes and dried-up ponds. The new images are available on the Internet at URL:

http://www.msss.com/

or

http://barsoom.msss.com/mars/global_surveyor/camera/images/

Additional information about the Mars Global Surveyor mission is available on the World Wide Web by accessing JPL's Mars news site at URL:

http://www.jpl.nasa.gov/marsnews/

or the Global Surveyor project home page at URL:

http://mars.jpl.nasa.gov/

Mars Global Surveyor is part of a sustained program of Mars exploration known as the Mars Surveyor Program. The mission is managed by JPL for NASA's Office of Space Science, Washington, DC. JPL's industrial partner is Lockheed Martin Astronautics, Denver, which developed and operates the spacecraft. JPL is a division of the California Institute of Technology, Pasadena, CA.

-end-

News Release

National Aeronautics and
Space Administration
Washington, DC 20546
(202) 358-1600

Michael Braukus
Headquarters, Washington, DC
(Phone: 202/358-1779)

For Release
November 13, 1997

RELEASE 97-264

TRAFTON ANNOUNCES HIS DEPARTURE FROM NASA

Wilbur C. Trafton, Associate Administrator for the Office of Space Flight at NASA Headquarters, has announced his intention to leave NASA, effective next month. NASA is proceeding with the search for a successor.

Trafton has been the space agency's top official for human space flight since March 1996. During his tenure, the Space Shuttle has safely and successfully flown 13 missions, and the International Space Station program has moved from planning to the production of almost a quarter-of-a-million pounds of flight hardware.

"I have been enormously privileged to lead this terrific team of talented people who make up the wide range of programs represented by the Office of Space Flight," Trafton said. "I could not be prouder of my association with them, or of the work we have done together."

"Wil Trafton has met or exceeded all of the challenges I have placed before him," NASA Administrator Daniel S. Goldin said. "Through his superior leadership of the Human Exploration and Development of Space enterprise and its many complex programs, the agency is in a better position to meet its goals in space and to do so safely."

Trafton came to NASA as director of the Space Station program in January 1994. In that position he was responsible for overall planning, budgeting and management of the International Space Station, a joint project between the United States, Russia, the European Space Agency, Japan and Canada.

During Trafton's time in the top Space Station and Office of Space Flight positions, Russia joined the Station program as a full partner. The Space Station, the largest international scientific cooperative effort in history, now involves 16 nations, has produced 225,000 pounds of flight-ready hardware, and is less than one year from launch of the first components. During the same time, the Space Shuttle program has embarked on an extensive hardware upgrade project and instituted a single prime contractor.

Trafton said he would announce his future plans at a later date.

-end-

News Release

National Aeronautics and
Space Administration

Washington, DC 20546
(202) 358-1600

Douglas Isbell
Headquarters, Washington, DC
(Phone: 202/358-1753)

Lanee Cobb
Stennis Space Center, Stennis, MS
(Phone: 228/688-3341)

For Release
November 17, 1997

RELEASE: 97-268

FIRST PHASE OF EARTH SCIENCE DATA PURCHASE AWARDS SELECTED

Eleven offers have been selected for contract negotiations in the first phase of NASA's planned purchase of Earth science data and related information products that meet both commercial needs and the agency's scientific requirements.

"This is truly a new way of doing business for NASA," said William Townsend, Acting Associate Administrator for the NASA Office of Mission to Planet Earth, Washington, DC. "But it's just one step in a longer, multifaceted process of NASA working more aggressively with industry and other non-governmental organizations to advance scientific understanding of our Earth as a total environmental system."

The U.S. Congress approved the plan to initiate the data purchase activity in the fiscal 1997 NASA budget. It will be managed by the NASA Commercial Remote Sensing Program at Stennis Space Center, Stennis, MS, the Agency's lead center for fostering commercial applications of NASA Earth science data and related technology.

A Request For Offers was made by NASA in May 1997 to provide unique Earth science data and related information products for purchase. The purchased information will be used by research teams within NASA's Earth science enterprise, which manages the agency's portion of an internationally coordinated research effort to study the Earth's land, oceans, atmosphere, ice and life as a global environmental system.

By purchasing data upon delivery from private industry instead of developing, building and launching new satellites, NASA may be able to conduct and expand its scientific investigations at a much lower cost, while encouraging the growth of this economic sector, Townsend said.

-more-

The first phase of this effort will cover a maximum six-month period to be spent analyzing and validating sample data sets. Those proposals selected to continue to Phase II will receive a letter describing the price, quantity of data and its required characteristics, based on terms and conditions commonly found in the commercial marketplace.

Awards were based on several criteria, including "best science value" to the government, and the degree to which the offered data met the business and performance characteristics of the solicitation, including scientific utility, data rights and the proposed price.

The successful offerors are:

Earth Satellite Corporation, Rockville, MD, will provide a medium-resolution common global geographic reference database using Landsat Multispectral and Thematic Mapper images.

Jackson and Tull/Woods Hole Oceanographic Institute, Seabrook, MD, will provide high-volume, on-site ocean data using demonstration ocean buoys with interactive telemetry links.

User Systems/Space Imaging-EOSAT, Gambrills, MD, will process and provide distribution capability for 18 terabytes of Shuttle Imaging Radar data in support of land surface classification research.

Earthwatch, Longmont, CO, will provide high-resolution imagery from the Earlybird commercial remote-sensing satellite, over the Upper San Padre Basin, CA, and Stennis Space Center. Phase II imagery acquisitions will be determined by the Earth science community.

The University of Wisconsin, Madison, WI, will provide a complete dataset of upper tropospheric water vapor and cloudiness data using the Visible/Infrared Spin Scan Radiometer Atmospheric Sounder aboard U.S. GOES weather satellites.

Space Imaging-EOSAT, Thornton, CO, will provide three-foot (one-meter) resolution panchromatic and 13-foot (four-meter) resolution multispectral imagery. In Phase I it will be simulated; Phase II data will be from the IKONOS satellite constellation that will be launched by the company later this year.

Final Analysis, Lanham, MD, will provide measurements of atmospheric aerosols and trace gases from the deployment of a planned 12-satellite constellation.

Positive Systems, Whitefish, MT, will provide three-foot (one-meter) resolution multispectral imagery over the Sevilleta National Wildlife Refuge, NM.

TRW Civil & International Systems Division, Redondo Beach, CA, will provide airborne hyperspectral imagery (384 channels) based over the highly characterized region around Jasper Ridge, CA.

Astrovision, Inc., Stennis Space Center, MS, will provide 24-hour imagery from geostationary orbit to provide real-time documentation of public and environmental hazards such as tornadoes, hurricanes, lightning, fires, volcanoes, meteors and floods.

Resource 21, Englewood, CO, will provide data for extracting land resources management information from multispectral imagery that could provide continuity with Landsat-7 data.

Further information about these products and awards is available on the Internet at URL:

http://procurement.nasa.gov/EPS/SSC/award.html

-end-

News Release

National Aeronautics and
Space Administration

Washington, DC 20546
(202) 358-1600

For Release

Debra Rahn
Headquarters, Washington, DC
(Phone: 202/358-1639)

November 17, 1997

Yuri Shatalin
Russian Space Agency, Moscow, Russia
(Phone: 095/971-8139)

Eileen M. Hawley/James Hartsfield
Johnson Space Center, Houston, TX
(Phone: 281/483-5111)

RELEASE: 97-269

U.S., RUSSIA NAME INTERNATIONAL SPACE STATION CREWS

The first four crews to live and work onboard the International Space Station (ISS) were named today by both the U.S. and Russian space agencies.

"This is an historic step in the evolution of the International Space Station," said Randy Brinkley, manager of the International Space Station. "These assignments are a clear indication of the maturity of the space station and the exciting reality that the ISS will soon be operational."

The first increment crew consists of American astronaut William M. Shepherd (Capt., USN), the expedition commander; Yuri Gidzenko (Col., Russian Air Force), the Soyuz vehicle commander; and cosmonaut Sergei Krikalev, the flight engineer. All three have previous space flight experience. The crew is training for an early 1999 launch on a Soyuz vehicle for a planned five-month mission on the ISS.

Shepherd, Gidzenko and Krikalev will be relieved in the summer of 1999, when the second incremental crew is scheduled to arrive aboard Space Shuttle Atlantis. That crew will be commanded by Russian Cosmonaut Yuri Usachev. He will be joined by American astronauts James S. Voss (Col., USA) and Susan J. Helms (Lt. Col., USAF). All three also have flown in space before.

-more-

The third crew to inhabit the International Space Station will begin a two-month mission launching aboard a Soyuz spacecraft in late 1999. That crew will be commanded by American astronaut Kenneth D. Bowersox (Commander, USN). Russian cosmonauts Vladimir Dezhurov, (Lt. Col., Russian Air Force) the Soyuz vehicle commander, and Mikhail Turin, the flight engineer, will join Bowersox to complete the crew. Bowersox and Dezhurov have prior spaceflight experience while Turin will be making his first flight into space. To provide maximum flexibility in schedule and training, this crew also will train as backup for the first resident space station crew of Shepherd, Gidzenko and Krikalev.

The fourth resident crew will be commanded by Russian cosmonaut Yuri Onufrienko (Col., Russian Air Force). Onufrienko will be joined on this four-month mission by astronauts Carl E. Walz (Lt. Col., USAF) and Daniel Bursch (Cmdr., USN). All three have previously flown in space. They currently are scheduled to arrive at the station onboard Shuttle Discovery early in the year 2000 and will return to Earth on a Soyuz vehicle. They will train as the back-up crew for Usachev, Voss and Helms, the second station resident crew.

The continuing cooperation in joint U.S.-Russian space operations is reflected in the selection of these first ISS crews. Krikalev and Dezhurov, veterans of the Mir space station, also flew on the U.S. Space Shuttle, while Gidzenko, Usachev and Onufrienko flew with U.S. astronauts aboard the Mir on both long-duration and Shuttle-Mir docking missions.

These crews will continue the on-orbit construction of the space station through a series of scheduled space walks throughout the course of the first four missions. They will perform flight tests of the station hardware, conduct internal and external maintenance tasks, and develop the capability of the station to support the addition of science experiments.

For complete biographical information on these crews and other astronauts, see the NASA Internet astronaut biography home page at the following URL:

http://www.jsc.nasa.gov/Bios/

For information on the International Space Station, visit the space station home page at URL:

http://station.nasa.gov

-end-

NewsRelease

National Aeronautics and
Space Administration

Washington, D.C. 20546
(202) 358-1600

For Release

Beth Schmid
Headquarters, Washington, DC
(Phone: 202/358-1760)

November 17, 1997

RELEASE: 97-270

U.S./UKRAINIAN STUDENTS COLLABORATE ON SHUTTLE EXPERIMENT

High school students from the United States and Ukraine and astronauts aboard Space Shuttle Columbia will perform plant science experiments during NASA's STS-87 mission. While the students construct simulated flight hardware and study plant growth, pollination and fertilization of the *Brassica rapa* plant in their classrooms, the same plant investigation will take place in the microgravity environment aboard the Shuttle.

The educational activities, a significant component of the Collaborative Ukrainian Experiment (CUE) payload, are known as Teachers and Students Investigating Plants in Space, or CUE-TSIPS.

Until recently, plants grown in space from seeds failed to produce new seeds. Astronaut Michael Foale, aboard the Russian space station Mir, used a new technique with a dead bee glued to the end of a toothpick to pollinate plants and successfully produced the first seed-to-seed experiment in microgravity. That same technique will be replicated on the Shuttle during the STS-87 mission and in schools across the United States and Ukraine.

On Dec. 1, as part of the STS-87 mission events, Ukrainian students and American students will participate in 30-minute downlink sessions from the Shuttle, at 5:36 a.m. EST and at 9:46 a.m. EST, respectively. Crew members will answer student questions and explain how microgravity affects virtually every aspect of plant growth.

On Dec. 8, after the STS-87 mission has ended, NASA Administrator Daniel S. Goldin will visit students at the Grissom Middle School in Tinley Park, IL, to participate in a post-mission discussion and bring to a conclusion the nationwide CUE-TSIPS project.

The CUE mission carries the first cooperative scientific payload between NASA and the National Space Agency of Ukraine. Colonel Leonid Kadenyuk, the primary payload specialist and first Ukrainian to fly aboard a U.S. Space Shuttle, will perform the experiment procedures that will be simulated in classrooms.

-more-

Additional information about the CUE-TSIPS project can be found on the Internet at the following URL:

http://fastplants.cals.wisc.edu/cue/cue.html

Comparison of Shuttle and classroom results will continue after the mission and also can be found at the URL listed above.

CUE-TSIPS is sponsored by NASA Headquarter's Life Sciences Division and Education Division.

-end-

Video Advisory

National Aeronautics and
Space Administration

Washington, DC 20546
(202) 358-1600

Debbie Rivera
Headquarters, Washington, DC
(Phone: 202/358-1743)

For Release
Nov. 18, 1997

VIDEO ADVISORY: V97-117

AND YOU THOUGHT THE 20TH CENTURY WAS ALL WET

Today's video package shows how precipitation has increased over Earth's land surfaces since 1900, and includes effects of El Nino. In addition, NTV will have footage of tests that prove laser propulsion could be a way to dramatically reduce the cost of getting into space, and b-roll of the first four crews for the International Space Station. Footage to support coverage of STS- 87 continues.

ITEM 1: IT'S RAINING, IT'S POURING
Precipitation patterns are visualized to show increases from 1900 to 1988.
ITEM 1a: GLOBAL PRECIPITATION
Graphic includes effects of cyclical variations such as El Nino.
ITEM 1b: PRECIPIATION TRENDS
ITEM 1c: TRIMM ANIMATION
The Tropical Rainfall Measuring Mission will study El Nino-related rainfall changes.
ITEM 1d: HURRICANE FLYOVER
Visualization shows flyover with a beam.
ITEM 1e: RAINFALL
For more information contact Dave Steitz at (202) 358-1730 or Wade Sisler at (301) 286-6256.
ITEM 2: LASER LIFTOFF
Footage of the tests at White Sands Missile Range, NM.
ITEM 2a: INTERVIEW - LEIK MYRABO, RONSSELEAR POLYTECHNIC INSTITUTE
ITEM 2b: INTERVIEW - FRANKLIN MEAD, AIR FORCE RESEARCH LAB
ITEM 2c: INTERVIEW - JOHN COLE, NASA MANAGER
For more information contact Jim Cast at (202) 358-1779 or June Malone at (205) 544-7061
ITEM 3: REPLAY - FIRST CREWS FOR INTERNATIONAL SPACE STATION
For more information contact Debra Rahn at (202)358-1638 or Eileen Hawley at (287) 483-8456.
ITEM 4: REPLAY - GALAPAGOS STILL IMAGE AND RELATED PACKAGE
For more information contact Doug Isbell at (202) 358-1753 or Wade Sisler at (301) 286-6256.
ITEM 5: STS-87 B-ROLL AND INTERVIEWS
New footage includes improving computers and metals, the MEPHISTO experiment, how helium can help and the mini-laboratory called the Middeck Glovebox.
For more information contact Steve Roy at (205) 544-6535.

Video news file today at noon, 3, 6, 9 p.m. and midnight EST.

NASA Television is available on GE-2, transponder 9C at 85 degrees West longitude, with vertical polarization. Frequency is on 3880.0 megahertz, with audio on 6.8 megahertz.

-end-

News Release

National Aeronautics and
Space Administration
Washington, DC 20546
(202) 358-1600

For Release

David E. Steitz
Headquarters, Washington, DC
(Phone: 202/358-1730)

November 18, 1997

Lynn Chandler
Goddard Space Flight Center, Greenbelt, MD
(Phone: 301/286-9016)

RELEASE: 97-271

GLOBAL LAND PRECIPITATION INCREASES IN 20TH CENTURY

Global land precipitation has increased during the 20th century, especially at the mid and high latitudes, according to a paper published in the November 1997 issue of the Journal of Climate.

The paper, written by scientists Drs. Inez Fung, Anthony Del Genio, and Aiguo Dai, is based on a recalibrated compilation and analysis of data from 1900-1988 and confirms previous speculation that land precipitation is increasing. The new research shows a global land trend of a 2.4 mm per decade increase in annual precipitation amounts. Multiplied by almost nine decades, this means that there is about 22 mm more rain falling now each year than there was at the turn of the century -- rainfall as a global mean has risen by slightly more than two percent.

"Though much speculation remains as to the cause of this increase, further long-term study is needed to help ascertain the reasons for this change. The research does show, however, that both the spatial pattern and rate of precipitation increase are reminiscent of global climate model predictions of the atmosphere's response to an increase in greenhouse gas concentrations," said Dr. Anthony Del Genio, research scientist at NASA's Goddard Institute for Space Studies (GISS), New York City.

NASA scientists learned of this rise in precipitation from a new data set constructed at GISS. Scientists analyzed the data at face value but, in the process, used mathematical techniques to detect patterns of historical errors. Researchers developed new ways to objectively determine variations and remove ones that are not accurate. Finally, they performed a statistical test to determine the numerical confidence and came up with the revised database, which they believe shows the long term changes more precisely than previous analyses of the data.

-more-

"This database represents a potentially valuable resource for understanding the nature of land precipitation variations and their role in climate processes," said Dai, a researcher at GISS, a branch of NASA's Goddard Space Flight Center, Greenbelt, MD.

For example, the research analysis confirms the global patterns of the presence of an El Nino and also depicts the well-known Sahelian drought of the past few decades that has been a major influence over parts of Africa.

Through the construction of this historical database, researchers confirmed the occurrences of 24 droughts and five floods world-wide in the 20th century, though most took place in the tropics rather than middle latitudes.

Scientists have long held that precipitation is one of the most important aspects in Earth's climate system because of its impact on the global biosphere. In addition, precipitation limits the amount of water vapor in the atmosphere. Water vapor is the most important greenhouse gas and thus helps to determine Earth's surface temperature. The amount of water vapor in the atmosphere determines when and where clouds form.

"The latent heat released when water precipitates out of the atmosphere is the primary way in which the tropical ocean 'communicates' with the atmosphere and drives the tropical atmospheric circulation," said Del Genio.

Tracking precipitation and its relationship to global climate, however, has been difficult because the data have not been recorded into coordinated databases until recently. In addition, precipitation measurements vary widely across small geographic areas making it difficult to measure accurately. Through further study, NASA and researchers at GISS hope to create more accurate models from which conclusions about global rainfall can be drawn.

NASA also is due to launch this month the Tropical Rainfall Measuring Mission (TRMM), the first mission dedicated to measuring tropical and subtropical rainfall through microwave and visible infrared sensors. The TRMM mission includes the first spaceborne rain radar. Tropical rainfall comprises more than two-thirds of global rainfall. Data from the TRMM mission should greatly enhance researchers' understanding and prediction abilities of global climate change.

The ongoing research at GISS is funded through NASA's Mission to Planet Earth Enterprise, a long-term coordinated research effort to study the total Earth system and the effects of natural and human-induced changes on the global environment.

-end-

More information is available on the Internet at the following URL:

http://www.giss.nasa.gov/data/adai/

News Release

National Aeronautics and
Space Administration

Washington, DC 20546
(202) 358-1600

For Release

Michael Braukus
Headquarters, Washington, DC
(Phone: 202/358-1979)

November 19, 1997

RELEASE: 97-272

NASA ANNOUNCES RESEARCH GRANTS IN MICROGRAVITY FLUID PHYSICS

NASA has selected for funding 39 two-to-four year research proposals for microgravity fluid physics research worth approximately $13 million.

Supported by NASA's Office of Life and Microgravity Science and Applications, Washington, DC, this research offers investigators the opportunity to take advantage of a low-gravity environment to improve understanding of fundamental physical and chemical processes associated with fluid physics phenomena, which are often masked by normal gravity. Increasing knowledge of fundamental fluid physics will provide the foundation for new technology advances and permit humans to live and work in space.

Fluid physicists seek to better understand the physical principles governing fluids, including how fluids flow under the influence of energy, such as heat or electricity; how particles and gas bubbles suspended in a fluid interact with and change the properties of the fluid; how fluids interact with solid boundaries; and how fluids change phase, either from fluid to solid or from one fluid phase to another.

The investigators will have NASA's microgravity research facilities, such as drop towers and aircraft for flying parabolic trajectories at their disposal as needed, with the flight definition investigations working toward experiments on a space-flight testbed, such as sounding rockets, the Space Shuttle or the International Space Station.

Thirty-three of the grants are for ground-based research, while the remaining six are flight definition efforts. Two of these grants are for continuation of work currently funded by NASA, but the remaining 37 proposals represent new research efforts. NASA reviewed 227 proposals in response to its research announcement.

The list of the grant recipients is available by calling the NASA Headquarters Newsroom at 202/358-1600 or via the Internet at URL:

ftp://ftp.hq.nasa.gov/pub/pao/pressrel/1997/97-272a.txt

- end -

News Release

National Aeronautics and
Space Administration
Washington, DC 20546
(202) 358-1600

For Release

Douglas Isbell
Headquarters, Washington, DC
(Phone: 202/358-1753)

November 19, 1997

Jim Sahli
Goddard Space Flight Center, Greenbelt, MD
(Phone: 301/286-0697)

RELEASE: 97-273

NASA AWARDS THE FIRST RAPID SPACECRAFT DELIVERY ORDER TO BALL AEROSPACE FOR THE DELIVERY OF QUIKSCAT SPACECRAFT

NASA has approved an immediate new start for the Quick Scatterometer (QuikSCAT) mission and has placed the first delivery order issued under the Indefinite Delivery/Indefinite Quantity (ID/IQ) contracts for rapid delivery of satellite core-systems to Ball Aerospace Systems Division, Boulder, CO. The ID/IQ procurement method provides NASA a faster, better, cheaper method for the purchase of satellite systems through a "catalog," allowing for shorter turnaround time from mission conception to launch.

The mission will fill in the ocean-wind vector data gap created by the loss of the NASA Scatterometer (NSCAT) on the Japanese Advanced Earth Observing Satellite (ADEOS) spacecraft. The NSCAT instrument ceased functioning when ADEOS failed on June 30, 1997. The follow-on scatterometer for monitoring ocean winds, called SeaWinds, is scheduled for launch on the Japanese ADEOS-II spacecraft in 2000. QuickSCAT is planned for launch in November 1998, reducing the data gap by about one-half.

"The challenge levied to us requires the satellite, instrument, ground system, and launch vehicle be developed, integrated, and launched in less than a year, something that has not been accomplished before," said Jim Graf, the QuikSCAT project manager at the Jet Propulsion Laboratory (JPL), Pasadena, CA.

"To accomplish this extremely short schedule, the satellite was chosen from a source with existing satellite hardware and Ball was chosen under NASA's newly instituted Indefinite Delivery/Indefinite Quantity contracts to be the spacecraft contactor," said Graf. "The instrument will be assembled by JPL from SeaWinds hardware spares."

-more-

QuikSCAT is planned for launch from Vandenberg Air Force Base, aboard a Titan II vehicle. Total cost for the QuikSCAT mission is approximately $93 million, including $39 million to Ball for the spacecraft and $22 million for the launch vehicle. JPL's cost to develop the instrument is $13 million. Congress approved NASA's use of fiscal year 1997 appropriated funds to undertake the mission.

QuikSCAT represents a unique collaboration between JPL and NASA's Goddard Space Flight Center, Greenbelt, MD. JPL's NSCAT/SeaWinds program office has been assigned the QuikSCAT management responsibility and will provide management, ground systems and a SeaWinds-type scatterometer instrument.

Goddard has been given responsibility to procure the satellite under the newly instituted ID/IQ, which enables a quick acquisition of a science bus to support NASA's space science, Earth science and technology needs. The award is the result of a competition among the eight contractors previously selected. This is the first of two spacecraft delivery orders expected to be placed in the first quarter of fiscal year 1998.

Ball will implement the QuikSCAT mission, which includes providing the spacecraft bus, integrating the JPL Scatterometer, and performing up to two years of observatory on-orbit operations.

QuikSCAT will use a rotating dish antenna with two microwave beams of the same design as SeaWinds. The antenna will radiate microwaves across 90 percent of the Earth's ice-free oceans every day. The instrument will collect wind-speed and wind direction data in a continuous 1118 mile-wide band, making approximately 400,000 measurements each day.

As a parallel effort, NASA intends to issue a solicitation for scientific data to determine whether any such capabilities exist in the commercial sector. If such data were available it could have the potential to achieve cost savings or the added benefit of a back-up source of data if a problem were to arise with the QuikSCAT mission.

Measuring ocean winds is important because winds are a driving force for oceanic motions, ranging from small-scale waves to large-scale systems of ocean currents. Winds directly affect the turbulent exchanges of heat, moisture and greenhouse gases between the atmosphere and the ocean. These air-sea exchanges, in turn, determine regional weather patterns and shape global climate. Ocean winds data collected before the loss of NSCAT showed great promise in improving scientists' ability to forecast the movement of tropical storm systems -- one reason why NASA wants to bring this capability back on-line as soon as possible.

QuikSCAT will be managed by JPL for NASA's Office of Mission to Planet Earth enterprise, a long-term coordinated research effort to study the Earth system and the effects of natural and human-induced changtes on the global environment.

-end-

News Release

National Aeronautics and
Space Administration

Washington, DC 20546
(202) 358-1600

For Release

Dwayne Brown
Headquarters, Washington, DC
(Phone: 202/358-1726)

November 20, 1997

Kirsten Williams
Dryden Flight Research Center, Edwards, CA
(Phone: 805/258-3449)

RELEASE: 97-274

MILESTONE ACHIEVED FOR ALL-ELECTRIC AIRPLANE TECHNOLOGY

Engineers at NASA's Dryden Flight Research Center, Edwards, CA, have completed tests on a device that paves the way for developing future all-electric airplanes which could be safer and more fuel efficient than today's aircraft.

Called the Electro-Hydrostatic Actuator, the device eliminates or minimizes airborne dependence on pneumatic, hydraulic and mechanical systems. It and related electrical systems also could lead to a five- to nine-percent fuel savings on an all-electric passenger plane, a 30- to 50-percent reduction in ground equipment, and a reduction in the vulnerability of military aircraft in combat situations.

The device, designed as part of a joint Air Force-Navy-NASA effort, was tested on the left aileron of NASA's F/A-18 Systems Research Aircraft without using the aircraft's central hydraulics.

"Throughout the flights the Electro-Hydrostatic Actuator performed as well as the standard actuator," said Robert Navarro, Dryden's principal investigator. "We completed the required 25 hours of flight time and the device continues to perform flawlessly."

Taking its signals from the aircraft's flight-control computers, the device uses its electronics to "fool" aircraft computers into thinking a standard actuator is on board. The device contains a small amount of hydraulic fluid, and it uses an electric motor to drive its pump, creating a force that moves the aileron.

For many years, NASA, the U.S. Air Force and the U.S. Navy have sought to eliminate sophisticated but heavy hydraulic systems in aircraft in favor of electrical "power-by-wire" systems for operating flight controls. Besides savings in costs and support, electrical systems promise diminished vulnerability in combat by eliminating hydraulic lines in the fuselage and wing box. The power-by-wire arrangement also will reduce complexity and improve reliability.

-more-

The device is part of the Electrically Powered Actuation Design program. The U.S. Air Force Research Laboratory, Wright-Patterson Air Force Base, OH, manages the overall program. Dryden provided ground testing for the actuator; installed and integrated it in the F/A-18; provided the necessary data acquisition systems and is responsible for flight safety.

The device is the second of three actuators being tested. It will continue to fly aboard the F/A-18 until early next year or until it is replaced by the Electro-Mechanical Actuator. The Air Force is sponsoring this mechanical actuator, which is powered by electronics.

-end-

News Release

National Aeronautics and
Space Administration
Washington, DC 20546
(202) 358-1600

For Release

Brian Dunbar
Headquarters, Washington, DC
(Phone: 202/358-0873)

November 20, 1997

Bill Bearden
General Services Administration, Washington, DC
(Phone: 202/501-1231)

RELEASE: 97- 275

NASA, GSA JOIN FORCES ON OUTSOURCING DESKTOP COMPUTING

NASA and the General Services Administration (GSA) have agreed to work together to procure desktop computing and networking services in a way that should save taxpayers millions of dollars in the coming years.

NASA Administrator Daniel S. Goldin and GSA Administrator Dave Barram announced the formation of the partnership after extensive discussions and working group sessions within the agencies. Under the terms of the partnership, the agencies will work closely together to implement GSA's Seat Management Program and NASA's Outsourcing Desktop Initiative (ODIN). GSA and NASA acquisition teams will share information, resources and key personnel, and NASA will include provisions in its ODIN contracts that will give GSA exclusive authority to issue and administer government-wide orders against ODIN contracts.

"We're going to pool our talents, and the benefits will be government-wide," said Lee Holcomb, NASA's Chief Information Officer.

"This approach recognizes the diversity of the government computing environment and will allow federal agencies a choice to select which contract best suits their individual needs," said Charles Self, GSA assistant commissioner for Information Technology Integration. "Outsourcing offers great potential to improve management of these distributed assets and enhances the government's ability to keep information technology current at competitive commercial prices."

- more -

Both agencies were separately arriving at different approaches to outsourcing computer equipment services, Holcomb said. "The partnership gives a richer set of options to federal agencies. And it's a way for us to be sure we're doing outsourcing right. We can learn from each other."

ODIN will require vendors to deliver specific end-to-end desktop, server, and local area communications services. These services will be offered under ODIN through a single fixed price per seat which includes computing, networking, maintenance, training, etc., and all associated costs. The ODIN service requirements are based on a comprehensive analysis across NASA of end-user and organizational needs and of commercial practices.

Under Seat Management, the government will acquire integrated services and the required components to include general purpose desktop computers, servers and associated peripherals; high performance computational systems and associated peripherals; local area and wide area network capabilities; commercial software; help-desk services; maintenence; design and installation; and training. GSA's objectives are to acquire quality desktop computing services as a utility in an integrated fashion through a single source and to achieve cost savings based on the private sector's ability to obtain and manage assets.

GSA's Office of Information Technology Integration (ITI) will proceed with its government-wide Seat Management contracts, and NASA will continue to work toward award of its ODIN contracts. Whereas GSA's Seat Management contracts will have a very broad scope to allow agencies the flexibility to construct "seats" to meet individual agency requirements, NASA's ODIN contracts will permit outsourcing for specific, pre-defined seat configurations.

After extensive discussion and the evaluation of numerous alternatives, Self and Holcomb concluded that proceeding with both solicitations is in the best interests of NASA, GSA and the government.

GSA has issued its Request for Proposals (RFP) for Seat, and NASA expects to issue an RFP for ODIN in the next several weeks, with the contract award and selection for both planned for next spring.

- end -

News Release

National Aeronautics and Space Administration
Office of Inspector General
Washington, DC 20546

For Release
November 21, 1997

Roberta L. Gross
Inspector General
(Phone: 202-358-1220)

Richard D. Triplett
Assistant Inspector General for Investigations
(Phone: 202-358-1233)

RELEASE: 98-008

Settlement Reached with NASA Contractor

On November 21, 1997, Transistor Devices, Inc. (TDI), of Cedar Knolls, New Jersey, entered into a Compromise and Settlement Agreement in U.S. District Court, Pensacola, Florida. Under the terms of the agreement, TDI agreed to pay the United States $929,000 and to deliver to NASA a full set of power unit drawings and the materials necessary to fabricate and replace 263 bias boards which the investigation disclosed were defective.

On January 11, 1996, a former employee of TDI's Military Power Systems Division, located in Fort Walton Beach, Florida, filed a lawsuit against TDI under the qui tam provisions of the False Claims Act. The lawsuit alleged that TDI supplied non-conforming power supply units to the United States under contracts with the Navy, Army, Air Force, and as a subcontractor to DNE Technologies, Inc., of Wallingford, Connecticut, on a NASA contract. Specifically, the lawsuit alleged that TDI employees produced power supply units which did not comply with Military Standard 2QOOA, a standard for soldering, even though each contract specified that all soldering conform to the standard. Post-delivery inspections of TDI's power units disclosed soldering defects that would have effected the power units' reliability. The NASA power units were designed to be used in numerous areas throughout the Kennedy Space Center, including at the Shuttle launch pads.

The investigation of this case was conducted by Special Agents from the NASA Office of Inspector General, the Air Force Office of Special Investigations, the Defense Criminal Investigative Service, the Naval Criminal Investigative Service and the Army Criminal Investigations Division.

News Release

National Aeronautics and
Space Administration
Washington, DC 20546
(202) 358-1600

Beth Schmid
Headquarters, Washington, DC
(Phone: 202/358-1600)

For Release
November 24, 1997

NOTE TO EDITORS: N97-83

SHUTTLE EDUCATION-LINKED EXPERIMENT TAKES OFF AROUND THE NATION

On Monday, Dec. 1, American and Ukrainian students will participate in a conversation with astronauts aboard the Space Shuttle Columbia, STS-87, discussing the progress of their joint plant-growing experiments as part of the Collaborative Ukrainian Experiment, Teachers and Students Investigating Plants in Space (CUE-TSIPS).

Shuttle Downlink to Students - Monday, Dec. 1, 9:46 a.m. EST

Students from the Cocoa High School and Lake Brantley High School, both in Florida, will visit the Kennedy Space Center, FL, and students from the Moises Molina and Adamson High Schools, Dallas, TX, will visit the Johnson Space Center, Houston, TX, on Dec. 1, where they will participate in the 9:46 a.m. EST downlink from the Shuttle. This follows the 5:36 a.m. EST downlink from the Shuttle to students in Ukraine. Ukrainian cosmonaut, Leonid Kadenyuk, aboard the Shuttle, is performing the experiment procedures being simulated in classrooms. B-roll of the event to accompany CUE-TSIPS stories will be available on NASA Television, Tuesday, Dec. 2, on the noon videofile.

NASA Television is available through the GE2 satellite system, located on Transponder 9C, at 85 degrees West longitude, frequency 3880.0 MHz, audio 6.8 Mhz.

Participating CUE-TSIPS Schools

Twenty high school educators from fourteen states were trained last spring as lead teachers for conducting the science experiment in their schools and presenting CUE-TSIPS workshops to peers around the country. The lead teacher schools are as follows:

Del Mar High School, San Jose, CA; Cocoa High School, Cocoa, FL; Steller Secondary Alternative School, Anchorage, AK; Lake Brantley High School, Altamonte Springs, FL; Leland High School, San Jose, CA; Moises Molina High School, Dallas, TX; Grissom School, Tinley Park, IL; Wilton High School, Wilton, CT; Parkview High School, Lilburn, GA; The Lawrenceville School, Lawrenceville, NJ; Roosevelt High School, Los Angeles, CA; Logan High School, Bellefontaine, OH; Dent Middle School, Columbia, SC; Augusta High School, Augusta, WI; Los Angeles Center for Enriched Studies, Los Angeles, CA; Central City High School, Central City, NE; Gervais High School, Gervais, OR; and Olathe East High School, Olathe, KS.

-more-

Media interested in covering the CUE-TSIPS activities of these schools should contact the schools directly.

NASA Administrator Visits CUE-TSIPS School - Monday, Dec. 8, 12:15 p.m., EST

On Monday, Dec. 8, to recognize the CUE-TSIPS experiment nationwide, NASA Administrator Daniel S. Goldin will visit the Grissom School, 1700 South 80th Avenue, Tinley Park, IL, from 12:15 p.m. - 1:30 p.m. EST. Goldin will talk to the students about their plant-growing experiences and how they compare with those of the Shuttle crew. Astronaut Mary Ellen Weber will accompany the Administrator on this visit. Media interested in covering this event should contact Roderic Young at NASA Headquarters, 202/358-4726.

Additional information about the CUE-TSIPS project can be found on the Internet at the following URL:

http://atlas.ksc.nasa.gov/education/general/cue.htm

Additional information on the STS-87 mission, which is scheduled to end on Dec. 5, can be found at the following URL:

http://shuttle.nasa.gov/index.html/

CUE-TSIPS is sponsored by NASA Headquarter's Life Sciences Division and Education Division.

-end-

News Release

National Aeronautics and
Space Administration

Washington, DC 20546
(202) 358-1600

For Release

November 25, 1997

Douglas Isbell
Headquarters, Washington, DC
(Phone: 202/358-1753)

Elizabeth Carter
Ames Research Center, Moffett Field, CA
(Phone: 650/604-2742)

NOTE TO EDITORS: N97-85

LUNAR PROSPECTOR MISSION BRIEFING SCHEDULED FOR DEC. 4

A press briefing on the upcoming Lunar Prospector mission to the Moon and its scientific goals has been scheduled for Thursday, Dec. 4, 1997, at 1 p.m. EST in the NASA Headquarters auditorium, 300 E St., SW, Washington, DC. The briefing will last approximately one hour and will be broadcast live on NASA Television.

The third flight in NASA's Discovery Program of lower-cost, highly focused Solar System exploration missions, Lunar Prospector is scheduled for launch at 8:32 p.m. EST on Jan. 5, 1998, from Spaceport Florida's new Launch Complex 46 in Cape Canaveral, FL. The small robotic mission is designed to provide the first global maps of the Moon's elemental surface composition and its gravitational and magnetic fields.

Participants in the press briefing are scheduled to include:

- Dr. Carl B. Pilcher, acting solar system exploration director, Office of Space Science, NASA Headquarters, who will speak on the purpose and goals of the Discovery Program;

- Mr. G. Scott Hubbard, Lunar Prospector mission manager from NASA's Ames Research Center, Moffett Field, CA, who will describe the development of Lunar Prospector and its mission operations;

- Dr. Alan Binder, principal investigator for Lunar Prospector and head of the Lunar Research Institute, Gilroy, CA, who will discuss the mission's five science instruments and their related research goals, and

- Dr. Michael Drake, director of the Lunar and Planetary Laboratory, University of Arizona, Tucson, who will give an overview of current scientific understanding of the Earth-Moon system and provide insights into the value of Lunar Prospector data for the study of the origin and evolution of the Solar System.

-more-

The briefing will include a short demonstration of the new Lunar Prospector web site on the Internet, which will enable the public to view user-friendly visualizations of science data transmissions from the spacecraft at the same time they are first seen by mission scientists.

The Web site is located at the following URL:

http://lunar.arc.nasa.gov/

NASA Television is available on GE-2, transponder 9C at 85 degrees West longitude, with vertical polarization. Frequency is on 3880.0 megahertz, with audio on 6.8 megahertz. Reporters who wish to observe and participate in the live broadcast of the press conference remotely may do so at participating NASA field centers.

-end-

Video Advisory

National Aeronautics and
Space Administration
Washington, DC 20546
(202) 358-1600

For Release
Nov. 26, 1997

Renee Juhans
Headquarters, Washington, DC
(Phone: 202/358-1712)

VIDEO ADVISORY: V97-119

THANKSGIVING WISHES FROM SPACE

Today's video package features footage of NASA Astronaut David Wolf, and cosmonauts Anatoly Solovyev and Pavel Vinogradev wishing a Happy Thanksgiving to all on Earth from the Mir space station.

ITEM 1: THANKSGIVING WISHES
Footage of message, show and tell of Thanksgiving dinner.

For more information contact Rob Navias at (281) 483-5111.

Video news file today at noon with replays during STS-87 Flight Day Highlights, scheduled every hour on the hour during the crew sleep cycle.

NASA Television is available on GE-2, transponder 9C at 85 degrees West longitude, with vertical polarization. Frequency is on 3880.0 megahertz, with audio on 6.8 megahertz.

-end-

NewsRelease

National Aeronautics and
Space Administration

Washington, D.C. 20546
(202) 358-1600

For Release

Dwayne Brown
Headquarters, Washington, DC
(Phone: 202/358-1726)

November 26, 1997

Michael Mewhinney
Ames Research Center, Moffett Field, CA
(Phone: 650/604-3937)

Fred A. Brown
Dryden Flight Research Center, Edwards, CA
(Phone: 805/258-3449)

Dave Phillips
The Boeing Company
(Phone: 314/232-1372)

RELEASE: 97-276

TAILLESS FIGHTER FLIGHT TESTS COMPLETE; PREVIEW FUTURE FIGHTER TECHNOLOGY

The NASA/Boeing X-36 Tailless Fighter Agility Research Aircraft successfully completed its flight research program -- demonstrating the feasibility of future tailless fighters achieving agility levels superior to today's best military fighter aircraft.

The project goals are to develop and demonstrate enhanced technologies to improve the maneuverability and survivability of future fighter aircraft. "All of our project goals were met or exceeded," said Mark Sumich, X-36 project manager at NASA's Ames Research Center, Moffett Field, CA.

During the final flight phase, the X-36 project team examined the aircraft's agility at low speed/high angles of attack and at high speed/low angles of attack. "We also achieved the final flight's goal to expand the X-36's speed envelope up to 206 knots (234 miles per hour)," Sumich said. "The aircraft's stability and handling qualities were excellent at both ends of the speed envelope."

Thirty-one flights were made during the flight research program at NASA's Dryden Flight Research Center, Edwards, CA. The first flight occurred on May 17. The final flight, which closed out the third phase of the program, took place on Nov. 12 and lasted 34 minutes. The X-36 flew a total of 15 hours and 38 minutes and used four different versions of flight control software. The aircraft reached an altitude of 20,200 feet and a maximum angle of attack of 40 degrees.

-more-

The 28-percent-scale X-36, built by the Boeing Phantom Works in St. Louis, MO, is designed to fly without the traditional tail surfaces common on most aircraft. The X-36 is 18 feet long with a 10 foot wingspan; three feet high; and weighs 1,270 pounds. The aircraft is powered by a Williams Research F112 turbofan engine that provides 700 pounds of thrust. The aircraft is remotely controlled by a pilot in a ground station cockpit, complete with a head-up display. The pilot-in-the-loop approach eliminates the need for expensive and complex autonomous flight control systems.

"We now have a proven research aircraft that can be used for future tests. As people become aware of the aircraft's capabilities, interest is increasing in using it for future flight tests," said Gary Jennings, X-36 program manager for Boeing Phantom Works.

With the flight test program completed, the X-36 will be placed in flyable storage condition in a hangar at Dryden. "Discussions are underway about what to do next with both of the X-36 aircraft," said Gary Cosentino, X-36 deputy project manager at Ames. "There is potential for other technologies, such as a highly advanced reconfigurable flight control system, to be incorporated on the aircraft and possibly flight tested in the future."

The X-36 Flight Test program team was comprised of employees from Boeing, Ames and Dryden. "The Dryden flight test infrastructure played a major role in supporting our operation and helped make us a success. The streamlined process of approval cycles allowed us to operate in a very efficient manner," Sumich said. "The fact that we completed 31 flights in only 25 weeks is an unparalleled accomplishment for a remotely piloted aircraft."

Ames and the Boeing Phantom Works developed the technologies required for a tailless fighter beginning in 1989. In 1993, the Phantom Works proposed the remotely piloted aircraft technology demonstration to validate the technologies in a real flight environment. In 1994, Phantom Works began fabrication of the two aircraft in its rapid prototyping facility in St. Louis. NASA and Boeing are full partners in the project that was jointly funded under a roughly 50/50 cost-sharing arrangement. The combined program cost for the development, fabrication, and flight testing of the two prototype aircraft is approximately $20 million. Ames leads the X-36 program; Dryden is hosting the program and providing range support.

-end-

Video Advisory

National Aeronautics and
Space Administration
Washington, DC 20546
(202) 358-1600

For Release
Nov. 27, 1997

Renee Juhans
Headquarters, Washington, DC
(Phone: 202/358-1712)

VIDEO ADVISORY: V97-120

LAUNCH OF NASA'S TROPICAL RAINFALL MEASURING MISSION (TRMM) TO BE AIRED ON NASA-TV THANKSGIVING DAY

NASA will televise the launch of the Tropical Rainfall Measuring Mission (TRMM) spacecraft from the Tanegashima Space Center in Japan, Thursday, Nov. 27.

3:30 EST Launch Coverage of TRMM begins on NASA-TV. Coverage will continue for the first hour of the two-hour launch window. A Video File containing animation of the TRMM spacecraft and illustrations of the science objectives will be played immediately following the launch.

4:30 EST Resume coverage of STS-87 Mission. (If TRMM launch occurs during the second hour of the window, it will be replayed at 6:30 EST. **Note: Replays are subject to ongoing Shuttle mission events.**)

6:30 EST Replay TRMM launch and Video File.

TRMM is the first Earth science observatory dedicated to studying the properties of tropical and subtropical rainfall. This joint NASA/Japanese Space Program mission will obtain and study multi-year science data sets of tropical and subtropical rainfall measurements to understand how interactions between the sea, air and land masses produce changes in global rainfall and climate.

Information on TRMM is available via the Internet at http://trmm.gsfc.nasa.gov.

For more information contact Allen Kenitzer at 301-286-2806.

NASA Television is available on GE-2, transponder 9C at 85 degrees West longitude, with vertical polarization. Frequency is on 3880.0 megahertz, with audio on 6.8 megahertz.

-end-

Video Advisory

National Aeronautics and
Space Administration

Washington, DC 20546
(202) 358-1600

For Release
Dec. 2, 1997

Debbie Rivera
Headquarters, Washington, DC
(Phone: 202/358-1743)

VIDEO ADVISORY: V97-121

PORTRAIT OF OUR PLANET

Today's video file will include the first continuous, global look at Earth's biosphere. This portrait was taken by NASA's Sea-viewing Wide Field-of-view Sensor (SeaWIFs), giving scientists a method to monitor global plant life for the first time.

ITEM 1: COMPLETE GLOBAL BIOSPHERE

ITEM 1a: OCEAN AREAS AND VEGETATION
Image begins with ocean color, then adds terrestrial vegetation and a zoom to North America.

ITEM 1b: ANOTHER VIEW
This image is of the globe only with no zoom.

ITEM 1c: DETAILED VIEWS
Beginning with ocean color then dissolving to show terrestrial biosphere, these images are of the following areas: North America, Western Canada and Alaska, Europe, Australia, Japan, South America and Africa.

ITEM 1d: INTERVIEW -- CHARLES McCLAIN, SEAWIFS PROJECT SCIENTIST

For more information contact David Steitz at (202) 358-1730 or Wade Sisler at (301) 286-6256.

Video news file is today at noon with replays during STS-87 Flight Day Highlights scheduled every hour on the hour during the crew sleep cycle.

NASA Television is available on GE-2, transponder 9C at 85 degrees West longitude, with vertical polarization. Frequency is on 3880.0 megahertz, with audio on 6.8 megahertz.

-end-

News Release

National Aeronautics and
Space Administration
Washington, DC 20546
(202) 358-1600

For Release

December 2, 1997

Douglas Isbell
Headquarters, Washington, DC
(Phone: 202/358-1547)

Allen Kenitzer
Goddard Space Flight Center, Greenbelt, MD
(Phone: 301/286-2806)

RELEASE: 97-277

NASA SELECTS EARTH SCIENCE INFORMATION PARTNERS

NASA has selected two dozen proposals, in two categories, to develop working prototypes of innovative uses and applications of the Agency's Earth science data and related research.

Known as the Earth Science Information Partners (ESIPs), the awards respond to a July 1996 National Research Council recommendation that NASA evaluate alternative implementation of product generation, publication and user services for the agency's planned Earth Observing System (EOS) science data system. The evaluation will be initiated beginning with a limited set of pilot or prototype projects operating in a federated, rather than a centrally managed architecture. The Type 2 and 3 ESIPs, together with NASA, will determine the management, system interoperability and organizational interfaces necessary to establish the Working Prototype Federation.

Two Cooperative Agreement Notices issued by NASA in May 1997 solicited proposals from all sources, including industry and academia, reflecting two of the three types of ESIPs (Type 1 functions are currently performed by the existing Distributed Active Archive Centers). Successful ESIP 3 organizations are expected to become financially self-sustaining by the end of this pilot project.

Type 2 ESIPs are focused on data and information products in support of global change research that are developmental or research-oriented, with emphasis on flexibility and creativity in meeting advanced scientific applications. Type 3 ESIPs will be responsible for extending the benefits of NASA Earth science data and information beyond basic research to a broader user community including private industry, value-added companies, state and local governments, and non-profit organizations.

-more-

Twelve each of Type 2 and Type 3 working prototype ESIPs were selected for the experimental phase of defining, demonstrating and validating the federation approach to performing selected major functions of the EOS Data and Information System (EOSDIS). Total funding for this set of initial working prototype ESIPs is approximately $50 million over the 3- to 5-year lifetime of the selected projects.

"This is a significant step in the evolution of our approach to Earth system science data archiving and distribution," said William Townsend, Acting Associate Administrator for the NASA Office of Mission to Planet Earth, Washington, DC. "The Type 2 ESIPs concept is comparable to our move toward principal investigator-driven spacecraft that are smaller, cheaper, and faster. With our Type 3 ESIPs, we are working cooperatively with the private sector and the broader user community to greatly extend the use of our data. This future-oriented strategy is just becoming possible because of the tremendous pace of information technology innovation. We have a nice mix of projects to learn from, and I have very high expectations for this experiment."

From 50 Type 2 proposals submitted, NASA has selected three proposals focusing on land-cover and land-use change issues, three proposals focusing on oceanography or hydrology, three proposals concentrating on atmospheric research data, and three proposals that integrate interdisciplinary issues, including one on environmental factors in public health. Two proposals have a U.S. regional focus.

The selected Type 2 ESIPs and their titles are:

* "The Distributed Oceanographic Data System: A Framework for Access to Scientific Data in the EOS Federation," led by Peter Cornillon, University of Rhode Island, Narragansett.

* "The Earth System Science Workbench: A Scaleable Infrastructure for ESIPs," led by James Frew, University of California, Santa Barbara.

* "Seasonal to Interannual Earth Science Information Partner (SIESIP)," led by Menas Kafatos, George Mason University, Fairfax, VA.

* "Progressive Mining of Remotely Sensed Data for Environmental and Public Health Applications," led by Chung-Sheng Li, International Business Machines, Yorktown Heights, NY.

* "A Web-Based System for Terrestrial Environmental Research," led by Berrien Moore, University of New Hampshire, Durham.

* "ESP2Net: Earth Science Partners' Private Network," led by Richard Muntz, University of California, Los Angeles.

* "Evolution of Snow Pack in the Southwestern United States: Spatial and Temporal Variability from a Remotely Sensed and In Situ Data Set," led by James J. Simpson, Scripps Institute of Oceanography, University of California, San Diego.

* "Tropical Rainforest Information Center," led by David L. Skole, Michigan State University, East Lansing.

* "An On-Demand Data Processing and Delivery System for Climate Studies Using Passive Microwave Data Sets," led by Roy W. Spencer, Marshall Space Flight Center, Huntsville, AL.

* "A Landcover Earth Science Information Partnership," led by John R. G. Townshend, University of Maryland, College Park.

* "GPS Environmental & Earth Science Information System: GENESIS," led by Thomas P. Yunck, Jet Propulsion Laboratory, Pasadena, CA.

* "Improved Ocean Radar Altimeter and Scatterometer Data and Atmosphere-Ocean Model Simulation for Coastal and Global Change Studies," led by Victor Zlotnicki, Jet Propulsion Laboratory, Pasadena, CA.

From 65 Type 3 proposals submitted, NASA has selected 12 proposals that cover roughly 15 scientific disciplines: Five proposals deal with regional applications; three proposals focus on agriculture; two proposals focus on coastal and marine applications; three proposals deal with education and public outreach; and two proposals provide special applications to extend MTPE data to non-Earth science research communities.

The selected Type 3 ESIPs and their titles are:

*"Institutionalizing MTPE Data for Land and Environmental Management," led by Thomas Burk, University of Minnesota, St. Paul.

*"California Land Science Information Partnership," led by Gary Darling, California Resources Agency, Sacramento.

*"Performing a Regional Assessment and Prototyping Internet Accessible MTPE Products for the Upper Rio Grande Basin," led by Stanley Morain, University of New Mexico, Albuquerque.

* "Integrating Environmental and Legal Information Systems," led by Konstantinos Kalpakis, University Space Research Association (USRA), Greenbelt, MD.

* "A Public Access Resource Center (PARC) Empowering the General Public to Use EOSDIS Phase III Operations," led by George Seielstad, Upper Midwest Aerospace Consortium (UNAC), University of North Dakota, Grand Forks.

*"WeatheRoute," led by Kevin Meagher, Reading Information Technology, Inc., Reading, PA.

*"MTPE Education Series," led by Catherine Gautier, Planet Earth Science, Inc., Santa Barbara, CA.

*"Integration and Application of MTPE Data and Information to the San Francisco Bay Area and Monterey Bay Region," led by David Etter, Bay Area Shared Information Consortium (BASIC), Mountain View, CA.

*"Museums Teaching Planet Earth," led by Patricia Reiff, Rice University, Houston, TX.

*"Terrain Intelligence Products from EOS Sensor Data," led by Douglas Kliman, MRJ Associates, Tucson, AZ.

*"NBC News and Information: Extending MTPE Data to the World," led by David Jones, WRC-TV4, Washington, DC.

*"MTPE-Derived Data Products for the Fisheries," led by Patrick Simpson, Scientific Fishery Systems, Inc., Anchorage, AK.

NASA's Mission to Planet Earth enterprise is a long-term research program designed to study the Earth's land, oceans, air, ice and life as a total environmental system.

-end-

NASAFacts

National Aeronautics and
Space Administration

Washington, D.C. 20546
(202) 358-1600

For Release

December 3, 1997

Space Technology Used to Detect and Treat Breast Cancer

NASA research and technology is revolutionizing American lifestyles in many ways, including improving ways to diagnose and treat breast cancer. NASA, teaming with industry, academia and government, is applying aerospace research and technology to battle the leading cause of death among American women ages 35 to 50.

IN YOUR DOCTOR'S OFFICE TODAY

Digital Breast Imaging Technology

From NASA's investigations into the mysteries of the universe comes technology to better detect breast cancer. Silicon chips used in the Hubble Space Telescope were adapted so doctors can easily detect tiny spots in breast tissue and analyze the tissue using a needle rather than subject a patient to painful surgery. This procedure also eliminates scarring or disfigurement, requires half the time of traditional techniques, reduces exposure to x-rays, and reduces costs from $3500 to $850.

TOMORROW'S TECHNOLOGY

Next Generation Digital Imaging Mammography

Space-based instruments studying the atmosphere will soon be in the medical examination room. NASA is developing a mammogram to produce an image of the entire breast and provide a better image -- two times better than currently available -- to identify tumors. Current technology does not allow doctors to view the entire breast. This approach is significant because it will accommodate different tissue density, which is particularly important for younger women who have more dense tissue.

Telemammography

NASA expertise in transmitting high-resolution digitized photographs has led to improvements in global satellite networks. Soon, women in rural areas will have a link to medical experts across the country using these networks. This

new technology will be more cost-effective and faster than traditional transmission of data through telephone lines, which can take hours to transmit one image. High-resolution mammography also will help doctors detect breast cancer tumors earlier.

Tissue Growth in the NASA Bioreactor
NASA uses the microgravity of space to grow human tissue for research and transplantation and to gain valuable knowledge important to the treatment of breast and ovarian cancer. The NASA-designed Bioreactor is a unique tissue culture chamber that grows cells in three-dimensions. These tissues, similar to tissues found in the body, will help scientists understand cancer growth and how the human immune system responds.

Advanced Ultrasound Imaging Technology
Mars Pathfinder technology developed to enhance pictures is being modified to make three-dimensional models of breast tissue. Combining ultrasound with advanced computing, the imaging devise discerns cancerous from healthy tissue by comparing changes in shape and analyzing the ultrasound signal. This enables doctors to differentiate tissue more accurately without using painful invasive procedures.

Smart Robot "Brain Surgeon" Probe Adapted for Cancer Detection
Technology being developed for surgery on astronauts in space is being adapted to help physicians operate on delicate parts of the human body and minimize harm to healthy tissue. The robot maps the physical characteristics of the brain, allowing the surgeon to make precise movements and reduce potential damage to nearby healthy tissue. Researchers plan to teach the robot feel and see tumors in other parts of the body, such as the breast. One component includes a small probe that may allows real-time measurement and analysis of a breast cancer tumor to determine its severity and appropriate treatment.

Three-Dimensional Tissue Images
NASA is developing virtual reality computer technology to treat astronauts in possible medical emergencies. One application of the software combines a series of MRI scans to create clear, accurate, three-dimensional images of breast and tumor tissue. Physicians wearing 3-D glasses can see the tissue from all angles on the computer screen. Once the technique is fully developed, physicians will be able to visualize borders of tumors more clearly than current technology affords. NASA is also working with sonogram scans to use sounds to visualized objects in the body

Breast Reconstruction
The virtual reality computer technology is also being developed to assist surgeons with complex facial reconstruction. The surgeon performs vitural surgery on the 3-D computer image of the patient using a, big-screen

workbench, special goves, computer tracking wands and software to replace soft tissues to see how the patient may look like after facial reconstruction. This technology may help mastectomy patients needing breast reconstruction and help other surgical procedures such as correcting deformities of the head and face.

Women's Outreach Initiative, Office of Public Affairs, National Aeronautics and Space Administration, October 1997

News Release

National Aeronautics and
Space Administration

Washington, DC 20546
(202) 358-1600

For Release

December 3, 1997

Dwayne Brown
Headquarters, Washington, DC
(Phone: 202/358-1726)

Fred Brown
Dryden Flight Research Center, Edwards, CA
(Phone: 805/258-2663)

Eric Dunn
Pacific Missile Range Facility, Kekaha, Kauai, Hawaii
(Phone: 808/335-4560)

NOTE TO EDITORS: N97-087

NASA SOLAR-POWERED ALTITUDE RECORD TO BE DEDICATED TO CHALLENGER ASTRONAUT

NASA representatives will present a memorial plaque to dedicate the world altitude record (for a propeller-driven aircraft) to the memory of Col. Ellison S. Onizuka at a ceremony beginning at 3 p.m. EST on Dec. 10, 1997, at the U.S. Navy's Pacific Missile Range Facility, Barking Sands, Kauai. The record symbolizes reaching for the heavens and striving for excellence.

The plaque will be presented to the Onizuka family and the Hawaiian community. Another plaque will be provided to the Onizuka Museum located on Kona. Onizuka, Hawaii's first astronaut, was killed in the Space Shuttle Challenger accident in January 1986.

The record of 71,530 feet was set by the solar-powered Pathfinder on July 7, 1997. The remotely piloted Pathfinder is one of several aircraft in NASA's Environmental Research Aircraft and Sensor Technology program managed by NASA's Dryden Flight Research Center, Edwards, CA.

Pathfinder is a research vehicle developed to explore the feasibility of flight at very high altitudes and for extreme duration. Once the basic feasibility is demonstrated for continuous day/night operations, then month-long science flights will be conducted for a variety of missions including environmental monitoring, atmospheric sampling for next generation high speed transports, hurricane surveillance, and telecommunications relays. The record flight marked a significant step on the path to maturation of these kinds of flight vehicles.

-more-

Hawaii was chosen as an optimum location for testing the solar-powered Pathfinder due to high levels of solar irradiance, available airspace and radio frequency, and diversity of terrestrial and coastal ecosystems.

Media wishing to cover the event should be at the Pacific Missile Range Facility by 2 p.m. EST. A media briefing will be held at 2:30 p.m. EST. For accreditation and more information contact Eric Dunn at 808/335-4560.

-end-

News Release

National Aeronautics and
Space Administration

Washington, DC 20546
(202) 358-1600

For Release

Don Nolan-Proxmire
Headquarters, Washington, DC
(Phone: 202/358-1983)

December 3, 1997

John Bluck
Ames Research Center, Moffett Field, CA
(Phone: 650/604-5026)

NOTE TO EDITORS: N97-088

NASA SOFTWARE CLEARLY DISPLAYS BREAST TUMOR SCANS IN 3-D

Clear, accurate three-dimensional (3-D) images made from a series of scans of a breast and tumor will be shown by NASA at the Radiological Society of North America Conference, McCormick Place, Booth 9322, Chicago, IL, from Nov. 30 until Dec. 5.

Each high fidelity 3-D picture is known as a "reconstruction," a computerized object that a physician wearing 3-D glasses can see from all angles on a computer monitor.

"These reconstructions are highly accurate 3-D visual models of affected breasts with tumors. Once this technique is fully developed, we think physicians will be able to visualize the borders of tumors more clearly," said Dr. Muriel Ross of NASA's Ames Research Center, Moffett Field, CA. Ross is director of the Ames Biocomputation Center which uses computer technology to improve medical practices.

In the new technique, a series of Magnetic Resonance Imaging (MRI) breast scans are combined to make a 3-D image using Reconstruction of Serial Sections (ROSS) software that was developed in the Biocomputation Center. The method eliminates "noise," or interference, seen in more common renderings of breast tissues done in many clinics.

"For this initial reconstruction, we combined features of the ROSS software we have been using with another version we use for Computed Axial Tomography (CAT) scans," Ross said. "Eventually, a special version of the software will be developed for MRI. In the meantime, we have demonstrated that high fidelity, 3-D reconstructions can be made from typical MRI breast scans."

Normally, mammograms are used for initial screening for breast cancer. If a suspicious lump is detected, a follow-up MRI using contrast medium can be conducted. "The medium is injected into the patient's blood stream. This medium rapidly concentrates in the tumor which shows in the scan as a bright area. But even with this technique, it is hard to see where the tumor begins and ends," Ross said.

-more-

"Later, we intend to work with sonograms," she said. A sonogram is a scan that uses sound to visualize objects inside bodies. "We want to reduce noise that comes from multiple, echo-like reflections of sound coming from tissues. Borders of objects can be difficult to define because echoes bounce and can interfere with one another."

The NASA Biocomputation Center at Ames will become part of a larger National Biocomputation Center soon to be established by NASA and Stanford University, Palo Alto, CA, according to Ross. "The new center will be a national resource to further the use of virtual reality in medicine," Ross said. Virtual reality is a computer-created environment that simulates a real-life situation.

In work related to the breast tumor 3-D imaging program, the NASA-Stanford biocomputation team is working on virtual reality computer tools to aid in complex facial reconstructive surgery. Surgeons can use a big-screen workbench, special gloves, computer tracking wands and software to manipulate a 3-D computer image of the patient.

"The surgeon can work on the virtual reality image and replace the soft tissues to see what the patient may look like after facial reconstruction. If the doctor doesn't like the results, it's easy enough to start all over," Ross said.

The team is interested in working with mastectomy patients needing breast reconstruction, and with children who need reconstructive surgery to correct deformities of the head and face. Eventually the system could be used in other medical specialties or surgical procedures.

Virtual reality will allow surgeons to rehearse complex procedures before an operation. In addition, the team expects virtual reality will be a powerful teaching tool for medical students. A digital library of computerized "virtual patients" will be created that physicians can use to share information about uncommon procedures, according to researchers.

Development of the breast tumor enhancement software follows an agreement that enlists NASA technologies to fight breast cancer and other women's illnesses. The agreement was signed in October in Washington, DC, by representatives of NASA and the Department of Health and Human Services. Major areas of concern are cancer, reproductive health, pregnancy, osteoporosis and education.

-end-

Additional information is available on NASA technologies being used to detect and treat breast cancer by calling the NASA HQ Newsroom at 202/358-1600 or via the the Internet at URL:

http://www.hq.nasa.gov/office/pao/facts/cancer_tech.html

Video Advisory

National Aeronautics and
Space Administration
Washington, DC 20546
(202) 358-1600

For Release
Dec. 3, 1997

Renee Juhans
Headquarters, Washington, DC
(Phone: 202/358-1712)

VIDEO ADVISORY: V97-122

BREAST TUMORS: 3-D IMAGING

Today's video file features new 3-D images of a breast and tumor that were constructed by combining a series of Magnetic Resonance Imaging (MRI) and Computed Axial Tomography scans. This innovative technique, developed at NASA's Ames Research Center, will eliminate "noise" or "interference" seen in most other renderings of breast tissues.

ITEM 1: 3-D Breast Tumor
Mammography images before reconstruction software and breast tumor scan images.

For more information contact Don Nolan-Proxmire at (202) 358-1983 or John Bluck at (650) 604-5026.

Video news file is today at noon with replays during STS-87 Flight Day Highlights scheduled every hour on the hour during the crew sleep cycle.

NASA Television is available on GE-2, transponder 9C at 85 degrees West longitude, with vertical polarization. Frequency is on 3880.0 megahertz, with audio on 6.8 megahertz.

-end-

News Release

National Aeronautics and
Space Administration
Washington, DC 20546
(202) 358-1600

For Release

December 5, 1997

Donald Savage
Headquarters, Washington, DC
(Phone: 202/358-1547)

Michael Braukus
Headquarters, Washington, DC
(Phone: 202/358-1979)

Dave Drachlis
Marshall Space Flight Center, Huntsville, AL
(Phone: 205/544-0034)

RELEASE: 97-278

ADVANCED X-RAY ASTROPHYSICS FACILITY DELIVERY DELAYED

TRW Space and Electronics Group, Redondo Beach, CA, has notified NASA that it will be unable to deliver the Advanced X-ray Astrophysics Facility (AXAF) to NASA's Kennedy Space Center, FL, on June 1, 1998, as required by contract, because it has experienced delays in assembly and testing of the facility. TRW is NASA's prime contractor for the observatory.

NASA and contractor officials met at NASA Headquarters in Washington, DC, this week to discuss the issue. While no new delivery date was agreed upon, the agency has directed TRW to develop a plan of action that would show how the contractor can minimize impact to the June 1 delivery.

Although a delay in delivery could delay the launch, currently scheduled for August 1998 aboard Space Shuttle Columbia's STS-93 mission, and could result in additional program costs, the exact impact is not yet known.

"The delay in delivery of the observatory is unfortunate," said Fred Wojtalik, NASA Marshall Space Flight Center observatory projects office manager in Huntsville, AL. "However, our first priority is to launch a world-class observatory which has been thoroughly tested and meets all requirements. We will work closely with TRW to ensure that happens."

- more -

The delay is primarily due to TRW's difficulty in configuring and programming its Integrated Spacecraft Automated Test System to test the observatory before it is delivered to NASA.

The Advanced X-ray Astrophysics Facility is expected to play a vital role in answering fundamental questions about the universe, including its age and size, and will probe the nature and amounts of so-called "dark matter," providing unique insight into one of nature's great puzzles. The observatory also will allow scientists to see and measure the details of hot gas clouds in clusters of galaxies; observe X-rays generated when stars are torn apart by the incredibly strong gravity around massive black holes in the centers of galaxies; and provide images that will help understand how exploding stars create and disperse many of the elements necessary for new stars, planets and life.

The Marshall Space Flight Center manages development of the observatory for the Office of Space Science at NASA Headquarters. Made of glass purchased from Schott Glaswerke, Mainz, Germany, the telescope's mirrors were built by Hughes Danbury Optical Systems, Danbury, CT, and assembled by Eastman-Kodak Company, Rochester, NY. The science instruments are being integrated into the science instrument module at Ball Aerospace and Technologies Corporation, Boulder, CO, before being tested and shipped to TRW.

- end -

News Release

National Aeronautics and
Space Administration

Washington, DC 20546
(202) 358-1600

Don Savage
Headquarters, Washington, DC
(Phone: 202/358-1547)

For Release
December 4, 1997

Tammy Jones
Goddard Space Flight Center, Greenbelt, MD
(Phone: 301/286-5566)

Ray Villard
Space Telescope Science Institute, Baltimore, MD
(Phone: 410/338-4514)

RELEASE: 96-279

ONE STAR'S LOSS IS ANOTHER'S GAIN: HUBBLE CAPTURES BRIEF MOMENT IN LIFE OF LIVELY DUO

Some stars in double-star systems have found a quick way to lose weight by dumping their extra pounds onto their companions. Astronomers using NASA's Hubble Space Telescope have discovered such a case in the double-star system Phi Persei. A "rapid diet" program has trimmed an aging, once massive star to a lean one-solar mass, while the once mild-mannered, moderate-sized companion has bulked up to a hefty nine-solar masses and is spinning so violently that it's flinging gas from its surface. This observation has allowed astronomers to catch a glimpse of an unusual, fleeting moment in the life of a massive star in a double-star system.

"We have seen massive star binaries at the end of their lives, when one star has collapsed to become a neutron star," says Douglas Gies of the Center for High Angular Resolution Astronomy at Georgia State University, Atlanta. "There are about six dozen of those known in our galaxy. But what we hadn't seen before is the phase just prior to the collapse of the aging star. The Hubble observations dramatically show how severely a star's material can be removed through the gravitational influence of a nearby companion."

What Gies and his team have seen is an opportunistic star that has taken advantage of an aging, ailing partner. After consuming most of its hydrogen -- the fuel that keeps its thermonuclear furnace running -- the aging star swelled up and began jettisoning its mass until only its bare core was left. The companion star cannibalized the discarded material, thereby increasing in size. Gies calls the stripped-down star a subdwarf, a type of aging star that has passed the expansion phase -- by swelling and puffing away its outer layers -- and is on its way to becoming a fading white dwarf. Yet this aging, stripped-down star, which has the same mass as the Sun, is nine times hotter than the Sun at 95,000 degrees Fahrenheit and is very bright.

-more-

The subdwarf would be the brightest object of its class in the sky (a sixth-magnitude star) if it could be seen alone. If placed at the Sun's distance, it would appear 200 times brighter than the Sun. However, the beefed-up companion is ten times brighter in visible light than the subdwarf, which is lost in its glare and eluded detection for many years.

The subdwarf was detected by the Hubble telescope's Goddard High Resolution Spectrograph (which was removed from Hubble last February during the second servicing mission), allowing scientists to identify its spectral signature. Gies' analysis of these observations will appear in the Jan. 20, 1998, issue of the Astrophysical Journal. With the Hubble data, he pieced together a better picture of life in this double-star system, especially how the beefed-up companion gained its extra mass.

By puffing away most of its mass, the aging, stripped-down star has given new life and a new identity to its companion. The roughly 10-million-year-old companion has potentially doubled its lifetime because it has gained a vast amount of hydrogen fuel, which is needed to maintain its thermonuclear furnace. By beefing up, the companion also has changed its identity from a normal, moderately massive star to a "Be" star, a type of hot star with a broad, flattened disk of hydrogen gas swirling around it, much like the rings of Saturn. Based on measurements taken by astronomers at the U.S. Naval Observatory, the disk is eight times wider than the star.

The disk formed from gas spun off the rapidly rotating "Be" star. What causes the fast spin of "Be" stars has been a mystery to astronomers. Now the Hubble telescope observations of Phi Persei offer at least a partial explanation: The gas discarded from a nearby swelling star strikes the companion off-center, causing it to spin faster.

"The companion is now rotating so fast (one million mph or 450 kilometers per second at its equator) that the star is distorted into a flattened oblate figure in which gravity can barely maintain its hold on the star's outer layers," Gies explains.

This new information about the stripped-down star and its companion leads scientists to speculate about their past. Before the exchange of material, the stripped-down subdwarf was the more massive of the two, about six times more massive than the Sun. Its companion was slightly less bulky, about five solar masses. Such massive stars usually race through life at a faster pace than most stellar objects, ending their lives in one big supernova explosion. However, stars in binary systems live differently. When the once massive subdwarf entered its twilight years about one million years ago, it swelled in size as it began using up its hydrogen fuel. A single massive star would have eventually exploded, but the presence of the companion prevented the once-massive star from suffering such a violent fate. Instead, the once-massive star dumped most of its outer layers onto its companion, and now may be heading to a quiet demise.

A curious destiny may await this pair. As long as the "Be" star doesn't break apart, it will live for another 10 million years because of the hydrogen fuel it acquired from its companion. Then it will swell during the expansion phase and possibly dump some of its mass back onto the subdwarf, which will have evolved into a white dwarf. The subdwarf then might grow in mass and eventually explode as a supernova. Or, the companion might swell up so much that it would engulf the white dwarf, eventually tossing out its material in mix-master action.

"The beefed-up 'Be' star has won a new lease on life, but its ultimate fate will be determined by the corpse of its former companion, which remains in orbit uncomfortably nearby," Gies concludes. Phi Persei is 720 light-years away in the constellation Perseus, visible in the autumn evening sky in the northern hemisphere, just north of the Andromeda Galaxy, M31. The double-star system is visible as a fourth-magnitude star.

The Space Telescope Science Institute is operated by the Association of Universities for Research in Astronomy, Inc. (AURA) for NASA, under contract with the Goddard Space Flight Center, Greenbelt, MD. The Hubble Space Telescope is a project of international cooperation between NASA and the European Space Agency (ESA).

- end -

EDITORS NOTE: A photo and caption are available via the World Wide Web at http://oposite.stsci.edu/pubinfo/PR/97/39.html and via links in http://oposite.stsci.edu/pubinfo/Latest.html or http://oposite.stsci.edu/pubinfo/Pictures.html.

Images are available at
http://oposite.stsci.edu/pubinfo/gif/phiper.gif (GIF) and
http://oposite.stsci.edu/pubinfo/jpeg/phiper.jpg (JPEG).

Image files also may be accessed via anonymous ftp from oposite.stsci.edu in /pubinfo:gif/phiper.gif (GIF) and jpeg/phiper.jpg (JPEG).

Higher resolution digital versions (300 dpi JPEG) of the release photograph are available in /pubinfo/hrtemp: 97-39.jpg (color) and 97-39bw.jpg (black & white).

Video Advisory

National Aeronautics and
Space Administration
Washington, DC 20546
(202) 358-1600

For Release
Dec. 8, 1997

Renee Juhans
Headquarters, Washington, DC
(Phone: 202/358-1712)

VIDEO ADVISORY: V97-124

SUNNY EXPLOSIVES MAKE A BRIGHTER DAY; SOLO SPIRIT: UP, UP, AND AWAY!

Today's video file features images that NASA scientists have used to develop new theories on the cause of coronal mass ejections (CMEs) which are explosive eruptions of electrically charged gas from the Sun. Scientists believe CMEs can trigger magnetic storms on Earth that brighten daylight and occasionally disturb satellites, navigation systems, and power grids. Also on NTV is b-roll of engineers at NASA's Jet Propulsion Laboratory working on a NASA science instrument package, which may one day study the atmosphere of Mars or Venus, that will fly aboard the Solo Spirit balloon.

ITEM 1: SUN EXPLOSIVES
ITEM 1a: THE SUN'S HALO
ITEM 1b: SOLAR ARCADE
ITEM 1c: MAGNETIC STORM SIMULATION
ITEM 1d: SOHO ANIMATION

For more information contact Wade Sisler at (301) 286-6256.

ITEM 2: AROUND THE WORLD
ITEM 2a: INTERVIEWS

For more information contact Doug Isbell at (202) 358-1753 or Mary Hardin at (818) 354-5011.

Video news file today at noon, 3, 6, 9 p.m. and midnight EST.

NASA Television is available on GE-2, transponder 9C at 85 degrees West longitude, with vertical polarization. Frequency is on 3880.0 megahertz, with audio on 6.8 megahertz.

-end-

News Release

National Aeronautics and
Space Administration

Washington, DC 20546
(202) 358-1600

Douglas Isbell
Headquarters, Washington, DC
(Phone: 202/358-1753)

For Release
December 8,1997

Mary Hardin/Diane Ainsworth
Jet Propulsion Laboratory, Pasadena, CA
(Phone: 818/354-5011)

Tony Fitzpatrick
Washington University, St. Louis, MO
(Phone: 314/935-5230)

RELEASE: 97-280

NASA PAYLOAD TO MONITOR ATMOSPHERE DURING SOLO SPIRIT BALLOON FLIGHT AROUND THE WORLD

A NASA science instrument package that may one day study the atmosphere of Mars or Venus will fly aboard adventurer/businessman Steve Fossett's Solo Spirit balloon in December, as he makes his second attempt to be the first person to fly solo around the world.

The prototype instrumentation is being provided by NASA's Jet Propulsion Laboratory (JPL), Pasadena, CA. The 7.5-pound package will measure the balloon's latitude, longitude and elevation, and the surrounding atmospheric temperature, pressure, humidity and vertical wind velocity. The scientific data and knowledge gained from the flight will be used by Earth scientists under the sponsorship of NASA's Office of Mission to Planet Earth enterprise.

Scientists at Washington University in St. Louis, MO, the mission control center for Fossett's attempt, invited JPL to fly the scientific payload.

"NASA's Jet Propulsion Laboratory is actively developing a program to fly balloons in the atmospheres of other planets. We are very excited with this opportunity to test this payload in Earth's atmosphere, and are looking forward to data that could be applied to our future missions," said Dr. Jonathan M. Cameron, the payload team leader at JPL.

The science payload will gather information from the troposphere, the lowest layer of Earth's atmosphere, during a continuous, two-week period as the balloon flies through the mid-northern latitudes. Fossett's balloon is expected to fly at an average altitude of about 23,000 feet.

-more-

JPL will receive raw data from the payload telemetry system through a commercial satellite. These data will be converted into scientific measurements and relayed to Washington University, where they will be posted on a Web site so the public can follow the flight.

Eventually, a version of the NASA prototype may fly in the atmosphere of Mars or Venus, on a robotic balloon called an aerobot. Like Fossett's balloon, the aerobot would vary its altitude to steer through the atmosphere.

"This experiment will simulate a planetary mission with an aerobot payload mounted on a balloon," said Dr. Raymond E. Arvidson, professor and chair of Earth and Planetary Sciences at Washington University, and the science coordinator for the payload. "In addition, the observations to be made during Solo Spirit's flight offer an outstanding opportunity to educate the public on the characteristics and dynamics of the lower atmosphere."

A low fuel supply and other problems ended Fossett's earlier solo flight attempt on Jan. 20, 1997, although he set a new balloon distance record at 10,360 miles (16,700 kilometers.)

Fossett will again launch from St. Louis's Busch Stadium when flying conditions are optimal. This winter's flight is expected to last 15 days. The launch window opens in mid-December and closes at the end of January 1998.

"This circumnavigation of the Earth by Solar Spirit will provide valuable experience to JPL in carrying out planetary aerobot missions," said Dr. James A. Cutts, manager of JPL's special projects office. "We will soon have the technological capability to carry out aerobot missions to circumnavigate both Mars and Venus that will collect unique scientific observations to complement the information obtained by orbiting spacecraft and surface vehicles."

After Fossett's flight, Washington University will publish all of the science data on NASA's Planetary Data System Geosciences Node, housed at the university and available on the Internet.

To follow Fossett's flight, visit: http://www.wustl.edu/solo/

To learn more about JPL's aerobot program, visit:
http://robotics.jpl.nasa.gov/aerobot/

The scientific payload is managed by JPL, a division of the California Institute of Technology, for NASA's Office of Mission to Planet Earth, Washington, DC. This office directs a long-term science research program to study the Earth's land, air, oceans, ice and life as a total environmental system.

-end-

News Release

National Aeronautics and
Space Administration
Washington, DC 20546
(202) 358-1600

Beth Schmid
Headquarters, Washington, DC
(Phone: 202/358-1600)

For Release
December 8, 1997

RELEASE: 97-281

NASA FILLED THE CALENDAR IN 1997

From the surface of Mars to a possible newly discovered ocean beneath the ices of Europa, NASA activities were in the news in 1997. Background information and still images are available to news media to illustrate the top 10 NASA stories of the year, with supporting material also available via the Internet and the World Wide Web at the URLs listed. The video to accompany these stories will be available on NASA TV in mid-December; a video advisory will be issued at that time.

Mars Pathfinder

One of the most watched events of the year occurred 141 million miles from Earth, as hundreds of millions of people followed the July 4 landing of NASA's Pathfinder spacecraft on Mars, the first landing on the Red Planet since the Viking missions in 1976 and the first ever to use air bags to cushion impact on the surface. Shortly after Pathfinder's landing, the Sojourner rover began its own exploration of nearby rocks and other features. The images from both craft were posted to the Internet, where more than 500 million "hits" were recorded by the end of July. **http://mpfwww.jpl.nasa.gov/default.html**

Hubble Servicing Mission -- "New" Telescope for the New Millennium

During five days of spacewalks, astronauts flawlessly performed major maintenance and upgrades to the orbiting Hubble Space Telescope, replacing older hardware with two dramatically improved instruments that are helping astronomers probe the universe in greater detail than ever before. Also this year, Hubble uncovered over 1,000 bright, young star clusters bursting to life in a brief, intense, brilliant "fireworks show" at the heart of a nearby pair of colliding galaxies. The Hubble image of the galactic collision was printed on the front pages of newspapers around the world as well as on the cover of Newsweek magazine. **http://oposite.stsci.edu/pubinfo/PR.html** and **http://oposite.stsci.edu/pubinfo/sm97/**

Shuttle-Mir Goes Forward

In 1997, three U.S. astronauts -- Jerry Linenger, Michael Foale and now, David Wolf -- added to NASA's long duration record aboard Mir and to the Agency's ability to gain experience and knowledge unavailable elsewhere. Despite problems on the Mir, NASA Administrator Daniel S. Goldin concluded that Shuttle-Mir has a thorough review process which warrants continued American participation in the program.
http://shuttle-mir.nasa.gov/mir24/status/week7/goldin.html

-more-

NASA Satellites Provide Best View Yet of El Nino Weather Phenomena

Pacific Ocean sea-surface height measurements and atmospheric water vapor information taken from independent Earth-orbiting satellites, the Upper Atmosphere Research Satellite, the NASA Scatterometer, TOPEX/POSEIDON, and SeaWiFS have convinced scientists of what they had earlier postulated -- a full-blown El Niño condition is established in the Pacific. **http://nsipp.gsfc.nasa.gov/enso/**

Cassini Launches to Saturn

The international Cassini mission left Earth bound for Saturn on Oct. 15 atop an Air Force Titan IV-B/Centaur rocket in a picture-perfect launch above Cape Canaveral, FL. With the European Space Agency's Huygens probe and a high-gain antenna provided by the Italian Space Agency, Cassini will arrive at Saturn July 1, 2004.
http://www.jpl.nasa.gov/cassini/

X-33 and X-34 Flight Technology Demonstrators Achieve Major Milestones

In 1997, the Agency's quest to reduce launch costs and increase access to space through its Reusable Launch Vehicle Program took a major leap forward. The X-33 technology demonstrator, scheduled to begin flights in mid-1999, successfully passed its critical design review, and the X-34, the smaller and earlier flight demonstrator being developed in parallel with the X-33, successfully passed a design freeze in mid-year.
http://stp.msfc.nasa.gov/

Galileo Discovers Icebergs on Europa

Images captured during Galileo's closest flyby of Europa on Feb. 20 showed features of the Jovian moon, lending credence to the possibility of hidden, subsurface oceans. The findings generated new questions about the possibility of life on Europa.
http://www.jpl.nasa.gov/galileo/

Uplifting Year for Aeronautics

To ensure that NASA's work in science and technology sustains U.S. leadership in civil aeronautics and space and improves air transportation system safety, the Agency established technology goals, called the Three Pillars, that will stretch the boundaries of the knowledge and capabilities needed to keep the United States as the global leader in aeronautics and space. **http://www.hq.nasa.gov/office/aero/**

SOHO Sheds New Light on Active Sun

Scientists using the joint European Space Agency/NASA Solar and Heliospheric Observatory (SOHO) spacecraft have discovered "jet streams" or "rivers" of hot, electrically charged plasma flowing beneath the surface of the Sun. These new findings will help scientists understand the famous 11-year sunspot cycle and associated increases in solar activity that can disrupt the Earth's power and communications systems.
http://sohowww.nascom.nasa.gov/

For the latest news and information about NASA, please visit TODAY@NASA at URL:
http://www.hq.nasa.gov/office/pao/NewsRoom/today.html

-end-

News Release

National Aeronautics and
Space Administration
Washington, DC 20546
(202) 358-1600

For Release

Jennifer McCarter
Headquarters, Washington, DC
(Phone: 202/358-1639)

December 9, 1997

Edward Campion
Johnson Space Center, Houston, TX
(Phone: 281/483-5111)

RELEASE: C97-t

CAMPBELL ENGINEERING AWARDED EVA CONTRACT

NASA's Johnson Space Center, Houston, TX, has selected and awarded contracts to Campbell Engineering and AZ Technology, Inc., both in Huntsville, AL; Hamilton Standard Management Services, Inc.; Lockheed Martin Space Mission Systems and Services; Oceaneering Space Systems; and Spar Operations & Engineering Corporation, all in Houston, TX.

The work to be provided under the contracts is for extravehicular activity and extravehicular robotics tools and equipment for the Space Shuttle Program and the International Space Station. It also includes design and fabrication support for advanced development programs, hardware upgrades, modifications, build-to-print existing extravehicular activity and extravehicular robotic hardware.

These are Indefinite Delivery/Indefinite Quantity contracts with commercial fixed price, noncommercial fixed price and cost reimbursement features. Delivery orders will be completed among the selected contractors. The contracts are for a five-year period. Each of the six contracts has a minimum value of $50,000 with a not-to-exceed value of $43.8 million. The government will not exceed a total amount of $43.8 million over all the contracts combined.

-end-

News Release

National Aeronautics and
Space Administration
Washington, DC 20546
(202) 358-1600

For Release

Debbie Rahn/Jennifer McCarter
Headquarters, Washington, DC
(Phone: 202/358-1639)

December 9, 1997

Rob Navias
Johnson Space Center, Houston, TX
(Phone: 281/483-3671)

NOTE TO EDITORS: N97-89

MIR 24 CREW NEWS CONFERENCE SET

The three Mir 24 crewmembers, including U.S. astronaut David Wolf, will hold a news conference from the Mir space station on Friday, Dec. 12, starting at approximately 10:05 a.m. EST. The news conference, to be broadcast on NASA Television, will include multicenter question-and-answer capability for reporters at participating NASA centers.

The news conference will be carried through the Russian Altair satellite during a 30-minute window for television capability from the Mir, to be transmitted to the U.S. by satellite from the Russian Mission Control Center. Interpretation will be provided for questions posed in English to the Russian crewmembers and their answers in English for members of the news media.

Mir 24 Commander Anatoly Solovyev and Flight Engineer Pavel Vinogradov have been aboard Mir since August and are scheduled to be replaced by another cosmonaut crew in late January. Wolf is nearing the end of his third month aboard the Mir. He is scheduled to be replaced in late January by astronaut Andy Thomas, who will be launched to the Mir as part of the STS-89 crew as the final U.S. astronaut to occupy the Russian outpost.

NASA Television is carried on GE-2, Transponder 9C at 85 degrees West longitude, vertical polarization, frequency 3880 Mhz, audio 6.8 Mhz.

-end-

News Release

National Aeronautics and
Space Administration
Washington, DC 20546
(202) 358-1600

Don Savage
Headquarters, Washington, DC
(Phone: 202/358-1547)

For Release
December 10, 1997

Tammy Jones
Goddard Space Flight Center, Greenbelt, MD
(Phone: 301/286-5566)

Ray Villard
Space Telescope Science Institute, Baltimore, MD
(Phone: 410/338-4514)

NOTE TO EDITORS: N97-90

NEXT SPACE SCIENCE UPDATE FEATURES STARS IN BLAZE OF GLORY

The next Space Science Update (SSU), called "Final Blaze of Glory," is scheduled for Wednesday, Dec. 17, at 1 p.m. EST. The Update will feature a dazzling collection of detailed views released by several teams of astronomers using NASA's Hubble Space Telescope. The images reveal surprisingly intricate glowing patterns spun into space by aging stars: pinwheels, lawn sprinkler style jets, elegant goblet shapes, and even some that look like a rocket engine's exhaust.

The astronomers say the incandescent sculptures are forcing a re-thinking of stellar evolution. In particular, the patterns may be woven by an aging star's interaction with unseen companions: planets, brown dwarfs, or smaller stars.

Panelists will be:

* Dr. Howard Bond, Space Telescope Science Institute (STScI), Baltimore MD
* Dr. Mario Livio, STScI
* Dr. Bruce Balick, University of Washington, Seattle
* Dr. Anne L. Kinney, Space Telescope Science Institute, Baltimore, MD
* Dr. David Leckrone, HST Project Scientist, Goddard Space Flight Center, Greenbelt, MD, panel moderator

The SSU will originate from NASA Headquarters Auditorium, 300 E St., SW, Washington, DC, and will be carried live on NASA TV with two-way question-and-answer capability for reporters covering the event from participating NASA centers.

NASA Television is broadcast on the GE2 satellite which is located on Transponder 9C, at 85 degrees West longitude, frequency 3880.0 Mhz, audio 6.8 MHz. Audio of the broadcast will be available on voice circuit at the Kennedy Space Center on 407/867-1220.

- end -

News Release

National Aeronautics and
Space Administration
Washington, DC 20546
(202) 358-1600

Don Nolan-Proxmire
Headquarters, Washington, DC
(Phone: 202/358-1983)

For Release

December 10, 1997

RELEASE: 97-282

NASA SELECTS PHASE II SMALL BUSINESS PROJECTS

NASA has selected 101 research proposals for negotiation of Phase II contract awards for NASA's Small Business Innovation Research (SBIR) Program. The selected projects, which have a total value of approximately $59 million, will be conducted by 87 small, high technology firms located in 29 states.

SBIR goals are to stimulate technological innovation, increase the use of small business (including women-owned and disadvantaged firms) in meeting federal research and development needs, and increase private sector commercialization of results of federally funded research.

A total of 320 proposals were submitted by SBIR contractors completing Phase I projects. These proposals were evaluated to determine that they met SBIR Phase I objectives and are feasible research innovations for meeting Agency needs.

Phase II continues development of the most promising Phase I projects. Selection criteria included technical merit and innovation, Phase I results, value to NASA, commercial potential, and company capabilities. Funding for Phase II contracts may be up to $600,000 for a two-year performance period.

The NASA SBIR program management office is located at the Goddard Space Flight Center, Greenbelt, MD, with executive oversight by NASA's Office of Aeronautics, NASA Headquarters, Washington, DC. Individual SBIR projects are managed by NASA field centers and the Jet Propulsion Laboratory, Pasadena, CA.

-end-

EDITOR'S NOTE: A printed listing of companies selected for the program as well as a breakout of awards by NASA center and state are available in the NASA Headquarters Newsroom (Phone: 202/358-1600). This information also may be accessed on the Internet at URL:

http://sbir.nasa.gov

News Release

National Aeronautics and
Space Administration
Washington, DC 20546
(202) 358-1600

Dwayne Brown
Headquarters, Washington, DC
(Phone: 202/358-1726)

Michael Mewhinney
Ames Research Center, Moffett Field, CA
(Phone: 650/604-9000)

Les Dorr
FAA,Washington, DC
(Phone: 202/267-3461)

For Release
December 11, 1997

RELEASE: 97-283

NASA, FAA DEVELOPING SYSTEM THAT COULD ENHANCE PRESENT COMMERCIAL AVIATION ACCIDENT PREVENTION PROGRAMS

NASA, in cooperation with the Federal Aviation Administration (FAA) is developing an automated system that could better prevent commercial aviation accidents by processing aircraft performance data -- used to troubleshoot potential future aircraft problems -- more efficiently.

The system supports a National Civil Aviation Review Commission preliminary report, presented today to U.S. Secretary of Transportation Rodney Slater, containing recommendations on how best to finance, manage, and improve the performance of the nation's civil aviation programs.

Collectively called the Aviation Performance Measuring System, it is being developed at NASA's Ames Research Center, Moffett Field, CA, and works by reducing the human labor needed to process large quantities of performance data generated by today's aircraft systems. This makes processing of the data more efficient and enhances the data collection and cost effectiveness of present safety programs of U.S. carriers.

The system monitors over 1200 operational functions of the aircraft. Some of the areas in which the system provides valuable early warnings of potential problems include performance, cockpit instrument inputs, electrical equipment, fuel, and hydraulics.

"This gives the airlines an eye on operations that they don't now have," said Linda Connell, director of FAA-NASA's Aviation Safety Reporting System, which complements the program. Funded by the FAA, the $3 million research program began in 1993 as a collaborative effort between NASA and the FAA to develop a set of tools that would allow large quantities of flight data to be processed in a highly automated fashion.

-more-

On Oct. 6, 1995, Alaska Airlines was the first air carrier to enter into an agreement with NASA for collaboration on the development of the suite of system's tools. The initial demonstration to representatives of Alaska Airlines, Airline Pilots Association, and FAA was designed to respond to the specific requirements for information identified in a user-needs study conducted by the system's project team at Alaska Airlines. On Dec. 20, 1996, United Airlines signed a similar agreement. The system's team expects to demonstrate the initial build of a United Airlines system using flight-recorded data from United's 40 A-320 aircraft early in 1998.

The system is now undergoing operational testing by Alaska Airlines' personnel, analyzing data from their first six MD-80 aircraft equipped with Quick Access Recorders. There will be a continuing process of developing future upgrades of the system as Alaska Airlines' personnel become familiar with its capabilities and have time to identify new requirements.

Under NASA's new Aviation Safety Program, the system will eventually be extended to service the needs of engineering, maintenance, and training in the airlines, and to commuter, cargo, and corporate air carriers.

"By incorporating advanced automation techniques, we can detect accident precursors we didn't know existed," said Dr. Richard Keller, research lead for intelligent systems technology. "The carriers also can use the system proactively to forestall future problems by improving training, operations and maintenance procedures," he added. At the national level, such tools could help to monitor the entire aviation system to detect areas where regulations or air traffic control operating practices need to be improved.

"The FAA has funded this research and development effort to facilitate the capability within the industry to make the best use of digital flight data on a routine basis," said Dr. Irving Statler, the system's project manager.

The system provides a prototype of a flight data analysis ground station with broad-based reporting capabilities customized to the needs and operations of U.S. airlines and includes specific provisions for technology transfer of prototype products to commercial vendors using present safety programs and technology.

Flight operations safety programs using flight-recorded data have been providing critical safety information to non-U.S. airlines for more than two decades. In cooperation with an FAA-sponsored study, four U.S. airlines initiated trial programs in 1995 that resulted in the need to improve existing off-the-shelf software to enhance the effectiveness of current safety programs of large U.S. airlines.

-end-

News Release

National Aeronautics and
Space Administration
Washington, DC 20546
(202) 358-1600

For Release

December 12, 1997

Douglas Isbell
Headquarters, Washington, DC
(Phone: 202/358-1753)

Jane Platt
Jet Propulsion Laboratory, Pasadena, CA
(Phone: 818/354-5011)

NOTE TO EDITORS: N97-91

NEWS BRIEFING WRAPS GALILEO'S SPECTACULAR PRIMARY MISSION; JOURNEY CONTINUES WITH CLOSE EUROPA FLYBY

Just six hours after NASA's Galileo spacecraft makes its closest-ever pass above Jupiter's icy moon Europa, scientists and engineers will present highlights of the spacecraft's primary mission and preview its two-year extended mission at a press briefing. The briefing, to be held on Tuesday, Dec. 16 at 1 p.m. EST, also will feature new images from Galileo's previous Europa flyby on Nov. 6, the final encounter of the primary mission. The briefing will originate from NASA's Jet Propulsion Laboratory, Pasadena, CA, and will be carried live on NASA Television, with two-way question-and-answer capability for reporters at participating NASA Centers.

Galileo concluded its historic primary mission on Dec. 7 after spending two years studying Jupiter, its magnetosphere and its four largest moons.

The spacecraft immediately embarked on a two-year extension, called the Galileo Europa Mission, with eight planned Europa flybys, four Callisto flybys and one or two Io encounters, depending on spacecraft health. Scientists hope to learn more about the tantalizing prospect that liquid oceans may lie underneath Europa's icy crust. The first flyby of the Galileo Europa Mission will take place on Dec. 16 at 7:03 a.m. EST, at an altitude of only 124 miles (200 kilometers) above Europa, with the signal reaching Earth at 7:49 a.m. EST. This will be the closest approach to any planetary body by the Galileo spacecraft.

During the primary mission, Galileo returned about one gigabyte of data and hundreds of high-resolution pictures. At the briefing, scientists will summarize key findings from the spacecraft's abundant harvest of scientific information, including:

-more-

Ganymede's magnetic field

Volcanic ice flows and melting or "rafting" on Europa's surface that support the premise of liquid oceans underneath

Studies of water vapor, lightning and aurora on Jupiter

The discovery of a hydrogen and carbon dioxide atmosphere on Callisto

The presence of metallic cores in Europa, Io and Ganymede and the lack of evidence for such a core in Callisto

High volcanic activity on Io, with dramatic changes since the Voyagers

The Galileo spacecraft entered orbit around Jupiter on Dec. 7, 1995, becoming the first mission to orbit one of the Solar System's outer planets. It also deployed a parachute-borne probe into Jupiter's outer atmosphere. JPL manages the Galileo mission for NASA's Office of Space Science, Washington, DC.

NASA Television is available through GE-2, transponder 9C at 85 degrees west longitude, vertical polarization, with a frequency of 3880 MHz, and audio at 6.8 MHz. The new images will be released on the Galileo Internet home page at the following URL:

http://www.jpl.nasa.gov/galileo/

-end-

Video Advisory

National Aeronautics and
Space Administration
Washington, DC 20546
(202) 358-1600

For Release
Dec. 15, 1997

Debbie Rivera
Headquarters, Washington, DC
(Phone: 202/358-1743)

VIDEO ADVISORY: V97-125

NASA/FAA SYSTEM IN ATLANTA LANDS AN ON-TIME DEPARTURE; NASA'S YEAR IN REVIEW

Today's video package features footage of a prototype system that reduces airline taxi departure times at Atlanta's Hartsfield International Airport by more than one minute. The Surface Movement Advisor, developed jointly by NASA and the Federal Aviation Administration (FAA), saves millions of dollars in operations costs, reduces the number of missed connections and time spent waiting for airline passengers. Also on NTV is the first installment of NASA's Year in Review that highlights the top ten stories of the year. Highlights include Mars Pathfinder, space station Mir, and El Niño. The second and third installments will run on Tuesday and Wednesday respectively. The Year in Review will be repeated throughout the next few weeks.

ITEM 1: ON TIME DEPARTURE

B-roll of Atlanta Hartsfield International Airport runways, control tower and the Surface Movement Advisor in use.

1a: **INTERVIEWS**

Two interviews discussing the Surface Movement Advisor.

For more information contact Dwayne Brown at (202) 358-1726 or Michael Mewhinney at (650) 604-9000.

ITEM 2: YEAR IN REVIEW

First installment.

Video news file today at noon, 3, 6, 9 p.m. and midnight EST.

NASA Television is available on GE-2, transponder 9C at 85 degrees West longitude, with vertical polarization. Frequency is on 3880.0 megahertz, with audio on 6.8 megahertz.

-end-

News Release

National Aeronautics and
Space Administration
Washington, DC 20546
(202) 358-1600

For Release

Dwayne Brown
Headquarters, Washington, DC
(Phone: 202/358-1726)

December 15, 1997

Michael Mewhinney
Ames Research Center, Moffett Field, CA
(Phone: 650/604-3937)

Les Dorr
FAA, Washington, DC
(Phone: 202/267-8521)

RELEASE: 97-285

NASA/FAA SYSTEM HELPING HOLIDAY AIRLINE TRAVELERS MISS FEWER FLIGHTS

Atlanta Hartsfield International, the nation's second largest airport in total passengers, is helping its holiday airline travelers miss fewer connections and wait less time for flights by using a new airport system developed by NASA and the Federal Aviation Administration (FAA).

Called the Surface Movement Advisor, the system is primarily a set of computers and software that electronically connects information constantly gathered separately by the three principal entities that make an airport run -- the local airport authority managing the airport's ramp areas, the airlines managing the gates, and the FAA's air traffic controllers. This is the first automated system that distributes each group's information to the others. Until now, these entities only occasionally had access to each other's information.

This system makes the airport run more efficiently by reducing ground operations bottlenecks, thus allowing planes to be serviced and dispatched more quickly. Since the system has been in use, it has reduced airline taxi departure times at Hartsfield by more than one minute per flight. Multiplying this minute by the thousands of daily flights in the whole flow of airport operations leads to a scenario in which passengers will less likely miss their flights and will spend less time waiting.

-more-

"There are well over 1,000 daily departures from Atlanta Hartsfield. That's at least 1000 minutes a day, or at least $40,000 to $50,000 a day saved in airline direct operating costs. That translates into an annual savings at Hartsfield of $16 to $20 million in direct operating costs," said NASA's manager for the project, Dr. Brian Glass. This means that savings could soon translate into cheaper air fares for travelers."

The FAA selected Atlanta Hartsfield International Airport in 1995 as the field test site for the system. In June 1996, Delta Air Lines, the nation's largest airline for passenger miles flown, and several other airlines began daily use of the system at Atlanta Hartsfield. Delta operates nearly 700 flights per day from Atlanta Hartsfield, which serves as its largest hub.

"With the introduction of this system at Hartsfield, our customer service has improved, which is very important for the industry as well as for the FAA," said Bill Drew, Delta's Air Traffic Control Systems Manager.

"From an industry standpoint, this system helps the air traffic community, airline community and airport community interact better together and make better collaborative operational decisions," explained Dennis Lawson, the FAA's Surface Automation Research and Development Team lead.

The system was designed by engineers at NASA's Ames Research Center, Moffett Field, CA, in collaboration with FAA engineers, air traffic controllers, and airline and airport management staffs.

-end-

News Release

National Aeronautics and
Space Administration
Washington, DC 20546
(202) 358-1600

For Release

Michael Braukus
Headquarters, Washington, DC
(Phone: 202/358-1979)

December 16, 1997

RELEASE: 97-284

NASA AWARDS MATERIALS SCIENCE RESEARCH GRANTS

NASA has selected 44 researchers to receive grants totaling more than $17 million over four years for materials science research in microgravity.

Sponsored by NASA's Office of Life and Microgravity Science and Applications, Washington, DC, the objective of the materials science research program is to expand our understanding of how materials form and how the process of formation influences the properties and usefulness of materials. This knowledge also will provide the foundation for new technology advances in electronics, medical instruments and metal castings.

Thirty-three of the grants are for ground-based research, while the remaining eleven are for flight definition projects. Nine of the grants are for continuation of work currently being funded by NASA; the remaining proposals represent new research efforts.

NASA received 214 proposals in response to this research announcement. These proposals were peer reviewed by scientific and technical experts from academia, industry and government. In addition, proposals selected for flight definition were reviewed for engineering feasibility by a team from NASA's Marshall Space Flight Center, Huntsville, AL.

The list of the grant recipients is available by calling the NASA Headquarters Newsroom at 202/358-1600 or via the Internet at URL:

ftp://ftp.hq.nasa.gov/pub/pao/pressrel/1997/97-284a.txt

- end -

News Release

National Aeronautics and
Space Administration
Washington, DC 20546
(202) 358-1600

For Release

Donald Savage
Headquarters, Washington, DC
(Phone: 202/358-1547)

December 16, 1997

Jane Platt
Jet Propulsion Laboratory, Pasadena, CA
(Phone: 818/354-5011)

RELEASE: 97-286

**CLOSEST EUROPA FLYBY MARKS
START OF GALILEO MISSION "PART II"**

NASA's Galileo spacecraft today successfully made its closest-ever flyby of Jupiter's icy moon Europa, marking the start of an extended mission that will focus on new and tantalizing scientific questions raised by its just-completed, highly successful two-year primary mission.

"Galileo has earned a place in history as the first mission to orbit an outer planet," said Dr. Wesley T. Huntress, Jr., NASA's associate administrator for space science, Washington, DC. "Galileo already has returned a wealth of new information in its two-year scientific exploration of Jupiter's atmosphere and system of moons. But the best yet may still be ahead of us as Galileo continues its mission at Jupiter with a focus on the moons Europa and Io in the next two years."

Galileo dipped over Europa at an altitude of only 124 miles (200 kilometers), with the signal received on Earth at 7:49 a.m. EST. This was the first encounter of the Galileo Europa mission, which began formally on Dec. 8, following the end of Galileo's primary mission. The Galileo Europa mission will study Jupiter's icy satellite in detail in hopes of shedding more light on the intriguing prospect that liquid oceans may lie under Europa's ice crust.

New images released today from Galileo's Europa encounter of Nov. 6 show more evidence that the moon has been subjected to intense geological deformation. The pictures show a mottled region of dark and splotchy terrain that scientists say represents some of the most recent geologic activity on Europa. It is believed the mottled appearance was created when chaotic areas of the bright, icy crust broke apart and exposed darker material underneath. The new images also show a smooth, gray band where the Europan crust has been fractured, separated, and filled in with material from the interior. Numerous isolated mountains or "massifs" are visible.

-more-

The new images represent a small portion of the 1,800 images obtained during Galileo's primary mission, including hundreds of high-resolution images of Jupiter's moons. The images and other information gathered by Galileo's science instruments have dramatically revised our knowledge of Jupiter and its moons, according to mission scientists.

The Galileo Europa mission is designed to follow up on these discoveries and will include eight consecutive Europa flybys through February 1999, followed by four Callisto flybys and one or two Io encounters in late 1999, provided the spacecraft remains healthy.

"The Galileo Europa mission really builds upon the success of the prime mission which has forced us to re-think many of our perceptions of the Jovian system," said Galileo project scientist Dr. Torrence Johnson. "We've acquired a tremendous pool of knowledge about Jupiter, its magnetosphere and its four largest moons."

The key findings of Galileo's primary mission include:

- The existence of a magnetic field on Jupiter's largest moon, Ganymede;
- The discovery of volcanic ice flows and melting or "rafting" of ice on the surface that supports the premise of liquid oceans underneath at some point in Europa's history;
- The observation of water vapor, lightning and aurora on Jupiter;
- The discovery of an atmosphere of hydrogen and carbon dioxide on the moon Callisto;
- The presence of metallic cores in Europa, Io and Ganymede and the lack of evidence of such a core in Callisto;
- Evidence of very hot volcanic activity on Io and observations of dramatic changes compared to previous observations and even during the period of Galileo's observations.

"We look forward to providing even more fascinating science results over the next two years," said newly appointed Galileo Europa mission project manager Bob Mitchell of NASA's Jet Propulsion Laboratory (JPL), Pasadena, CA.

JPL manages the Galileo mission for NASA's Office of Space Science, Washington, DC. The new images shown at today's briefing are available on the Galileo Internet home page at the following URL:
http://www.jpl.nasa.gov/galileo/

Members of the Galileo mission will answer questions from the public during a Galileo WebChat on Wednesday, Dec. 17 from 6 to 9 p.m. EST, at URL:
http://www.jpl.nasa.gov/galileo/chat/

-end-

Video Advisory

National Aeronautics and
Space Administration

Washington, DC 20546
(202) 358-1600

For Release
Dec. 17, 1997

Debbie Rivera
Headquarters, Washington, DC
(Phone: 202/358-1743)

VIDEO ADVISORY: V97-126

HUBBLE WITNESSES THE SWAN SONG OF SUN-LIKE STARS; WATER ON EUROPA?

Today's video package features spectacular views of exploding stars from NASA's Hubble Space Telescope that shows what will happen to our Sun in 5 billion years. NTV will replay Galileo's images of Europa that may indicate evidence of liquid water which could provide for the possibility for life, and was released during yesterdays' Space Science Update. Also on tap is the replay of the Surface Movement Advisor and the third installment of NASA's Year in Review.

ITEM 1: SWALLOWING STARS
ITEM 1a: TWINJET NEBULA
ITEM 1b: LEMON SLICE
ITEM 1c: EJECTED BY THE AGING STAR
ITEM 1d: THE PINWHEEL
ITEM 1e: GREEN SHELL
ITEM 1f: END OF STARS' LIVES
ITEM 1g: WHITE HOT STAR
ITEM 1h: THE SUN: FINAL BLAZE OF GLORY
An artist's concept of how our solar system might look 5 billion years from now.
ITEM 1i: INTERVIEW -- MARIO LIVIO, THEORIST, SPACE TELESCOPE
For more information call Don Savage at (202) 358-1727 or Ray Villard at (410) 338-4514.
ITEM 1j: STARS OF WONDER -- MUSIC VIDEO
ITEM 2: IMAGES FROM GALILEO SPACE SCIENCE UPDATE (12/16/97)
For more information call Stephanie Zeluck at (818) 354-5011.
ITEM 3: REPLAY - SURFACE MOVEMENT ADVISOR
ITEM 4: YEAR IN REVIEW

Video news file today at noon, 3, 6, 9 p.m. and midnight EST.

NASA Television is available on GE-2, transponder 9C at 85 degrees West longitude, with vertical polarization. Frequency is on 3880.0 megahertz, with audio on 6.8 megahertz.

News Release

National Aeronautics and
Space Administration

Washington, DC 20546
(202) 358-1600

For Release

December 17, 1997

Donald Savage
Headquarters, Washington, DC
(Phone: 202/358-1547)

Tammy Jones
Goddard Space Flight Center, Greenbelt, MD
(Phone: 301/286-5566)

Ray Villard
Space Telescope Science Institute, Baltimore, MD
(Phone: 410/338-4514)

RELEASE: 97-287

HUBBLE WITNESSES THE FINAL BLAZE OF GLORY OF SUN-LIKE STARS

The end of a sun-like star's life was once thought to be simple: the star gracefully casting off a shell of glowing gas and then settling into a long retirement as a burned-out white dwarf.

Now, a dazzling collection of detailed views released today by several teams of astronomers using NASA's Hubble Space Telescope reveals surprisingly intricate glowing patterns spun into space by aging stars: pinwheels, lawn sprinkler style jets, elegant goblet shapes, and even some that look like a rocket engine's exhaust.

"These eerie fireworks offer a preview of the final stage of our own Sun's life," says Bruce Balick of the University of Washington, Seattle. More than simply a stellar "light-show," these outbursts provide a way for heavier elements --predominantly carbon -- cooked in the star's core, to be ejected into interstellar space as raw material for successive generations of stars, planets and, potentially, life.

The astronomers say the incandescent sculptures are forcing a re-thinking of stellar evolution. In particular, the patterns may be woven by an aging star's interaction with unseen companions: planets, brown dwarfs, or smaller stars.

"The first time we looked at the Hubble's breathtaking pictures, we knew that our older and simpler ideas of how these objects are formed had to be overhauled," said Howard Bond of the Space Telescope Science Institute (STScI), Baltimore MD. "The basic question is: How do these nebulae shape themselves?"

-more-

"Hubble's colorful views are a feast for the eyes," said Mario Livio, also of the STScI. "Their beauty is matched only by the mystery."

Surprising new details revealed by the Hubble pictures include:

* Unexplained disks and "donuts" of dust girdling a star, which pinch outflowing gas. These may be linked to the presence of invisible companions.

* Remarkably sharp, inner bubbles of glowing gas -- like a balloon inside a balloon -- blown out by the violently outflowing gases called a "fast wind" (1000 miles/sec) ejected during the final stages of a star's death.

* Strange, glowing "red blobs" placed along the edge of some nebulae may be chunks of older gas caught in the stellar gale of hot flowing material from the dying star.

* Jets of high-speed particles that shoot out in opposite directions from a star, and plow through surrounding gas, like a garden hose stream hitting a sand pile.

* Pinwheel patterns formed by symmetrical ejection of material so that intricate structures are mirrored on the opposite side of a star.

"We're still reveling in the quality of the data and the wealth of new details. In the longer term, we're going to have to confront these strikingly symmetric structures with some fundamentally revised ideas about the final stages of a star's life," said Balick. "The lovely patterns of gas argue that some highly ordered and powerful process orchestrates the ways stars lose their mass, completely unlike an explosion."

A long-standing puzzle is how these nebulae acquire their complex shapes and symmetries. The red giant stars that preceded their formation should have ejected simple, spherical shells of gas. "Hubble's ability to see very fine structural details -- usually blurred beyond recognition in ground-based images -- enables us to look for clues to this puzzle," said Balick.

Several teams of astronomers will be observing planetary nebulae using new infrared instruments installed on the Hubble Telescope last February. This way, astronomers can glimpse the ejection of material at a very early stage long before the expelled nebula starts to become visible optically. Given Hubble's high resolution, astronomers also hope to revisit the same nebula in a few years to actually see how the shell has further expanded into space. Their observations will be compared to predictions and either refine or dismiss current ideas on the mass ejection mechanisms of dying stars.

"These nebulae observed by Hubble give us a preview of our own Sun's fate. Some five billion years from now, after the Sun has become a red giant and burned the Earth to a cinder, it will eject its own beautiful nebula and then fade away as a white dwarf star," warned Bond.

-more-

The Space Telescope Science Institute is operated by the Association of Universities for Research in Astronomy, Inc. (AURA) for NASA, under contract with the Goddard Space Flight Center, Greenbelt, MD. The Hubble Space Telescope is a project of international cooperation between NASA and the European Space Agency (ESA).

-end-

EDITOR'S NOTE: Photos and captions are available to news media by calling the Headquarters Broadcast and Imaging Branch at 202/358-1900.

Color:	B&W:
97-HC-802	97-H-802
97-HC-803	97-H-803

Images also are available at:

http://oposite.stsci.edu/pubinfo/PR/97/38.html and via links in
http://oposite.stsci.edu/pubinfo/Latest.html or
http://oposite.stsci.edu/pubinfo/Pictures.html.

Video Advisory

National Aeronautics and
Space Administration

Washington, DC 20546
(202) 358-1600

For Release
Dec. 18, 1997

Debbie Rivera
Headquarters, Washington, DC
(Phone: 202/358-1743)

VIDEO ADVISORY: V97-127

WHAT'S WITH EL NINO NOW?

Today's video package contains a comprehensive look at the evolution of El Nino. Included in the feed are new images of the key elements of the phenomenon: sea level, temperature and wind changes. A new 3-D image and side-by-side comparisons of the 1982-83 and 1997 El Nino events are part of the package. Replays for today include the Hubble Space Telescope images of exploding sun-like stars, new pictures of Mir from the German spacecraft, Inspector and NASA's Year in Review (part 1).

ITEM 1: EL NINO, 1997
ITEM 1a: SEA LEVEL ANOMALIES
ITEM 1b: TEMPERATURE ANOMALIES
ITEM 1c: WIND ANOMALIES
ITEM 1d: 3-D EL NINO UPDATE
ITEM 1e: COMPARE AND CONTRAST
ITEM 1f: SIDE BY SIDE COMPARISON
ITEM 1g: NEW PIX FROM TOPEX-POSEIDON
ITEM 1h: GALAPAGOS (REPLAY)
ITEM 1i: IMAGE FROM SEA VIEWING WIDE FIELD SENSOR (REPLAY)
ITEM 1j: FIRES OVER INDONESIA (REPLAY)
ITEM 1k: ANIMATION OF TOPEX-POSEIDON (REPLAY)
ITEM 1l: ANIMATION OF SEA VIEWING WIDE FIELD SENSOR (REPLAY)
ITEM 1m: INTERVIEWS ON EL NINO

For more information call Wade Sisler at (301) 286-6256 or Stephanie Zeluck at (818) 354-5011.

ITEM 2 REPLAY - HST'S IMAGES FROM SPACE SCIENCE UPDATE
ITEM 3: REPLAY - MIR INSPECTOR
ITEM 4: REPLAY - YEAR IN REVIEW (PART 1)

Video news file today at noon, 3, 6, 9 p.m. and midnight EST.

NASA Television is available on GE-2, transponder 9C at 85 degrees West longitude, with vertical polarization. Frequency is on 3880.0 megahertz, with audio on 6.8 megahertz.

Video Advisory

National Aeronautics and
Space Administration

Washington, DC 20546
(202) 358-1600

Debbie Rivera
Headquarters, Washington, DC
(Phone: 202/358-1743)

For Release
Dec. 29, 1997
(NOTE AIR DATE ABOVE)

VIDEO ADVISORY: V97-128

GREETINGS FROM UP YONDER; NASA 1997

Today's video package has New Year greetings from Astronaut David Wolfe aboard the Mir space station. The file also provides a 55-second look at NASA's 1997 accomplishments set to music. NTV will continue its replay of NASA's Year in Review.

ITEM 1: HAPPY NEW YEAR FROM MIR
Greetings from David Wolfe.

ITEM 2: NASA 1997
A music video of the year's accomplishments.

ITEM 3: REPLAY - NASA'S YEAR IN REVIEW

Video news file today at noon, 3, 6, 9 p.m. and midnight EST.

NASA Television is available on GE-2, transponder 9C at 85 degrees West longitude, with vertical polarization. Frequency is on 3880.0 megahertz, with audio on 6.8 megahertz.

-end-